Wood Sci Technol (2016) 50:463–474
DOI 10.1007/s00226-016-0805-5

ORIGINAL

The influence of log soaking temperature on surface quality and integrity performance of birch (*Betula pendula* Roth) veneer

Anti Rohumaa[1] · Toni Antikainen[1] · Christopher G. Hunt[2] · Charles R. Frihart[2] · Mark Hughes[1]

Received: 24 March 2015 / Published online: 20 February 2016
© Springer-Verlag Berlin Heidelberg 2016

Abstract Wood material surface properties play an important role in adhesive bond formation and performance. In the present study, a test method was developed to evaluate the integrity of the wood surface, and the results were used to understand bond performance. Materials used were rotary cut birch (*Betula pendula* Roth) veneers, produced from logs soaked at 20 or 70 °C prior to peeling and followed by drying at 160 °C. Surface quality was evaluated through surface roughness measurement, SEM imaging, lathe check depth evaluation and surface integrity testing. The results show that soaking logs at 70 °C rather than at 20 °C before peeling produced veneers with decreased surface roughness, shallower lathe checks and better integrity. All these parameters are mainly affected by the lathe check depth, which is observed on the loose side of veneer. On the tight side of veneer, the only detectable differences were the mode of cell wall failure observed under SEM, and the greater amount of very fine particles loosely bound to the surface. Higher soaking temperature also produced a surface with "hairy" structure and larger surface area, which could promote strong adhesive bond development. The surface integrity measurements were found to be very useful for evaluating the quality of veneer surfaces.

✉ Anti Rohumaa
anti.rohumaa@aalto.fi

[1] Department of Forest Products Technology, School of Chemical Technology, Aalto University, Vuorimiehentie 1, 02150 Espoo, Finland

[2] US Forest Service, Forest Products Laboratory, One Gifford Pinchot Drive, Madison, WI 53726, USA

Introduction

When manufacturing wood veneer, it is common to heat the logs before peeling them in order to soften the material and lower the cutting forces (Marchal et al. 2009; Dupleix et al. 2013b). In addition to ease of peeling, it has been demonstrated that in certain species soaking at elevated temperature followed by peeling can also lead to improved adhesive bond strengths when using certain resins (Aydin et al. 2006; Rohumaa et al. 2014). At present, the mechanisms behind the increase in bond strength after soaking and peeling of logs at high temperature are not fully understood, but amongst the many factors affecting bond quality, one feature that stands out is surface roughness (Sinn et al. 2004; Aydin and Colakoglu 2005; Aydin et al. 2006; Dundar et al. 2008; Bekhta et al. 2014). Most studies have demonstrated that higher soaking or peeling temperatures will decrease surface roughness (Lutz 1960; Aydin et al. 2006); however, some studies show the reverse (Corder and Atherton 1963). The differences between studies might be explained by the diverse measurement techniques used or by the different roughness magnitude measured. However, determination of surface roughness is complicated because roughness is greatly influenced by the anatomical structure of wood as well as the mechanical machining conditions (Sinn et al. 2009; Bekhta et al. 2014). Typically, the surface roughness of wood has been measured using the stylus method (Sinn et al. 2004; Aydin and Colakoglu 2005; Aydin et al. 2006; Dundar et al. 2008; Bekhta et al. 2014); however, this approach might not adequately characterize the surface roughness/quality of wood materials relevant to bonding because of a weak boundary layer. Stehr and Johansson (2000) suggested that the wood bond quality is negatively affected by a weak boundary layer which is a result of wood processing and which can limit adhesive bond formation with intact wood. It is well known that for good bonding the adhesive should penetrate into the wood (Kamke and Lee 2007; Modzel et al. 2011) and securely anchor to the undamaged layer of wood (Frihart 2009). Furthermore, it is known that veneer processing can shred the surface and affect bulk material properties by crushing cells and creating lathe checks (Chow 1974; Rohumaa et al. 2013; Pot et al. 2015). These loosely attached wood particles and checks could affect bond performance and cause premature failure if the adhesive does not penetrate into the wood properly (Neese et al. 2004; Rohumaa et al. 2013). Partly the effect of log soaking or peeling temperature on bond strength can be explained by the depth of the lathe checks, which should be shallower when peeling at higher temperature (Dupleix et al. 2013a) and shallower checks are less detrimental to bond strength (Rohumaa et al. 2013).

Another method to evaluate (qualitatively) the wood surface is scanning electron microscopy (SEM) (Bekhta et al. 2014). Microscopic techniques provide a useful way of imaging a fracture surface and give valuable information, but as a means of measuring surface roughness they are not able to identify or quantify the particles that are loosely attached. In other words, microscopy does not give adequate information about weak boundary layer and the integrity of the surface, i.e. the ability of the surface layer to resist being torn away from the veneer. Currently there

is no standard procedure or adequate technique available for measuring the integrity of wood surfaces.

The aim of the present study was to develop a method to measure the integrity of the wood surface and to evaluate the effect of log soaking temperature on veneer surface quality affecting the bonding process using this method. Surface quality was evaluated through surface roughness measurement, SEM imaging, lathe check depth evaluation and surface integrity measurements with a modified tape test used generally in internal bond testing of paper and paperboard.

Materials and methods

Veneer material preparation

The veneers used in this study were from the same material as described previously by Rohumaa et al. (2014). A freshly felled birch (*Betula pendula* Roth) stem was sectioned into logs nominally 1.2 m in length and completely immersed in water tanks heated to either 20 °C or 70 °C. The core temperature of the logs was monitored using embedded thermocouples. The logs remained immersed until the core had attained the target temperature and had remained there for at least 12 h. Following soaking, the logs were rotary cut (cutting speed 100 m min^{-1}, knife bevel angle 21°, compression rate 10 %) on an industrial scale lathe (Model 3HV66; Raute Oyj, Lahti, Finland) into veneer with a nominal thickness of 0.8 mm. The initial settings of rotary cutting were kept the same for both soaking temperatures and are originally developed by industry using logs soaked at about 35 °C. The veneer was visually inspected, and specimens approximately 900 mm by 400 mm, free from obvious defects such as knots or sloping grain, were cut from the veneer ribbon. Only the veneer peeled after the first 15 rotations of the log was used in the study. The specimens were subsequently dried at 160 °C in a laboratory scale veneer dryer (Raute Oyj, Lahti, Finland) to an average final moisture content (MC) of 6 %. The veneers were conditioned at 20 °C and 65 % RH prior to testing. For the lathe check depth (LCD) and roughness measurements, 20×117 mm^2 specimens were cut from the veneer sheets. Four groups of veneer surfaces were created: (a) the loose side of veneer from logs soaked at 20 °C (20L); (b) the tight side of veneer from logs soaked at 20 °C (20T); (c) the loose side of veneer from logs soaked at 70 °C (70L); and d) the tight side of veneer from logs soaked at 70 °C (70T).

Lathe check depth

The lathe checks depth (LCD) of veneers was measured using a stereo microscope (Wild MZ8, Leica, Wetzlar, Germany) and National Instruments, Vision Assistant 7.1 image processing software. The checked side (loose side) of the veneer sample was dyed with textile dye "tulip red" (Dylon, Spotless Group, Paris, France). After dyeing, the specimens were conditioned at 20 °C and 65 % RH for 12 h. The veneer specimens were cut across the grain direction (20 mm) to reveal the checks in the

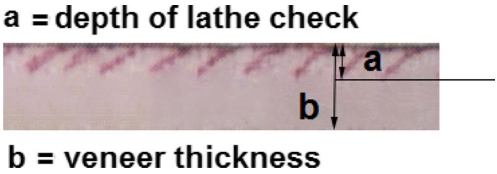

Fig. 1 Overview of veneer lathe check depth (LCD) measurement

transverse direction. The depth of all checks (Fig. 1) in specimens was measured (Eq. 1), and the average check depth percentage (%) was calculated for each group.

$$LCD = \frac{a}{b} \times 100\,(\%) \tag{1}$$

where (a) is the depth of lathe check and (b) is the thickness of veneer.

SEM

For SEM, veneer samples 5 × 5 × 0.8 mm^3 were mounted onto aluminium stubs with silver double-sided sticky tape and gold coated using a Denton Desk-1 sputter coater (Cherry Hill, NJ). Samples were examined and photographed at 10 kV at a working distance of 12 mm with a LEO EVO40 SEM (Carl Zeiss SMT Inc., Thornwood, NY) at 72-1000× magnifications.

Surface roughness

A Mitutoyo Surftest 402 (Mitutoyo Europe GmbH, Neuss, Germany) was used to evaluate the roughness of the veneer surface across the grain. Cut-off length was 2.5 mm, sampling length was 12.5 mm, and the detector tip radius was 5 µm according to EN ISO 3274 (1996). The roughness parameters R_a, R_{max} and R_z were obtained, where R_a is the arithmetic mean deviation of the profile, R_{max} the maximum two point height of the profile and R_z the height of the profile irregularities in ten points (ISO 468 1986).

Surface integrity

Veneer surface integrity was tested with a Huygen internal bond tester (model 1314, Huygen Corporation, Wauconda, IL, USA) by attaching firstly double-sided tape (P-02, Nitto Denko Corporation, Osaka, Japan) to the veneer surface with constant pressure and then using the same device to separate the tape from the veneer surface. This form of internal bond tester is generally used to produce a high speed Z-direction rupture in paper and paperboard. In this modification here, the test veneer was fixed between a stainless steel sample base and an aluminium angle using the double-sided tape by applying a constant pressure of 0.12 MPa for 5 s. After pressing, a pendulum, held in a horizontal position by an electromagnet, is released and it strikes the vertical leg of the aluminium angle and the impact separates the tape from the veneer (Fig. 2) allowing an observation of the attached wood particles on the tape surface, which area is 25.4 × 25.4 mm.

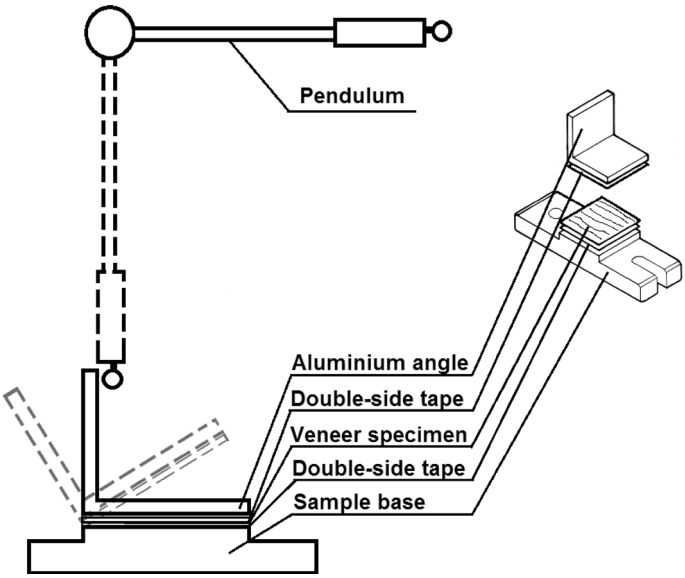

Fig. 2 Sample preparation for integrity testing and separation of tape from the veneer surface

Fluorescence microscopy

Fluorescence microscopy was used to evaluate the quantity and size of loose particles on the veneer surface. One set of veneer surfaces was dyed with a 1 % solution of acridine orange before surface integrity testing (see previous section). After testing, fluorescence images of the particles adhering to the tape were obtained using a Leica DMLAM (Leica Microsystems GmbH, Wetzlar, Germany) light microscope modified by installing a TV zoom lens and removing the objective. A Leica DC300 colour digital camera captured the images and processing was done in the Leica Application Suite software. The specimens were illuminated with a blue LED (wavelength 470 nm) and the Leica L4 filter set was used. Image analysis has been conducted on obtained images (6×6 mm^2) with MATLAB 2013b software. Wood showed up as bright particles, allowing the number and size of particles to be calculated based on pixels. To improve consistency of results, only earlywood regions were included in the analysis presented here.

Data analysis

The significance of the differences between the means of the different treatments was evaluated by analysis of variance (ANOVA). Differences amongst means were compared and segregated by Tukey's test ($P < 0.05$).

Results

Previous studies have shown that the soaking temperature of logs influences wettability and bond strength in birch wood veneer when using a phenol–formaldehyde adhesive (Rohumaa et al. 2014) and that the depth of lathe checks has a strong influence on the shear strength of the resulting plywood (Rohumaa et al. 2013). In this study, the effect of soaking temperature on veneer lathe check depth (LCD), surface roughness and the integrity of the surface was investigated using veneers from the same material as used in a previous study by Rohumaa et al. (2014).

Given that lathe checks can weaken the wood veneer macroscopically, the presence of checks and their characteristics was used as the first level of examination. The LCD of veneers from logs soaked at 20 °C was 23.7 % of veneer thickness vs. 16.0 % for veneers from logs soaked at 70 °C (Table 1). According to the data analysis, the groups were statistically different, suggesting that soaking temperature does have an effect on LCD.

Moving to the finer disruption of the wood surface that occurs on both sides of the veneer, the roughness parameters show similar values for most groups, with the only exception being group 20L where the roughness values were higher (Table 1). The roughness values of all other surfaces (70L, 70T and 20T) were indistinguishable.

On an even finer level of examination, scanning electron microscopy showed evidence that more disrupted wood cell wall elements exist on the surfaces of veneer peeled from logs soaked at higher temperature (Fig. 3b, d, f). These differences are mainly visible only at lower (72–100×) magnification (Fig. 3) and could not be easily distinguished at higher magnification (300–1000×) (Fig. 4) because of the smaller fields of view inherent at larger magnification. However, higher magnification more clearly shows a flatter surface in the veneers peeled at the lower temperature (Fig. 4a, c, e). In contrast, higher soaking temperature causes the cell wall elements to fail, resulting in a more "hairy" surface structure (Fig. 4b, d, f).

The integrity of the attachment between the surface particles and the bulk veneer was evaluated by pulling tape off the veneer and evaluating the quantity and size of particles attached to the tape that had been briefly brought into contact with the wood surface prior to removal. Particles removed by tape were not well connected

Table 1 Effect of soaking temperature on roughness and lathe checks depth of veneer

Sample codes	Soaking temp. (°C)	Average roughness values (μm)				
		Veneer side	LCD (%)	R_a	R_{max}	R_z
20T	20	Tight		7.44a (1.44)	62.32a (9.95)	48.25a (6.80)
20L		Loose	23.7a (6.5)	9.19b (2.32)	67.30b (11.35)	53.34b (8.27)
70T	70	Tight		7.99a (1.17)	64.62a (10.23)	51.36a (6.13)
70L		Loose	16.0b (3.8)	7.99a (1.42)	63.54a (11.87)	48.66a (7.15)

a, b indicate significantly different groups using Tukey's test at $\alpha = 0.05$

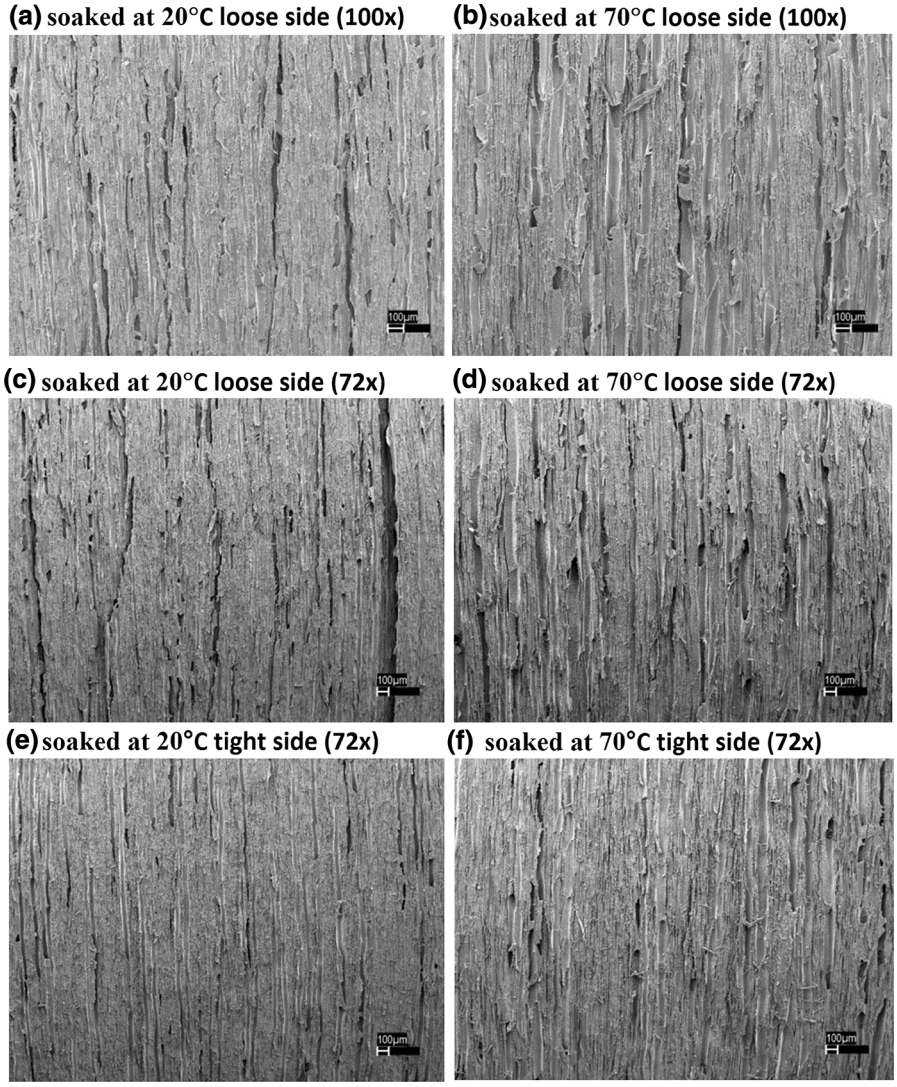

Fig. 3 Effect of soaking temperature on topography of veneer (loose and tight side)

to the veneer substrate and are thus potential weak points in the adhesive bond. Illustrative images are presented in Fig. 5. The tape pulled off of veneer 20L (Fig. 5a) contains much larger wood particles than any of the other surfaces, though there are some large particles on surface 70L (Fig. 5b). Loose particles form 7.8 % of the surface of 20L, whilst for 70L it was half this amount 3.6 % (Fig. 5). The size of particles in 20T and 70T looks very similar in Fig. 5 and most of the size classes in Fig. 6. However, there are twice as many of the smallest particles on the surfaces of 70T compared to 20T (Fig. 6a). Whilst large, weakly attached particles were

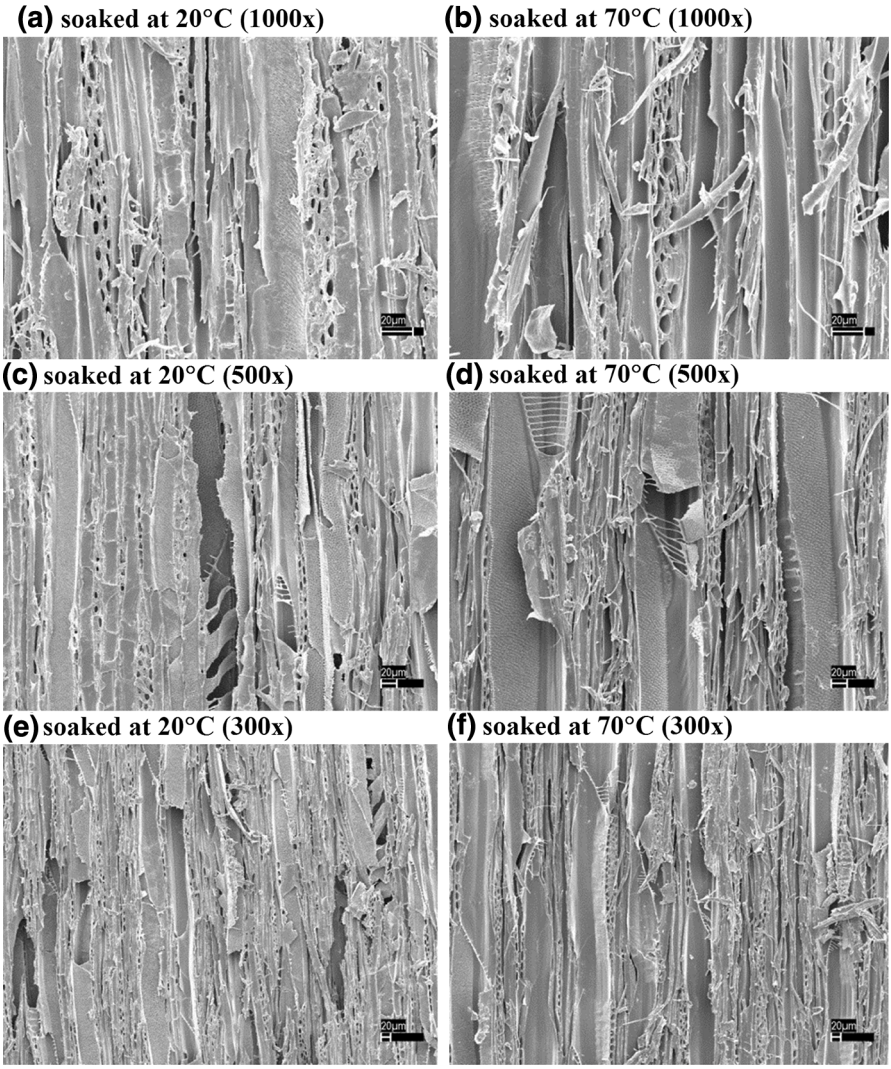

Fig. 4 Effect of soaking temperature on topography of veneer (loose side)

almost exclusively seen on the loose side, the loose side also had more debris of every size than the tight side. According to Fig. 6, the particles could be divided into three classes, where Fig. 6a shows mainly the smaller particles formed by the disruption of cell wall and forming the "hairy" surface structure; these particles are generally with the size less than 0.005 mm^2. Large particles (Fig. 6b, c) are formed by pulling of the weakly attached lathe checks and their size is generally greater than 0.045 mm^2. The area of loosely attached large particles depends mostly on the area used in evaluation; the greater the area, the larger the particle size.

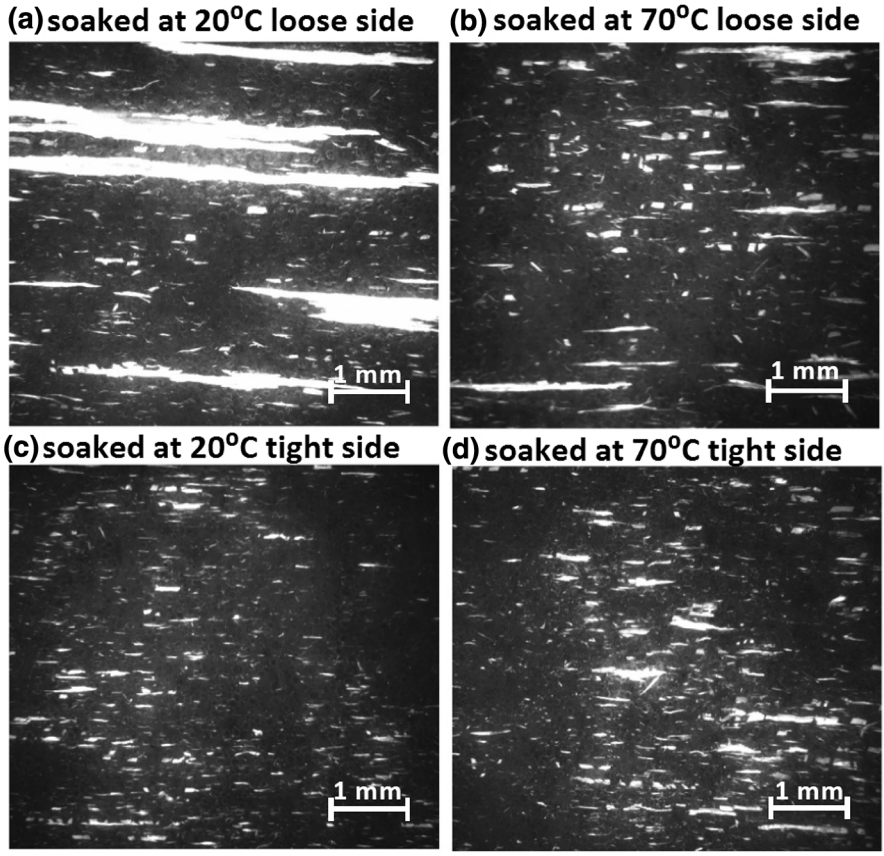

Fig. 5 Effect of soaking temperature on loosely attached particle size and quantity on veneer surfaces from the integrity test (visualized with fluorescence microscopy)

Discussion

Though the 20 and 70 °C soaked logs were peeled under exactly the same conditions, the LCD was significantly lower in veneer peeled from logs soaked at the higher temperature. As discussed by Rohumaa et al. (2013), during plywood shear strength testing, deep lathe checks can initiate mode I failure. This suggests that reducing the LCD by heating logs before peeling could have a direct benefit in terms of plywood strength by minimizing the initiation of glue line failure under the mode I. Another impact of LCD appears to be on the ability of the tape to remove large bundles of fibres from the surface, as observed in the integrity testing (Figs. 5a, 3b). Not surprisingly, deeper lathe checks resulted in larger bundles of loose fibres being removed. If an adhesive will fail to "heal" these checks by flowing deeply into them, they could form the locus of failure as described by Rohumaa et al. (2013).

Low magnification SEM images suggest qualitatively different surfaces as a function of soaking temperature, whilst the tape test appears to confirm this through

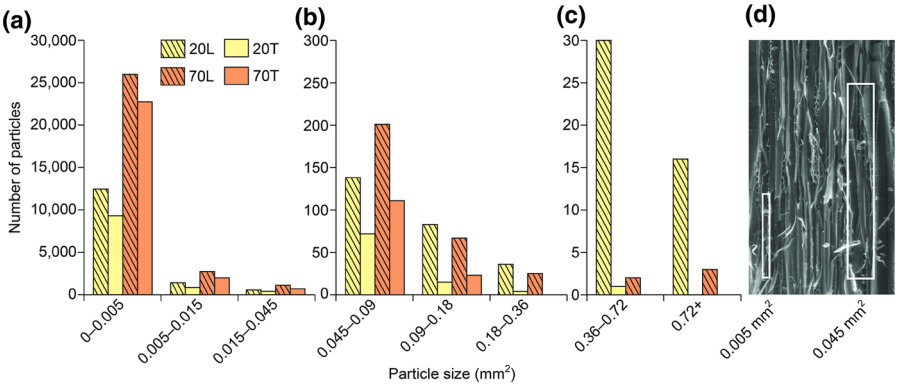

Fig. 6 Effect of veneer side and soaking temperature on particle size and quantity results from the integrity test. *Histograms* showing number of particles in each size range **a** veneers peeled at 70 °C have large number of small particles on both faces; **b** medium size wood fragments are more common on loose side of veneers; **c** large wood fragments are characteristic of the loose side of veneer peeled at the lower temperature; **d** 3D perspective of particle size in **a** and **b** histograms

the differences in the amount of very small loosely attached material. The smaller number of off-axis, partially attached fibres suggests more brittle wood cleavage at lower temperature, compared to the tearing action at the higher temperature characteristic of ductile failure. This tearing at higher temperature will cause cell wall elements to fail and produce surfaces with a "hairy" structure and larger surface area. The larger surface available for interaction with the adhesive could potentially yield a stronger bond (Marra 1992) especially if the extra surfaces are well connected to the underlying veneer. When the surface is loose, however, it could be expected to degrade bond quality. It is expected the small loose particles observed with SEM and the tape test not to harm bond quality nearly as much as the large fibre bundles characteristic of veneer 20L and to a lesser extent 70L. This is because the adhesive easily gets behind the small loose particles, effectively reattaching them to the underlying veneer. Adhesive must flow a much longer distance, however, to get behind large fibre bundles, leaving open a higher likelihood that these regions will remain weak even after bonding.

The stylus method, whilst finding a difference between the 20 and 70L surfaces, was the least useful of the methods employed here because it was difficult to understand where the roughness originated from and the connection between roughness as measured by stylus and plywood bond strength is not at all clear.

Conclusion

The surface integrity measurement technique developed here seems to be very useful for evaluating the quality of wood surfaces, which in turn affect adhesive bond formation and performance. The results show that soaking temperature clearly affected the lathe check depth, which has previously been shown to have a direct impact on plywood shear strength. Soaking temperature also had some effect on the

roughness of the loose side of the veneers, but does not have a significant effect on the roughness of the tight side measured by the stylus method. Observation by SEM and surface integrity testing revealed that the lower soaking temperature causes a more brittle failure type and fewer small (<0.045 mm^2) particles on surface. In contrast, many more small particles were available on the tight and loose side of veneer soaked at the higher temperature. The new integrity test also showed that large fibre bundles were easily removed from the loose side of the veneers peeled at 20 °C, which also had deeper lathe checks. The number of weakly attached surface particles was higher on the loose side in every size class and at both temperatures.

Acknowledgments Authors would like to acknowledge the financial assistance provided by the Finnish Funding Agency for Technology and Innovation (Tekes) and industry. Warm thanks are extended to staff at the US Forest Service, Forest Product Laboratory in Madison.

References

Aydin I, Colakoglu G (2005) Effects of surface inactivation, high temperature drying and preservative treatment on surface roughness and colour of alder and beech wood. Appl Surf Sci 252:430–440

Aydin I, Colakoglu G, Hiziroglu S (2006) Surface characteristics of spruce veneers and shear strength of plywood as a function of log temperature in peeling process. Int J Solids Structures 43:6140–6147

Bekhta P, Proszyk S, Krystofiak T, Mamonova M, Pinkowski G, Lis B (2014) Effect of thermomechanical densification on surface roughness of wood veneers. Wood Mat Sci Eng 9:233–245

Chow S (1974) Lathe-check influence on plywood shear strength. Canadian forest service, Vancouver BC, Information report VP-X-122:24

Corder SE, Atherton GH (1963) Effect of peeling temperature on Douglas-fir veneer. Information circular 18, Oregon State University, Corvallis, USA

Dundar T, As N, Korkut S, Unsal O (2008) The effect of boiling time on the surface roughness of rotary-cut veneers from oriental beech (*Fagus orientalis* L.). J Mater Process Technol 199:119–123

Dupleix A, Denaud L, Bleron L, Marchal R, Hughes M (2013a) The effect of log heating temperature on the peeling process and veneer quality: beech, birch, and spruce case studies. Eur J Wood Wood Prod 71:163–171

Dupleix A, Meneses DDS, Hughes M, Marchal R (2013b) Mid-infrared absorption properties of green wood. Wood Sci Technol 47:1231–1241

EN ISO 3274 (1996) Geometrical product specifications (GPS). Surface texture: Profile method. Nominal characteristics of contact (stylus) instruments. The European Standard

Frihart CR (2009) Adhesive groups and how they relate to the durability of bonded wood. J Adhes Sci Technol 23:601–617

ISO 468 (1986) Surface roughness. Parameters, their values and general rules for specifying requirements. International Organization for Standardization

Kamke FA, Lee JN (2007) Adhesive penetration in wood—a review. Wood Fiber Sci 39:205–220

Lutz J (1960) Heating veneer bolts to improve quality of Douglas-fir plywood. Tech Rep No 2182 US Department of Agriculture, Forest Service, Forest Products Laboratory Madison, USA

Marchal R, Mothe F, Denaud L, Thibaut B, Bleron L (2009) Cutting forces in wood machining–Basics and applications in industrial processes. A review COST Action E35 2004–2008: Wood machining–micromechanics and fracture. Holzforschung 63:157–167

Marra AA (1992) Technology of wood bonding: principles in practice. Van Nostrand Reinhold, New York

Modzel G, Kamke F, De Carlo F (2011) Comparative analysis of a wood: adhesive bondline. Wood Sci Technol 45:147–158

Neese JL, Reeb JE, Funck JW (2004) Relating traditional surface roughness measures to gluebond quality in plywood. For Prod J 54:67–73

Pot G, Denaud L, Collet R (2015) Numerical study of the influence of veneer lathe checks on the elastic mechanical properties of laminated veneer lumber (LVL) made of beech. Holzforschung 69(3):227–345

Rohumaa A, Hunt CG, Hughes M, Frihart CR, Logren J (2013) The influence of lathe check depth and orientation on the bond quality of phenol-formaldehyde–bonded birch plywood. Holzforschung 67:779–786

Rohumaa A, Hunt CG, Frihart CR, Saranpää P, Ohlmeyer M, Hughes M (2014) The influence of felling season and log-soaking temperature on the wetting and phenol formaldehyde adhesive bonding characteristics of birch veneer. Holzforschung 68:965–970

Sinn G, Gindl M, Reiterer A, Stanzl-Tschegg S (2004) Changes in the surface properties of wood due to sanding. Holzforschung 58:246–251

Sinn G, Sandak J, Ramananantoandro T (2009) Properties of wood surfaces–characterisation and measurement. A review COST Action E35 2004–2008: wood machining–micromechanics and fracture. Holzforschung 63:196–203

Stehr M, Johansson I (2000) Weak boundary layers on wood surfaces. J Adhes Sci Technol 14:1211–1224