Occupational Exposure Characterization during the Manufacture of Cellulose Nanomaterials

Abstract. *The forest products industry accounts for approximately 6% of total U.S. manufacturing output; nanotechnology could play an increasing role. As with any emerging technology, cellulose nanomaterials may become commercially available in a range of products before society obtains sufficient knowledge of the risk they pose to workers, consumers, and the environment. In partnership with the Forest Products Laboratory, the National Institute for Occupational Safety and Health conducted an exposure characterization study of the production of cellulose nanocrystals (CNC) that had been tagged with cesium. Analyzing the filter-based air samples for elemental cesium indicated that CNCs are being aerosolized during both removal of product from the freeze dryer and centrifugation of product. The highest concentration for the cesium-tagged CNC was collected during the centrifugation process inside the enclosure cabinet. Currently there are no occupational exposure limits specific to engineered cellulose nanomaterials.*

Keywords. Cellulose nanocrystals, CNC, nanocrystalline cellulose, occupational exposure.

Kenneth F. Martinez[1], Adrienne Eastlake[1], Alan Rudie[2] and Charles Geraci[1]

[1]National Institute for Occupational Safety and Health. Cincinnati, OH 45244
[2]Forest Products Laboratory, USDA, US Forest Service

Introduction. Nanotechnology promises enhanced societal benefits through innovation and improvement of consumer products in various industries, including agriculture, automotive, biomedical, energy, environmental, food, materials, and semiconductors. By 2015, approximately $3.1 trillion in manufactured goods or 15% of global manufacturing output will involve nanotechnology, according to one widely quoted estimate [1]. However, the product enhancements resulting from unique properties at the nanoscale (strength, electrical conductivity, thermal resistance, and chemical reactivity) may also demonstrate different biological activity compared with larger particles of the same material. As particle size decreases, a greater proportion of atoms are available on the particle surface, which can affect surface reactivity and toxicological properties. This potential toxicological significance should be met with cautious risk management strategies to provide a safe and healthy environment for a growing manufacturing workforce. The total number of workers involved in nanotechnology is growing, with estimates projecting 6 million workers employed worldwide by 2020 and 2 million jobs in the United States [2].

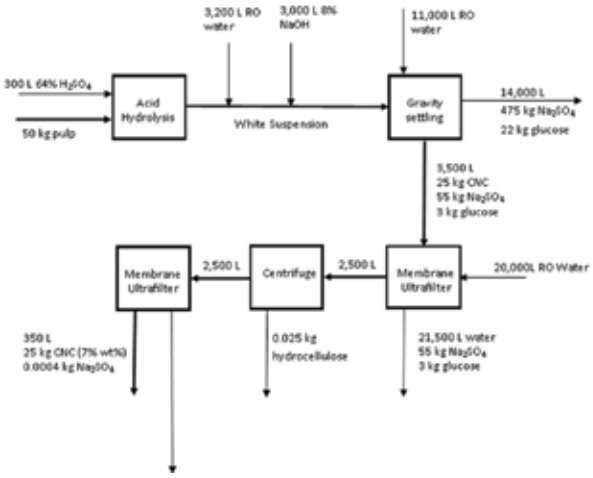

Figure 1. *Experimental processing diagram of the pilot plant method.*

The forest products industry currently represents approximately $260 billion of the U.S. economy while accounting for 6% of the U.S. manufacturing output. It employs more than 900,000 workers, includes more than 400 U.S. production facilities, and ranks in the top 10 in manufacturing in 46 out of 50 states [3]. As with many manufacturing sectors, nanotechnology has the potential to play a significant role in the future of the forest products industry. The unique mechanical, optical, and surface properties of cellulose nanocrystals (CNC) and fibrils (CNF) could have application in composites (bioplastics and reinforced polymers), porous materials (high efficiency filters, insulation, and packaging), energy (batteries and super-capacitors), photonic devices, membranes, and coatings.

Emerging technologies often develop before appropriate knowledge has been obtained on the risks to the workers, consumers, or the environment and nanocellulose is no exception [4]. Exposure to nanocellulose can occur through inhalation, ingestion or dermal routes.

Figure 2. *Centrifuge with task-based air sampling systems at appropriate source locations.*

The number of toxicity studies performed and published on nanocellulose is limited. After acute exposure to microfibrillated cellulose, mouse macrophages and human monocyte-derived macrophages were found to have no evidence of inflammation or cytotoxic effects [5]. De Lima *et al*. found that nanofibers derived from different plants could have different effects; brown cotton and curaua cellulose nanofibers caused breaks in genetic material and were genotoxic in animal cells (human lymphocytes and mouse fibroblasts) [6]. Clift *et al*. determined that, compared to multi-walled carbon nanotubes, cotton cellulose nanofibers elicited a significantly ($p < 0.05$) lower inflammatory and cytotoxic response [7].

Although the health risks of inhaling nanocellulose have not been well studied, several occupational exposure limits (OEL) have been established for bulk cellulose particles based on a gravimetric analysis. The OSHA PEL is 15 mg/m^3 for total dust and 5 mg/m^3 for respirable dust, both expressed as time-weighted averages (TWA). The NIOSH recommended exposure limits (REL) are TWA 10 mg/m^3 and TWA 5 mg/m^3 respirable, and the ACGIH Threshold Limit Value® (TLV) is TWA 10 mg/ m^3. There is currently no immediately dangerous to life and health (IDLH) level available for cellulose exposure. These limits are primarily based on the potential for irritation of cellulose particles to eyes, skin, or mucous membranes.

A respirable mass-based REL for bulk cellulose exposure provides a benchmark for judging exposures, but caution must be used because of the potential for health effects not related to the bulk material. Based on studies of other engineered nanomaterials, there is a potential for increased toxicity from exposure to nanocellulose compared to the bulk cellulose product. For example, NIOSH is concerned that other poorly soluble, low-toxicity nanoparticles may have similar health effects to those observed for titanium dioxide. Ultrafine titanium dioxide particles were observed to be more carcinogenic and inflammogenic on a mass basis than fine titanium dioxide [8]. Therefore, a mass-based bulk cellulose REL may not be sufficient to protect workers against nanomaterials that can behave differently than the larger bulk solid particles. Further kinetic and toxicological research is necessary to understand further the toxicological nature and potential health effects as a result of chronic exposure to nanocellulose.

Methodology. As part of its nanotechnology research agenda, NIOSH created a field studies team to assess workplace processes, materials, and control technologies associated with nanotechnology and conduct on-site assessments of potential occupational exposure to a variety of nanomaterials. The team was tasked with expanding knowledge of the research, production, and use of engineered nanomaterials through the establishment of collaborative partnerships with public- and private-sector producers and users. These partnerships provide opportunities for on-site investigations that enable NIOSH to observe and to understand better the variety of processes used in nanomaterial workplaces and to determine whether and in what concentrations these processes release nanoparticles.

The goals of the Nanotechnology Field Studies Team (NFST) team are to evaluate:

- *The entire material flow of a process and to identify points of potential emission that can result in worker exposure.*
- *An array of field-portable instruments and conventional air-sampling methods to characterize exposures.*
- *Engineering controls and their effectiveness in reducing emissions and exposures to engineered nanomaterials.*
- *Specific work practices used during the production or use of nanomaterials.*
- *Personal protective equipment in use, if any, including respiratory protection.*

The NFST's workplace assessment technique can be applied by practicing industrial hygienists to identify nanoparticle emissions and characterize exposures. It enables a quantitative evaluation of processes and tasks in the workplace where releases of engineered nanoparticles (ENM) may occur. The NFST uses several sampling approaches simultaneously with the goal of obtaining several qualitative and quantitative particle metrics, including the number, concentration, size, shape, degree of agglomeration, and mass concentration of elemental constituents. Measurements are also collected to assess the effectiveness

of engineering control systems. The sampling approach includes time-integrated, filter-based air samples, direct instrument readings, and surface sampling.

Filter-based air samples are collected during specific tasks and processes to determine the possible presence and quantity of a nanomaterial, as well as in non-production areas to determine background concentrations. Full-shift samples are also collected to determine a worker's cumulative exposure. Personal breathing zone (PBZ) samples are collected as close as possible to the subject's breathing zone (e.g., the lapel of a lab coat), while area samples are collected outside, but close to the evaluated process. Area samples are collected to provide an indication of fugitive process emissions and potential occupational exposures. Task-based exposures are assessed with short-term samples to identify work practices that can contribute significantly to overall exposure patterns and to prioritize control strategies.

As the core component of the exposure assessment strategy, time-integrated air samples are collected both for elemental mass and for electron microscopy analysis. This holistic approach to air sampling provides a confident estimate of the existence of nanoparticles, even in the absence of a cellulose-specific validated sampling and analytical method. Nanoparticles contribute little to the collected overall mass, and therefore electron microscopy, being more sensitive, may identify the existence of nanomaterials where elemental mass analysis cannot.

Direct instrument readings are also used to provide supplemental data on emissions and concentration trends. This information can then be used to obtain a better understanding of engineering control efficacy and work practices. The NFST uses a combination of direct-reading instruments including condensation particle counters, optical particle counters and sizers (OPS), and dust monitors to characterize a broad range of aerosol particles. Instrument selection is in part based on portability and availability to practicing industrial hygienists. All direct-reading instruments currently in use by the NFST operate as aerosol photometers. These instruments pass a collected aerosol through an illuminated field in a known volume of air and then detect the total light scattered by all particles in that volume. Together, these instruments provide an indication of the concentration of particles ranging from 10 nanometers to greater than 15 micrometers. The OPS and dust monitor are capable of differentiating particle (or mass) concentrations by size. However, none of the direct-reading instruments currently in use by the NFST is material specific.

Surface sampling (e.g., wipe samples) provides an indication of material dispersion throughout a facility. Identification of nanomaterials on work surfaces indicates that the process is emitting the material, while presence of the parent material may indicate emissions before production of the nanomaterial.

Results. CNC and CNF present unique challenges for sampling and analysis of environmental samples. A validated analytical method for elemental mass does not exist for cellulose; therefore, electron microscopy provides the only practical analytical strategy for detection and visualization of nanocellulose. However, filter preparation for electron microscopy can present complications for the analysis. For example, clearing of a mixed-cellulose ester filter for analysis by transmission electron microscopy would be damaging to any nanocellulose that had collected on the filter.

The U.S. Department of Agriculture Forest Service Forest Products Laboratory (FPL) aims to support, develop, and commercialize the emerging market for plant-derived renewable nanomaterials like nanocellulose. A pilot plant project, which is a scaled-up version of a reaction that was first publicized in 1949 [9,10], was evaluated by the NFST in partnership with FPL (Fig. 1). The CNCs generated are roughly 5 nanometers (nm) in diameter and 200 nm long. Based on the chemistry of the process, the product can be tagged by ion exchange. To increase the ability of NFST to detect and identify CNCs, FPL agreed to tag the CNC product with cesium for use during evaluation of certain tasks. Four separate processes in the production of CNC were observed: CNC production (digestion and neutralization); membrane filtration; centrifugation of cesium-tagged product slurry; and removal of dried cesium-tagged product from a freeze dryer. The CNC production and membrane filtration processes did not contain cesium-tagged product.

Task-based samples were collected during several process steps, including the reaction, dilution and neutralization, ultrafiltration, centrifugal clarification, and dried product handling. Eleven open-face 25 mm, 0.8 µm porosity, mixed-cellulose ester filters were collected for elemental analysis. Seven samples found a detectable concentration of cesium. The concentration of cesium ranged from non-detectable to 11.6 $\mu g/m^3$. A sample collected inside a cabinet that was partially enclosed during the operation of the centrifuge (Fig. 2) contained the highest airborne concentration of cesium, 11.6 $\mu g/m^3$. The second-highest airborne concentration of cesium was collected just outside the cabinet (close to the product collection drum) while the centrifuge was running (0.16 $\mu g/m^3$). The personal breathing zone sample collected from the centrifuge operator yielded an airborne concentration of 0.14 $\mu g/m^3$ of cesium. The background levels of cesium were found to be 0.07 $\mu g/m^3$ on the day that centrifugation of tagged product took place. The samples collected during removal of product from the freeze dryer had concentrations of 0.016 $\mu g/m^3$ (located on the freeze dryer), 0.03 $\mu g/m^3$ (located about two feet away from the product removed from the tray), and 0.03 $\mu g/m^3$ (personal breathing zone of the operator). The five samples collected

during digestion, neutralization, and membrane filtration did not have detectable concentrations of cesium. Elemental analysis (cesium) results for the filter-based air samples indicate that CNCs were being aerosolized during both removal of product from the freeze dryer/trays and centrifugation of product. The highest concentration of cesium-tagged CNC was collected inside the cabinet during the centrifugation process. Because of a process improvement, FPL no longer uses the centrifuge, and clarification is now accomplished using a cartridge filter. The dispersal of particles into the air was due mainly to the design of the specific centrifuge used and is not common to all centrifuges.

Conclusions. Currently there are no occupational exposure limits specific to engineered cellulose nanomaterials. As with many nanomaterials, the size and surface area of the CNC nanoparticles may be a critical factor with respect to toxicological risks and biological effects. Therefore, it is good practice to keep exposures to new and uncharacterized materials as low as possible. Although gravimetric samples were not collected, data from direct instrument readings suggest that no applicable occupational exposure limits for cellulose was exceeded by any of the air samples. Tagging the CNC with cesium proved to be informative for understanding potential occupational exposures in the absence of a cellulose-specific validated sampling and analytical method. As part of a prudent risk management approach, it is best practice to keep exposures as low as possible and conduct worker exposure monitoring until more is known about these materials.

References

[1] Lux Research, Inc. The Nanotech Report: investment overview and market research for nanotechnology, 5th Edition. New York, NY (2007).

[2] Mihail, C., Mirkin, A., Hersam, M. Nanotechnology research directions for societal needs in 2020: retrospective and outlook. World Technology Evaluation Center (WTEC) Panel Report, National Science Foundation (2010).

[3] Forest Products Laboratory. How does nanotechnology apply to forest products research? US Forest Service, Retrieved from http://www.fpl.fs.fed.us/research/research_emphasis_areas/howdoesitapply.php?rea_id=4&view_id=2 – so (2013).

[4] Howard, J., Murashov, V. National nanotechnology partnership to protect workers. Journal of Nanoparticle Research 11:1673–1683 (2009).

[5] Vartiainen, J., Pöhler, T., Sirola, K., *et al*. Health and environmental safety aspects of friction grinding and spray drying of microfibrillated cellulose. Cellulose 18(3):775–786 (2011).

[6] De Lima, R., Feitosa, L., Maruyama, C., *et al*. Evaluation of the genotoxicity of cellulose nanofibers. International Journal of Nanomedicine 7:3555–3565 (2012).

[7] Clift, M., Foster, E., Vanhecke, D., *et al*. Investigating the interaction of cellulose nanofibers derived from cotton with a sophisticated #D human lung cell coculture. BioMacromolecules 12:3666–3673 (2011).

[8] Current Intelligence Bulletin 63. Occupational exposure to titanium dioxide. National Institute for Occupational Safety and Health (2011).

[9] Rånby, B. Aqueous colloidal solutions of cellulose micelles. Acta Chem. Scand. 3: 649–650 (1949).

[10] Immergut, E. and Rånby, B. Heterogeneous acid hydrolysis of native cellulose fibers. Industrial & Engineering Chemistry 48(7):1183–1189 (1956).

Production and Applications of Cellulose Nanomaterials

Compiled and Edited by:
Michael T. Postek
Robert J. Moon
Alan W. Rudie
and
Michael A. Bilodeau

Cellulose nanocrystals incorporated within the overcoat varnish of the cover!

Copyright© 2013 by

TAPPI PRESS
15 Technology Parkway South
Suite 115
Peachtree Corners, GA 30092 U.S.A.
www.tappi.org
All rights reserved

The Association assumes no liability or responsibility in connection with the use of this information or data, including, but not limited to, any liability or responsibility under patent, copyright, or trade secret laws. The user is responsible for determining that this document is the most recent edition published.

Certain portions of this book may not be reproduced, stored in a retrieval system, or transmitted by any means – electronic, mechanical, photocopying, recording, or otherwise – without the written permission of the copyright owner. Other portions of this book were written and/or prepared by U.S. Government employees on official time and are therefore in the public domain and not subject to copyright.

To obtain copyright permission to photocopy pages from this publication for internal or personal use, or to use excerpts from this publication in another published work, contact Copyright Clearance Center, Inc. (CCC) via their website at www.copyright.com. If you have questions about the copyright permission request process, please contact CCC by phone at +1-978-750-8400.

ISBN: 978-1-59510-224-9
TAPPI PRESS Order Number: 0101R332
Printed in the United States of America