Simplified Analytical Model of a Covered Burr-Arch-Truss Timber Bridge

By

F. Fanous
Professor
Iowa State University
Ames, Iowa, USA
fanous@iastate.edu

D. Rammer
Research Engineer
Forest Product Laboratory
Madison, WI, USA
drammer@fs.fed.us

T. Wipf
Professor and Chair
Iowa State University
Ames, Iowa, USA
tjwipf@iastate.edu

Summary

Due to the importance of historical timber covered bridges throughout history, their preservation is necessary. However, conducting an accurate structural evaluation of these types of bridges has always caused difficulties to bridge engineers. This paper summarizes an investigation that was sponsored by the Federal Highway Administration and the USDA Forest Products Laboratory to develop a simple but accurate analytical model to analyze Burr Arch Truss bridges. A three dimensional model that included the splice joints that were used in the construction of the bridge was utilized in the analysis. The analysis was carried out using the STAAD finite element software.

The displacement and strain results that were obtained from the analytical models were compared to those measured in the field. The finite element results compared well with the field measured results if one models the connections and the eccentricities that existed at the connectivity between timber members.

Keywords: historical, timber, Burr-Arch, bridge, finite element, splice joints, joint eccentricities.

1. Introduction

During the 19th century, the economic material to build bridges was timber due to its abundant availability, cost, and ease of construction. Thousands of timber covered bridges were built during the 19th and early 20th centuries [5], yet a relative small number remain today. The top four surviving timber bridge types are the Burr arch, Town lattice; Howe, Queen and king type of trusses. These types of bridges have many of the same characteristics, but each is uniquely different enough to cause concern when evaluating the structural behavior of each bridge. These differences add some complexity to accurately analyze these types of bridges. For example, there are several eccentric connections, various load paths, connection uncertainty between the subassemblies (trusses and arches), and interaction between the trusses and their housing. When these are combined with material variability, it is easy to question the use of simplified truss analysis to design these types of bridges. This is recognized in the Federal Highway Administration's (FHWA) Covered Bridge Manual [9]. The manual states that there are inconsistencies with the assumptions of traditional simple static analysis of these covered bridges using simple analysis of trusses.

This manuscript summarizes the results of using a simple but more accurate analytical technique for the analysis of historic covered timber bridges. The STAAD [8] finite element program was utilized to accomplish this objective by analyzing the Zacke Cox Burr Arch Bridge, and was validated using the results that are documented in a report of the field study [6].

2. Analysis of Zacke Cox Covered Bridge

2.1 Bridge Descriptions

The Zacke Cox Covered Bridge is located in Parke County, Indiana. Elevation and end view photographs of the bridge are shown in Figure 1. The bridge was originally built in 1908 by Joseph A. Britton and its roof and deck were replaced in 1989. The deck was again replaced in 1991 and the bridge was restored in 2002 [7].

The Zacke Cox Bridge is a one lane, single span, simply supported double Burr arch truss with an approximate measure of 51 ft. and 2 in from the centerlines of the two end bearings. The truss consists of rectangular parallel chords, concentric arches enclosing the truss, two member lower chords, one member upper chord, one member diagonal and one member vertical. A schematic of the truss elevation is provided in Figure 2. Currently, the bridge is rated and posted for a thirteen ton load limit [2].

Fig. 1 Different views of the Zacke Cox Bridge

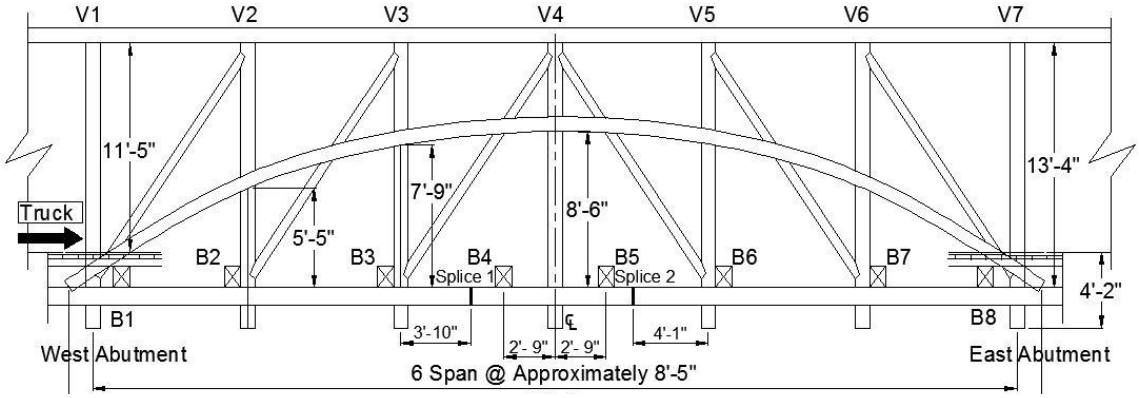

Fig. 2 Elevation view of the Zacke Cox Bridge

Table 1 summarizes the measured dimensions of each structural member used within the bridge and analytical models.

Table 1 Measured member dimensions

Structural Member	Width (in.)	Height (in.)
Bottom Chord (2)	5 ½	11 ½
Floor Beam (new)	10 ½	13 ¾
Verticals	7 ½	9 ½
Diagonals	7 ½	7 ½
Arch (2)	7 ¾	9 ½
Top Chord	7 ½	9 ¾
Stringers	5	5 ½

Due to the natural limitations of timber, splices are used to connect two timber members to create the bottom or top chords of the truss structure. The Zacke Cox Bridge utilizes single headed hook fishplate and iron shoe splice joints within the bottom chord. There are two such splice joints in the Zacke Cox Bridge. These joints are located one on each side of the center, i.e., between verticals V3-V4 and V4- V5 as shown in Figure 3.

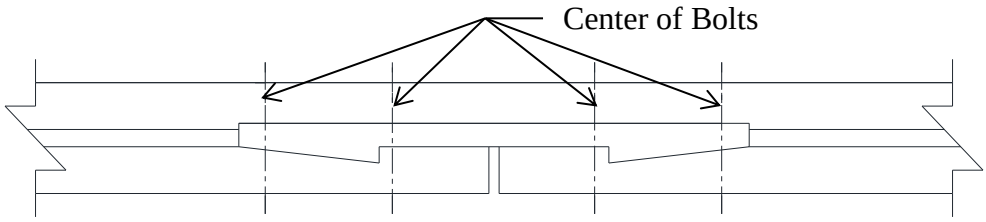

Fig. 3 Plan view of bottom chord splice joint between V3 and V4

2.2 Vehicles Used for the Field Test

Fig. 4 Picture of large test vehicle

The two vehicles were used in the field testing but the analysis presented within will focus on the larger vehicle in Figure 4. This larger truck had a front axle weight of 447.5 kN, a rear axle weight of 68.7 kN, and a center to center axle spacing of 3.07m. The trucks were driven across the bridge down the center of the structure at a slow rate, approximately five miles per hour, to simulate static loading conditions.

2.3 Bridge Instrumentation

The locations of the BDI [1] strain sensors are shown in Figures 5 below (the listed numbers are used to identify the location of each sensor) for the south and north trusses; respectively. Unimeasure PX string potentiometers were used to measure the global vertical displacements at the mid and quarter span locations. Shown in Figure 6 are the locations of the strain sensors that were used near the splice joint in the bottom chord of the north truss. All measurements were recorded at 20 samples per second per sensor. More details regarding the field test of the bridge is given reference [6]. The truss top chord was spliced at verticals V2, V4 and at V6.

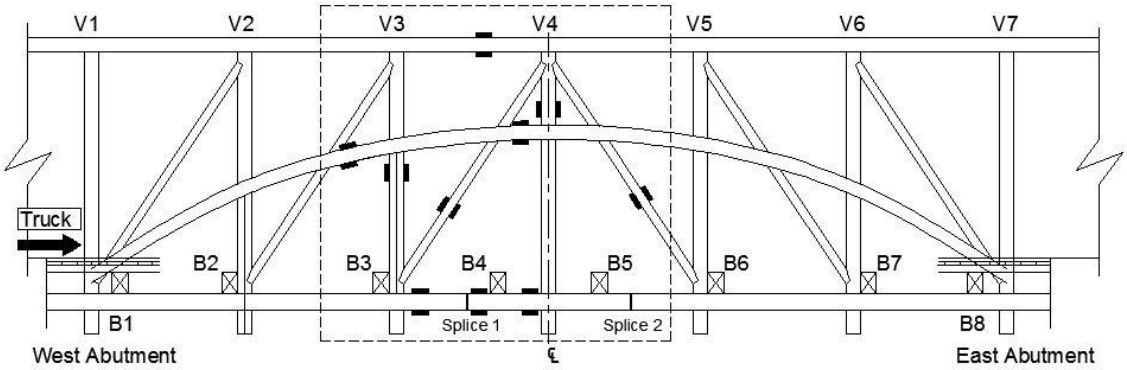

i) Instrumentation layout

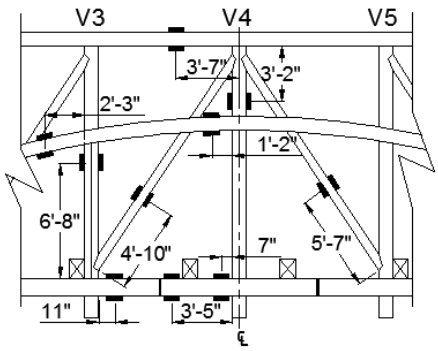

ii) Strain sensor locations

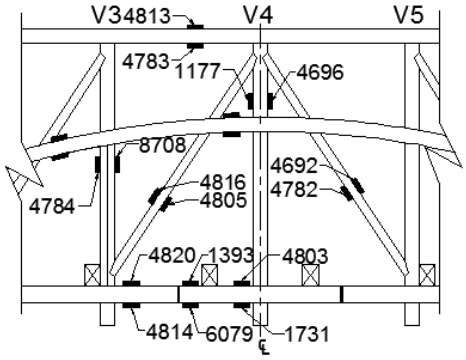

iii) Strain sensor details

Fig. 5 South truss strain sensor locations

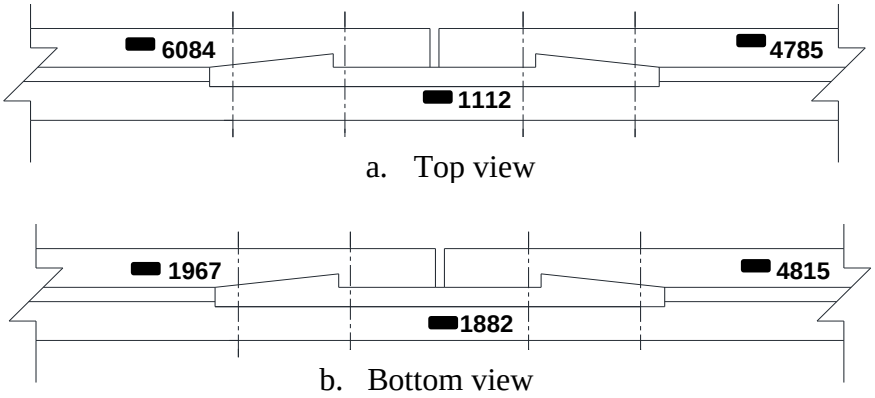

a. Top view

b. Bottom view

Fig. 6 Strain sensor locations near splice1 between vertical V3 and V4

3. Analysis of the Zack Cox Bridge

3.1 Finite Element Model

The STAAD computer software was selected to perform the analysis of the covered timber bridges studied in this work. This program was selected due to its simplicity in creating the required input file, to model the splice connections and to simulate a moving load.

The bridge was analyzed using three dimensional idealizations (Fig. 7) of a single truss. Internal hinges were included in this model to represent the connectivity between the different members. The locations of these internal hinges are indicated with open circles in Fig.7. The splice joints were included in the three dimensional model by releasing the moment in the bottom chord members at the corresponding location of the splices. One end of the truss was assumed to be pinned, while roller support was imposed at the other end. The two ends of the arch were assumed to be pinned.

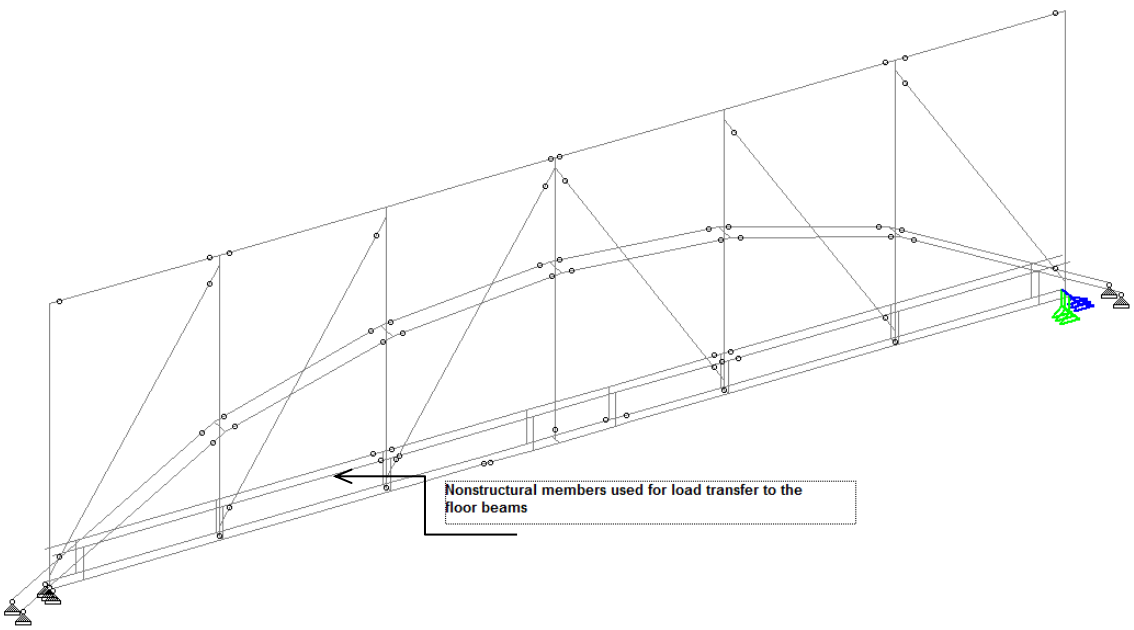

Fig. *7 STAAD three dimensional finite element model of the Zacke Cox Bridge*

The bridge model was loaded using the moving load option available in the STAAD program. To transfer the moving load to the truss bottom chord at the locations of the floor beam, it was necessary to add at the deck level, two longitudinal beams that were not part of the bridge structure. These members were added to facilitate the application of the moving loads. Each of these beams was connected using rigid links to the truss bottom chord at the locations of the floor beams. The properties of these beams were arbitrarily selected to match the dimensions of the two stringers that were used in the bridge.

The wood material was determined to be Eastern Hemlock and a modulus of elasticity of 8.27 GPa was assigned from the Wood Engineering Handbook [4]. For anatomical analysis of wood samples the trees species was identified as Tsuga. This species information, bridge location, and the Atlas of United States Trees [9] lead to the Eastern Hemlock selection. Steel bolts were assigned an elastic modulus value of 200 GPa.

3.2 Boundary Conditions and Loading

Visual inspection in the field indicated that the truss structure could be characterized as a simply supported structure while the arch portion of the bridge structure was pinned at each end.

The truck load was applied on the bridge using the moving load option available in the STAAD program. The truck axles were positioned on the bridge deck at several locations to emulate the strain and displacement data recorded in the field test.

4. Analysis Results and Discussion

4.1 Displacement at Mid-span

Shown in Figure 8 is a comparison between the average measured and the calculated displacements at the midpoint of the bridge structure. As previously mentioned, in an ideal situation the measured displacements in the north and south trusses should be similar. Therefore, the average of the two measured displacements was utilized in the comparison used in Figure 8. The results summarized in Figure 8 shows that the average measured displacement is in good agreement with the analytically calculated displacement.

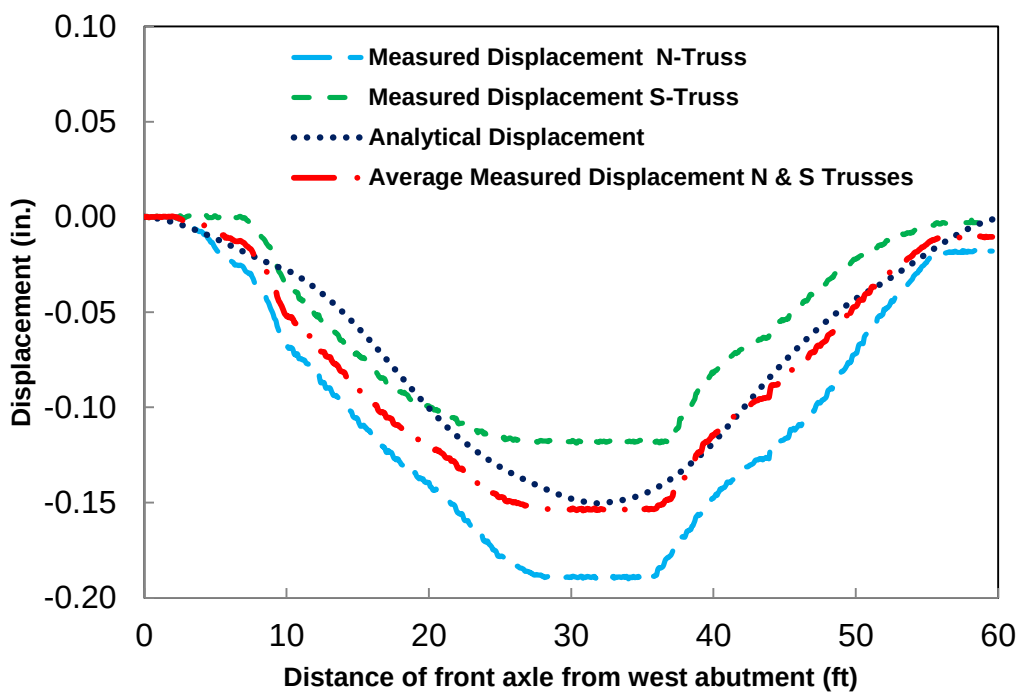

Fig. 8 Field measured and STAAD analytical displacement at mid-span

4.2 Displacements the Vicinity of the Splice Joint 1

Figure 9 illustrates the displaced shape of the bridge as the rear axle of the large truck was positioned on floor beam B4, just to the right of splice joint 1 (see Fig. 5). The figure shows the localized effects of the splice joints. As can be noticed, there is a discontinuity in the displaced shape of the bottom chord spliced member in the vicinity of splice joint 1. In addition, it can be noticed in Figure 9 that the two parts of the spliced bottom chord experience negative curvatures, i.e., they are concave downward. This indicates that the top surface of the two members to the left and right of the splice joint are subjected to tensile strains. However, one must realize that the degree of this curvature depends largely on the ability of the splice joint to transfer moment from one side to the other. Similar behavior was verified by the recorded field strain data. The field data indicated that the tensile strains in the top face of the bottom chord that were recorded by sensor 6084 was several times larger than the strains recorded by sensor 1697 on the bottom of the chord (see Fig. 6).

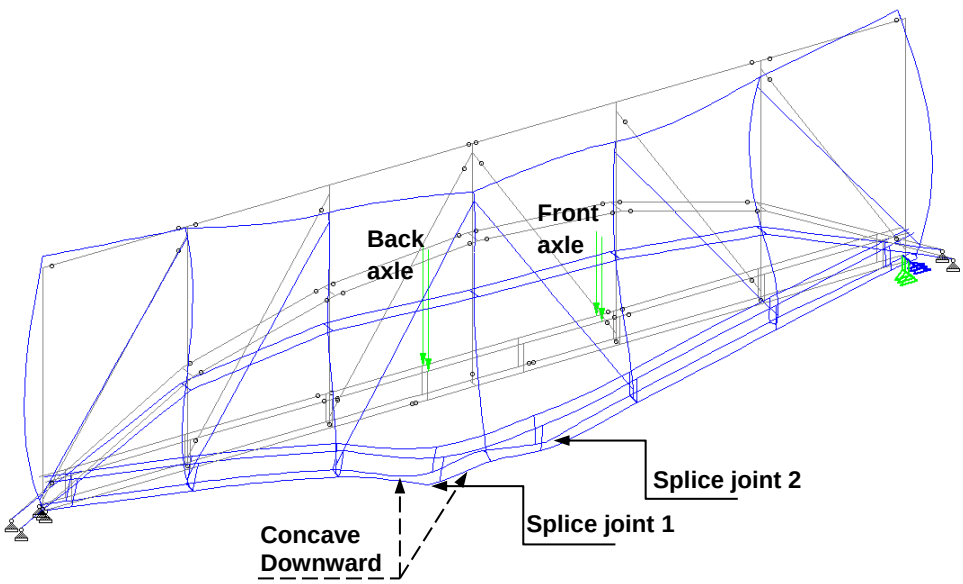

Fig. 9 Deflected shape of the Zacke Cox Bridge – large truck front axle to the right of splice joint 1

4.3 Comparison of Analytical and Field Strains

Figures 10 shows the measured and analytical strains at the top and bottom of the diagonal members located to the right and left of the middle vertical member V4. A small icon showing the location for which the strains were recorded is shown on the figures.

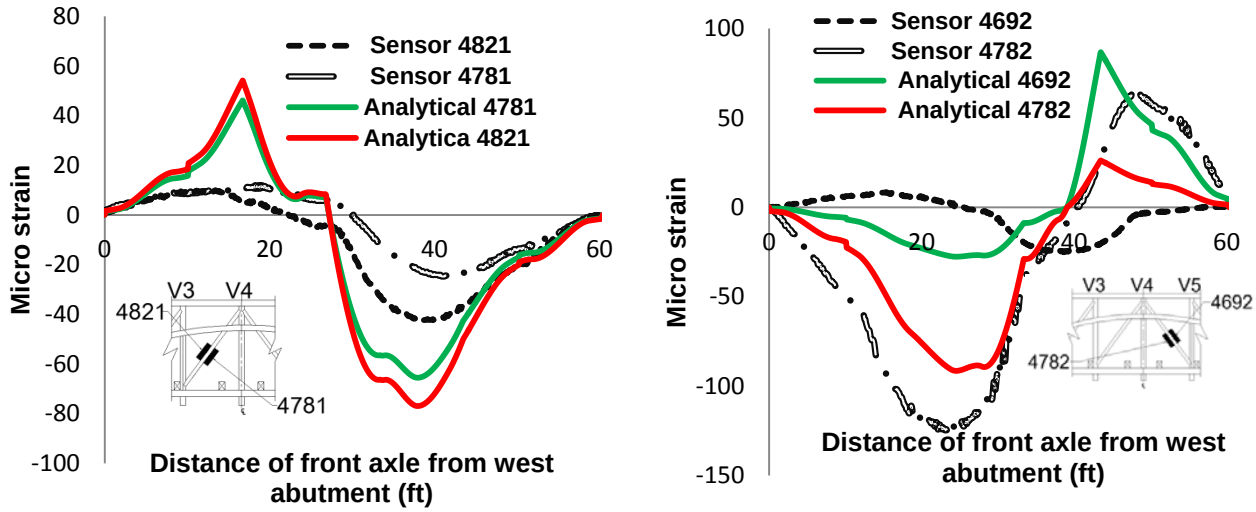

Fig. 10 Analytical and field strains in the diagonal just to the left and right of the middle post of the north truss

Fig. 11 Connection between V4 and the two diagonal members at the center span of the bridge

The differences in the strain magnitudes in the figures above are likely due to the inherent eccentricity within the joints at both ends of these members. The photo in Fig 11 shows a connection detail between vertical member V4 and the two diagonal members at the top chord panel point. Also, Fig. 11 shows that a gap exists between the vertical member V4 and the diagonal member located between vertical V4 and V5 resulting in an additional eccentricity at the joint. The eccentricity at these connections will induce bending moments at each end of these diagonal members. To include this type of detail in a finite element model, one needs to use 3-D solid modeling. Therefore, it was necessary to utilize beam-column strength of material formula to include the effects of the axial force and the bending moments that were induced by the eccentricity at each end of the diagonal member. This was accomplished using the aid of an Excel spread sheet to calculate the stresses and strains at the locations of the strain sensors.

The measured and the analytical strains in the bottom chord in the vicinity of splice joint 1 are shown in Fig. 12. These strains were measured in the continuous member of the truss bottom chord. The figure illustrates the good agreement between the analytical and the field strains. However, one may notice that the figure shows a sudden change in the analytical strains at the locations marked with solid squares. This could have resulted from the idealization used to transfer the truck load to the truss bottom chord. Factors that might have resulted in the differences between the measured and the analytical strains are summarized in the following

section. Additional comparison between measured and calculated strains in other members is summarized in [3]

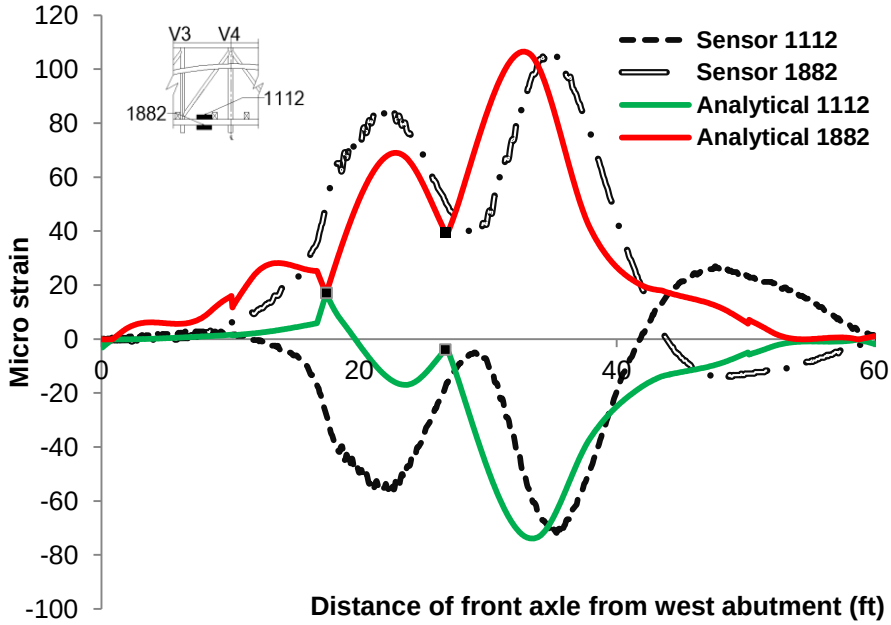

Fig. 12 Analytical and field strains in the vicinity of splice joint 1 of the north truss

5. Summary and Conclusions

This paper summarizes an investigation that was sponsored by the Federal Highway Administration and the USDA Forest Products Laboratory to develop a simple but accurate analytical model to analyze Burr Arch Truss bridges. A three dimensional model that included the splice joints that were used in the construction of the bridge was utilized in the analysis. The results of the analytical model were validated with the data obtained from the field testing of the same bridge structure.

The finite element results showed that idealizing the truss-arch structure excluding the eccentric in the connection between the vertical and diagonals, top chord and bottom chord members may yield a more stiff structure. In addition, the analytical model showed that the arch contributed to the load carrying capacity of the bridge.

The strains obtained using the analytical model yielded very reasonable strain results in the continuous bottom chord member in the vicinity of the splice joint. However, one must take into account the effect of the inherent eccentricity within the joints at both ends of members of the bridge structure and the actual structural properties of the splice joints. The later can be obtained from conducting laboratory and field tests on the different types of joints that are used in different types of historical timber bridges.

6. Acknowledgement

The study described in this manuscript was sponsored by the FHWA and the USDA Forest Products Laboratory (FPL) under the National Historic Covered Bridge Preservation Program.

The authors wish to thank Mike Ritter, Assistant Director, USDA FPL, for his cooperation and assistance during the course of the work. Special thanks to Allison Lunde (Machtemes) for her assistance in performing some of the finite element analysis presented in this paper and to Douglas Wood, ISU Structural Engineering Laboratory Manager, for his assistance with data interpretation and conduct of the testing.

7. Bibliography

[1] Bridge Diagnostics, Inc., BDI. 1989. Bridge Testing, Load Testing & Structural Monitoring Solutions, Boulder, CO

[2] Clark Dietz. 2009. Parke County Bridge No. 63 Special Feature Bridge Inspection. Indianapolis, IN: Clark Dietz, Inc. Print.

[3] Fanous, F., et. al., Improved Analytical Techniques for Historical Covered Bridges, Report submitted to Forest Product Laboratory, January 2013.

[4] Forest Products Laboratory.1990. Second Edition. Wood Engineering Handbook. Gen. Tech. Rep. Madison, WI: U. S. Department of Agriculture, Forest Service, Forest Products Laboratory. 4-13 p.

[5] "History of Covered Bridges." 2010. Welcome to the GDOT. Georgia Department of Transportation.<http://www.dot.state.ga.us/travelingingeorgia/bridges/coveredbridges/Pages/HistoryofCoveredBridges.aspx>.

[6] Hosteng, T., et. al., Covered Bridge Rating through Load Testing, Report submitted to Forest Product Laboratory, January 2013.

[7] Parke County, IN. Covered Bridges. 2001. Zacke Cox Covered Bridge. <http://www.coveredbridges.com/index.php/poi_detail?poiID=45>.

[8] STAAD Pro, 2011. Structural Analysis and Design, Revision 8.0: Bentley Systems, Exton, PA. USA.

[9] US Department of Transportation Federal Highway Administration. 2005. Covered Bridge Manual. Rep. no. FHWA-HRT-04-098. McLean, VA: Federal Highway Administration, Print.

2nd INTERNATIONAL CONFERENCE

TIMBERBRIDGES

LAS VEGAS 2013

September 30 – October 2, 2013 ● Las Vegas, Nevada

Edited by: James Wacker & Jaime Krohn

Copyright© 2013 WoodWorks – Wood Products Council, Washington DC

Electronic Proceedings Only

Sample Citation:

In: Wacker, J.; Krohn, J., eds. Proceedings, 2nd International Conference of Timber Bridges. Washington, DC: WoodWorks – Wood Products Council, 2013.