Proceedings of the SEM Annual Conference
June 7-10, 2010 Indianapolis, Indiana USA
©2010 Society for Experimental Mechanics Inc.

Measuring the Elastic Modulus of Soft Thin Films on Substrates

M.J. Wald[1*], J.M. Considine[2], K.T. Turner[3]

[1]Dept. of Engineering Physics, University of Wisconsin, Madison, WI

[2]US Forest Service, Forest Products Laboratory, Madison, WI

[3]Dept. of Mechanical Engineering, University of Wisconsin, Madison, WI

*1513 University Avenue, Madison, WI 53706; wald@wisc.edu

Abstract

The use of instrumented indentation to measure the mechanical properties of thin films supported on substrates where the Young's modulus of the film (E_1) is substantially less than that of the Young's modulus of the substrate (E_2) with modulus ratios from E_1/E_2 = 0.0001 to 1 is important for investigating materials such as soft polymers, cellulosic sheets, and biological materials. Most existing models for determining the elastic properties of films or sheets on substrates from indentation measurements were developed for the analysis of metal and dielectric films on semiconductor substrates and thus have been used in cases where E_1/E_2 is ~0.01 to ~10. In the present work, flat punch indentation of systems with E_1/E_2 = 0.0001 to 1 is investigated via finite element (FE) modeling and experiments. A FE parametric study in which E_1/E_2 was varied from 0.0001 to 1 was performed to quantify the effect of substrate stiffness on the measurement of the elastic film properties. A semi-analytical model that treats the thin film and substrate as two springs in series was fit to the FE results to allow for use of the results presented. Preliminary experiments, in which a series of film/substrate systems with various modulus mismatch (E_1/E_2 from ~0.0005 to ~1) were characterized using instrumented indentation, were performed to evaluate the effectiveness of the model for extracting films properties from indentation measurements. The results of the parametric FE study show that for very stiff substrates, the measured stiffness becomes insensitive to changes in substrate modulus. The analytical model and FE model agree to within 7% for E_1/E_2 values between 0.0001 to 1 and a/t ratios from 1 to 100. Comparison of the preliminary experimental results and FE model show reasonable agreement, but further investigation is required to obtain better correlation.

Introduction

Instrumented indentation is a common method for characterizing the mechanical properties of a thin film on a substrate. A widely accepted method for determining the modulus of an elastic halfspace from indentation was presented by Oliver and Pharr [1]. For films on substrates, the Oliver-Pharr method has been shown to produce reliable measurements of film properties for indentation depths up to approximately ten percent of the film thickness for certain indenter geometries [2]. This limit on indentation depth is an approximation as the size of the contact area and thickness of the film both influence the role that the substrate will have on stiffness measurements. Regardless, when indenting films on substrates, even to shallow depths, the measurement and standard data analysis often yields an effective modulus that depends on the elastic properties of both the film and substrate. Numerous mechanics models [3-7] have been developed to determine the Young's modulus of the film from the effective modulus measurements obtained using the standard Oliver-Pharr approach. Most of these models, however, have only been rigorously tested and shown to be effective for film modulus to substrate modulus ratios of 0.1 – 10, which are typical of systems that involve combinations of metals, ceramics, and semiconductors. It is unclear if these models can be applied to cases where the indenter has a large contact area and the film/substrate system has a high elastic mismatch, such as a polymer film or biological material supported on much stiffer substrate like metal or glass.

In the present work, cylindrical flat punch indentation of an elastic thin film on an elastic substrate is investigated for cases in which E_1/E_2 varies from 0.0001 to 1. Cylindrical flat punch indentation is investigated here because many soft materials of interest have complex and porous structures and larger contact areas are required to

suitably sample the average elastic properties. Specifically, we investigate flat punch indentation cases where the contact radius, a, to film thickness, t, ratio, a/t, varies from 1.0 to 100. Indentation over this range of E_1/E_2 and a/t ratios was investigated using a 2-D axisymmetric finite element model. A simple analytical model based on treating the film-substrate system as two springs in series is presented to capture the response predicted by the FE model. Finally, instrumented indentation experiments were used to examine the properties of a thin low density polyethylene (LDPE) film on several substrates with different elastic moduli in order to examine the effectiveness of the model. We note that LDPE is not a particularly soft material (E~100 MPa) compared to gels and biological materials, however LDPE allows specimens with a large range of moduli mismatch (E_1/E_2 from ~0.0005 to ~1) to be easily prepared and tested and thus was chosen for this initial work.

Background

Analysis of Flat Punch Indentation

Results from instrumented indentation tests are typically analyzed assuming the specimen is a homogeneous isotropic elastic halfspace. From the load-displacement history recorded in a test, a stiffness k is measured. For an axisymmetric indenter, the effective modulus is related to the measured stiffness via

$$E_{eff} = \frac{\sqrt{\pi}}{2}\frac{1}{\sqrt{A}}k\,, \tag{1}$$

where A is the area function of the indenter and, in general, is a function of indentation depth [1]. For flat punch indentation, the indenter area is constant with depth and $A=\pi a^2$. Thus, Equation (1) reduces to

$$E_{eff} = \frac{k}{2a}\,. \tag{2}$$

The effective modulus is defined as

$$\frac{1}{E_{eff}} = \frac{1}{E_s^*} + \frac{1}{E_i^*}\,, \tag{3}$$

where $E_s^* = E_s/(1-\nu_s^2)$ and $E_i^* = E_i/(1-\nu_i^2)$ are the reduced moduli of the specimen and the indenter respectively. The above equations are valid for cases in which the substrate is an elastic halfspace or in cases in which a film is sufficiently thick such that the substrate does not affect the stress distribution in the film. However, for most practical applications of cylindrical flat punch indentation in which the properties of a thin film on a substrate (Figure 1) are measured, the specimen cannot be treated as a halfspace and k, and subsequently E_{eff}, depend on the elastic properties of the film and substrate, film thickness, and indenter geometry.

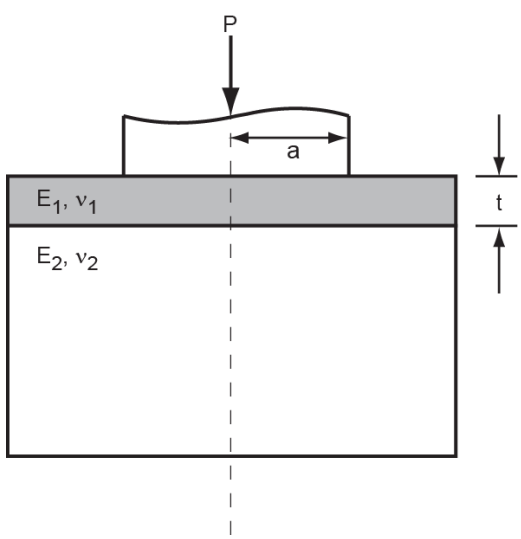

Figure 1 - Schematic of indentation problem considered. The system consists of an elastic thin film on a thick elastic substrate being indented by a rigid cylindrical flat punch

Previous Analyses of Indentation of Films on Substrates

Several models have been proposed to describe the relationship between the film and substrate elastic properties, indenter geometry, and film thickness in order to extract the elastic modulus of a thin film on a substrate from instrumented indentation measurements. A complete review of all the models is not possible here, thus the more commonly cited models are briefly summarized. Gao, *et. al* [3], King [7], and Sakai [6] have all presented analytical models for the indentation of a film supported on a halfspace. Gao *et. al* employed weight functions with no undetermined constants to determine the elastic properties of films from measured effective moduli. This method is only applicable for cases where the E_1/E_2 ratio is between 0.5 and 2. An analysis from Rar *et al.* [4] extended Gao's model apply to cases with a modulus mismatch from 0.1 to 10 and a/t between 0.1 and

10. King's model describes the relationship between film and substrate modulus using exponential functions and an undetermined constant and has been used to determine the modulus of an aluminum film on silicon substrate [8]. Sakai used Boussinesq's Green function to determine film modulus from E_{eff} and presented results for E_1/E_2 from 0.2 to 10 and a/t from 0.01 to 10.

In the present work, we use an analytical model similar to that presented by Bec *et. al* [5] in which the film and substrate are treated as two springs in series. The stiffness of one spring is determined by considering the stiffness of the film deformed by a uniform displacement by a rigid cylindrical flat punch. The stiffness of the second spring is the stiffness of an elastic halfspace under a uniform displacement with the substrate's elastic properties. Combining these springs in series gives

$$\frac{1}{k} = \frac{t}{f\left(\frac{a}{t}\right)\pi a^2 E_1^*} + \frac{1}{f\left(\frac{a}{t}\right)2aE_2^*}, \tag{4}$$

where k is the measured stiffness, t is the film thickness, a is the indenter radius, and E_1^* and E_2^* are the reduced moduli of the film and substrate, respectively. Bec *et. al* [5] used $f\left(\frac{a}{t}\right) = 1 + \frac{2t}{\pi a}$. Cases where E_1/E_2 varied from 0.1 to 10 and a/t varied from 0 to 3 were examined in [5].

Methods

Finite Element Modeling

A finite element (FE) model was developed to systematically investigate the effect of indenter contact radius, film thickness, film modulus, and substrate modulus on the effective modulus measured via indentation. The basic model geometry consists of a thin elastic layer on a thick elastic substrate indented by a cylindrical flat punch as shown in Figure 1. The model was axisymmetric and the film and substrate were meshed with eight-node elements. The indenter was modeled as a rigid body and displaced into the surface. The indenter-film surface interaction was modeled using contact elements. The model was developed and solved using the commercial package ABAQUS [9]. Two studies were performed using the model. In the first, the modulus ratio, contact radius to film thickness ratio, and film thickness were parametrically varied across the range shown in Table 1. In all of these cases, the Poisson's ratio for the film and substrate was fixed at 0.3. In the second study, the sensitivity of the measured stiffness to changes in film modulus was evaluated by investigating the percent change in the effective stiffness when the film modulus is changed from E_1 = 100 MPa to E_1 = 110 MPa on substrates with moduli ranging from 100 MPa to 1 TPa (corresponding to E_1/E_2 from ~1 to ~0.0001). Again, Poisson's ratio for the film and substrate was fixed at 0.3.

Instrumented Indentation Experiments

Indentation tests were conducted on a TA Q800 DMA in controlled force mode using a 900 μm diameter steel cylindrical flat punch. The specimens were loaded at a rate of 10 mN/s up to maximum load of 1 N. The maximum load was held for 1 minute. Following the hold period, the specimens were unloaded at a rate of 10 mN/s. The stiffness, k, is determined from the slope of the unloading curve. Machine compliance was measured through indentation tests on a fused silica sample, yielding a machine compliance of 0.668 +/- 0.091 μm/N. The stiffnesses measured from the unloading curves were corrected using this machine compliance.

Table 1 - Parameters for FE simulations

Fixed Parameters	Parameters Varied
t = 80 μm E_1 = 100 MPa $\nu_1 = \nu_2$ = 0.3	E_1/E_2 = 0.0001 - 1 a/t = 1 - 100
t = 100 μm E_1 = 100 MPa $\nu_1 = \nu_2$ = 0.3	E_1/E_2 = 0.0001 - 1 a/t = 1 - 100

Table 2 - Summary of film and substrate properties used in experiments

	Young's Modulus	Ref.
Film		
LDPE	55.1 - 172 MPa	[10]
Substrate		
LDPE	55.1-172 MPa	[10]
PMMA	3.3 GPa	[10]
Aluminum	70 GPa	[11]
Steel	204 GPa	[11]

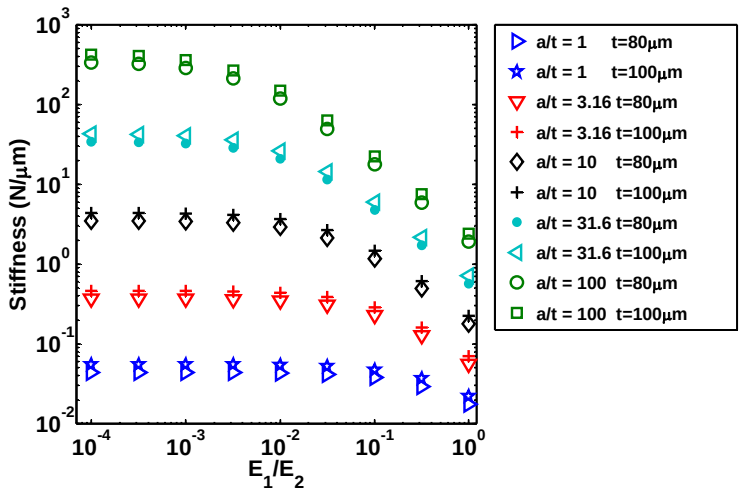

Figure 2 - Effective stiffness of a film on a substrate for various E_1/E_2 and a/t ratios calculated via FE modeling. For all cases, E_1 = 100 MPa and ν = 0.3

The stiffness of a LDPE film (t = 100 μm) on several different substrates with various elastic moduli were measured. The elastic properties of the film and the substrate are summarized in Table 2. All values shown in Table 2 are nominal values taken from the references listed. Tensile tests to verify the properties of actual materials used are currently being performed.

Finite Element Results and Analytical Model

FE Results

Results from FE simulations over the range of parameters in Table 1 are summarized in Figure 2, which shows the indentation stiffness as a function of modulus and a/t ratio. For a fixed film modulus, the stiffness of the system increases as the contact radius increases and as the substrate modulus increases. At low values of E_1/E_2 (i.e. substrate modulus >> film modulus), the stiffness is relatively insensitive to substrate modulus.

A study to assess the sensitivity of film-substrate systems to changes in film modulus was also performed. The percent change in stiffness that occurs due to changing the film modulus from 100 MPa to 110 MPa is shown in Figure 3 as a function of a/t and substrate modulus. The sensitivity to changes in the film modulus increases as the substrate modulus increases, approaching a 9% change when E_1/E_2 ~ 0.0001 for the cases shown. However, as the a/t ratio increases, the change in measured stiffness decreases. This is especially apparent when comparing the a/t = 1 case and the a/t = 100 case at E_2 = 100 MPa where there is a 4.3% change in stiffness for the a/t = 1 case, but 0.1% change when a/t = 100.

Analytical Model

The indenter substrate system shown in Figure 1, in which a/t > 1, lends itself to the development of a simple analytical model. The measured stiffness of the system depends on the modulus and Poisson's ratio of each layer, indenter contact radius, and film thickness. A simple analytical model can be developed by considering each layer as a spring and then combining the springs in series to determine the stiffness for the system, similar to the approach used by Bec et al. [5].

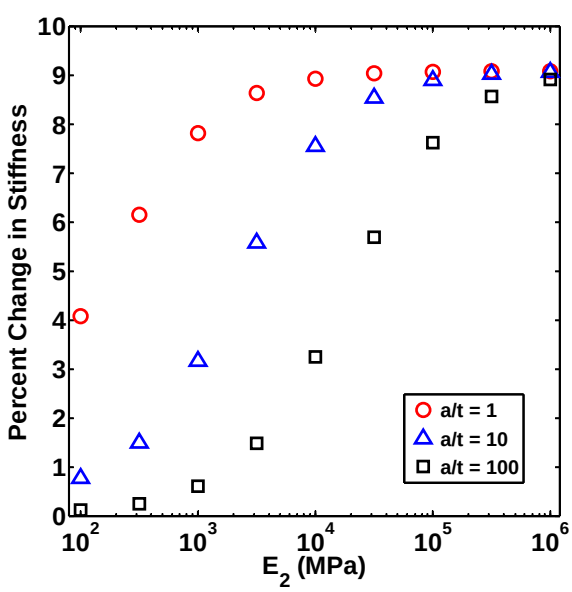

Figure 3 - Percent change in effective stiffness between two films (E_1=100 MPa and E_1=110 MPa) on substrates of varying modulus (E_2)

The stiffness of the spring representing the film is estimated as the stiffness of an elastic cylinder of radius a under uniform axial displacement. As the layer is thin relative to the cylinder radius, the in-plane strain is constrained and the uniaxial-strain modulus is used in place of Young's modulus. The degree of constraint will be a function of a and t and thus a constant, C_1, that is assumed to be a function of a and t is introduced. With these assumptions, the stiffness of the film is given as:

$$k_1 = \frac{C_1 \pi a^2 E_1'}{t}, \qquad (5)$$

where $E_1' = \dfrac{(1-\nu)E_1}{(1+\nu)(1-2\nu)}$.

The stiffness of the spring representing the substrate is determined by calculating the stiffness of an elastic halfspace loaded by a constant pressure over a circular area of radius a [12]. A constant pressure distribution assumes the thin film evenly distributes the pressure from the indenter onto the substrate. The radius of the area over which the pressure is distributed will be slightly larger than the contact radius and will depend on a/t, thus a constant C_2, that is a function of a/t is introduced in the stiffness equation yielding

$$k_2 = \frac{C_2 \pi a E_2^*}{2}, \tag{6}$$

where $E_2^* = E_2 / (1-\nu^2)$. The overall stiffness of the system was found by combining Equations 5 and 6 assuming the springs are connected in series:

$$k = \frac{k_1 k_2}{k_1 + k_2} = \frac{C_1 C_2 \pi a^2 E_2^* \xi}{(2C_1 a \xi + C_2 t)}, \tag{7}$$

where $\xi = \frac{E_1'}{E_2^*}$.

As noted earlier, constants C_1 and C_2 are unknown, but are assumed to be a function of a and t. The values of C_1 and C_2 are determined through fits to the FE simulations in the present work. During fitting, the following dimensionless stiffness is used:

$$\frac{k}{E_2^* \sqrt{A}} = \frac{C_1 C_2 \sqrt{\pi}\, \xi}{2C_1 \xi + C_2 \cdot \left(\frac{t}{a}\right)}. \tag{8}$$

Calibration of Analytical Model using FE Results

Values of C_1 and C_2 were determined by fitting the model given by Equation (8) to the FE results shown in Figure 2. A comparison between the analytical model fit and the FE data is shown in Figure 4a. The error between the FE model and the analytical model is shown in Figure 4b. There is good agreement between the FE results and

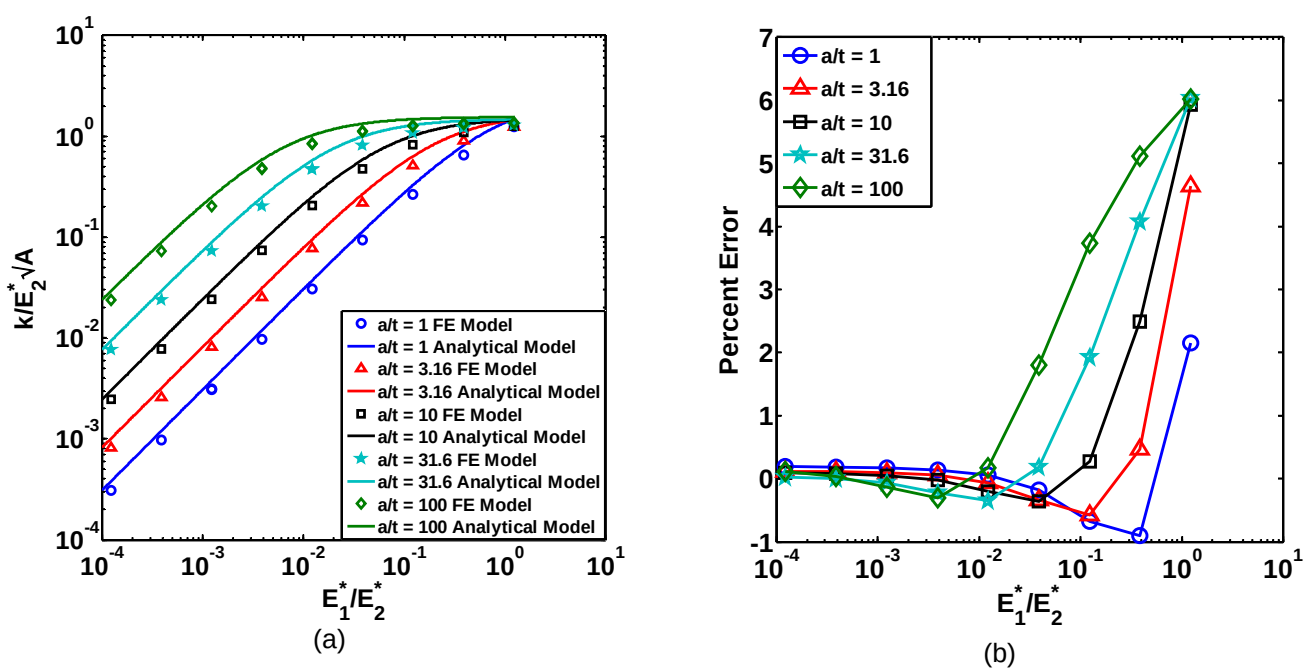

(a) (b)

Figure 4 - (a) Results of the FE simulations and the analytical model fit to the FE results. Nondimensional stiffness as a function of modulus ratio is shown. (b) The error between the analytical model fit and the FE results. As the substrate modulus increases, the error between the models decreases.

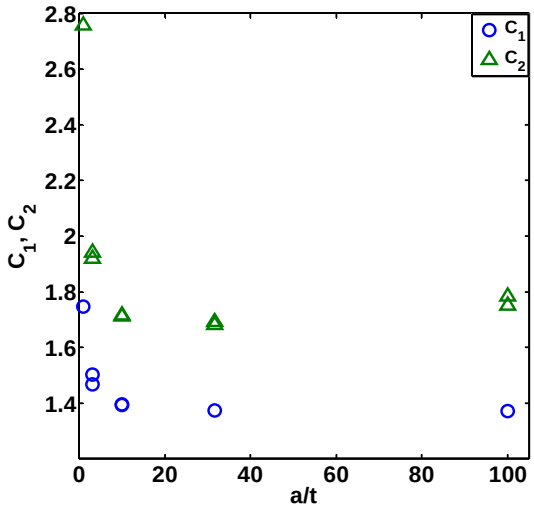

Figure 5 - Values of C_1 and C_2 parameters in the analytical model as a function of a/t determined through fitting to FE results.

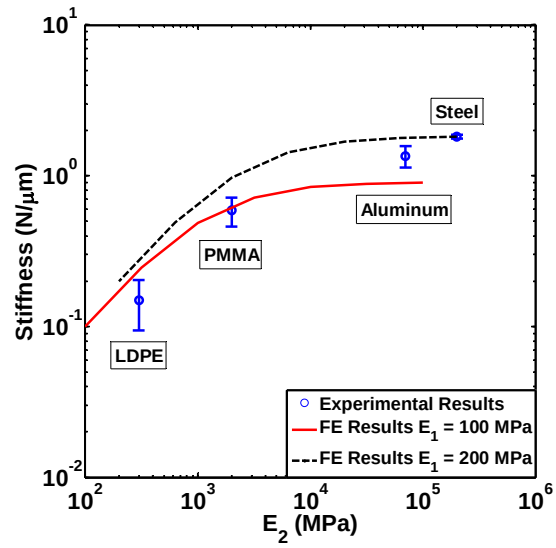

Figure 6 - Measured stiffness of an LDPE film on LDPE, PMMA, aluminum, and steel substrates. For each substrate, 5 measurements were performed at 5 locations. The mean values are plotted and the error bars correspond to +/- one standard deviation. The solid lines show the FE calculated stiffness for a film with E_1 = 100 MPa and E_2 = 200 MPa.

the fit, with errors of less than 7% over the range examined. The agreement is best in cases where the substrate is much stiffer than the film. When the substrate modulus is at least 100 times larger than the film modulus, the difference between the FE and fit is less than 1%. The C_1 and C_2 values calculated during the fitting procedure vary as a function of a/t and are shown in Figure 5. For both parameters, much of the variation occurs for low a/t ratios (a/t < 20). The analytical model differs from the model presented by Bec *et al.* [5] in two ways: (1) Bec *et al.* assumed the substrate was subjected to a uniform displacement rather than a uniform pressure, (2) Bec *et al.* derived analytical expressions for the constants as functions of a/t.

Preliminary Experimental Results

The effective stiffnesses of the LDPE film on several substrates are shown in Figure 6 as a function of the modulus ratio. As expected, the measured stiffness of the system increases as the substrate modulus increases.

Figure 6 also shows finite element results for cases where the film modulus is 100 MPa and 200 MPa. For both cases, the maximum load was 1 N and Poisson's ratio was assumed to be 0.3. While the modulus of the LDPE film is not known precisely, the finite element simulations provide boundaries that suggest that the modulus of the film is between 100 and 200 MPa, which is consistent with the nominal values given in Table 2. Although most of the experimental data lies within the boundaries of the 100 MPa and 200 MPa cases, the trend shown by the data does not follow either set of FE results as function of substrate modulus.

There are several potential causes for the discrepancy between the experimental data and FE simulations. First, the elastic properties of the materials in the experiments are not precisely known and literature values were used. Second, for the FE simulations it was assumed that Poisson's ratio was 0.3 for all cases, whereas the materials tested do not all have a Poisson's ratio of 0.3. Finally, the compliance of steel indenter may need to be considered, particularly in the cases where E_2 is high, as the model currently assumes a rigid indenter. Additional FE simulations and experiments are underway to establish better correlation between the model and experimental results.

Conclusion

Finite element studies were conducted to determine the effect that the a/t ratio, the E_1/E_2 ratio and the film thickness have on the measured stiffness of a thin film on a substrate indented using a cylindrical flat punch. For substrates that are very stiff relative to the film, the measured stiffness is insensitive to changes in the substrate modulus. When a/t =1, this occurred for $E_1/E_2 < 0.1$.

To better understand the relationship between the film and substrate properties and to facilitate the use of the results from the FE model, an analytical model of the film-substrate system was developed. The system was modeled as two springs connected in series. The FE results were used to determine the values of two unknown constants in the analytical model. With the values of these constants that were determined through fitting, the analytical and FE model agree to within 7% over E_1/E_2 values from 0.0001 to 1 and a/t ratios from 1 to 100.

The stiffness of an LDPE film resting on LDPE, PMMA, aluminum, and steel substrates was experimentally characterized using instrumented indentation and compared to model results. Preliminary experimental results show reasonable agreement with the model, but clear discrepancies exist and further investigation is required.

Acknowledgments

We acknowledge financial support from the United States Postal Service and the US Forest Service, Forest Products Laboratory.

References

[1] Oliver, W. C., and Pharr, G. M., 1992, "An Improved Technique For Determining Hardness And Elastic-Modulus Using Load And Displacement Sensing Indentation Experiments," Journal of Materials Research, 7(6), pp. 1564-1583.
[2] Pharr, G. M., and Oliver, W. C., 1992, "Measurement Of Thin-Film Mechanical-Properties Using Nanoindentation," Mrs Bulletin, 17(7), pp. 28-33.
[3] Gao, H. J., Chiu, C. H., and Lee, J., 1992, "Elastic Contact Versus Indentation Modeling Of Multilayered Materials," International Journal of Solids and Structures, 29(20), pp. 2471-2492.
[4] Rar, A., Song, H., and Pharr, G., 2002, "Assessment of New Relation for the Elastic Compliance of a Film-Substrate System," *Materials Research Society Symposium Proceedings*, pp. 431-436.
[5] Bec, S., Tonck, A., Georges, J. M., Georges, E., and Loubet, J. L., 1996, "Improvements in the indentation method with a surface force apparatus," Philosophical Magazine a-Physics of Condensed Matter Structure Defects and Mechanical Properties, 74(5), pp. 1061-1072.
[6] Sakai, M., 2006, "Elastic and viscoelastic contact mechanics of coating/substrate composites in axisymmetric indentation," Philosophical Magazine, 86(33-35), pp. 5607-5624.
[7] King, R. B., 1987, "Elastic Analysis Of Some Punch Problems For a Layered Medium," International Journal of Solids and Structures, 23(12), pp. 1657-1664.
[8] Bec, S., Tonck, A., and Loubet, J. L., 2006, "A simple guide to determine elastic properties of films on substrate from nanoindentation experiments," Philosophical Magazine, 86(33-35), pp. 5347-5358.
[9] 2010, "ABAQUS," Version 6.7, SIMULIA.
[10] Brandrup, J., Immergut, E. H., Grulke, E. A., Abe, A., and Bloch, D. R., 2005, Polymer Handbook, John Wiley & Sons.
[11] Cook, R. D., and Young, W. C., 1999, Advanced Mechanics of Materials, Prentice Hall, Upper Saddle River, NJ.
[12] Johnson, K. L., 2003, Contact Mechanics, Cambridge, New York.

Wald, M.J.; Considine, J.M.; Turner, K.T. 2010. Measuring the elastic modulus of soft thin films on substrates. In: Proceedings of SEM annual conference and exposition on experimental and applied mechanics. 2010 June 7-10. Indianapolis, IN. Bethel, CT: Society for Experimental Mechanics, Inc. Paper #329; CD; ISBN: 978-1-935116-05-9.