 © 2008 ASCE

Feasibility of rehabilitating timber bridges using mechanically fastened FRP strips

Authors:

Alyssa E. Schorer, Dept of Civil and Environmental Engineering, University of Wisconsin, Madison, WI 53706
Lawrence C. Bank, Dept of Civil and Environmental Engineering, University of Wisconsin, Madison, WI 53706
Michael G. Oliva, Dept of Civil and Environmental Engineering, University of Wisconsin, Madison, WI 53706
James P. Wacker, USDA Forest Products Laboratory, One Gifford Pinchot Drive, Madison, WI 53726
Douglas R. Rammer, USDA Forest Products Laboratory, One Gifford Pinchot Drive, Madison, WI 53726

ABSTRACT

Many timber trestle railroad bridges in Wisconsin have experienced deterioration and are in need of rehabilitation. In addition, the railroad industry is increasing the weights of cars. The combined effect of heavier loads and deterioration threatens to cut short the service life of timber bridges. One of the most critical problems that has been identified was the overloading of timber piles in bridges, which can be remedied by creating a stiffer pile cap. The goal of this investigation was to show that fiber reinforced polymer (FRP) strips fastened to timber with screws can be used to create composite action between two beams in flexure or truss action between two deep beams. Ultimately this may help redistribute the loads to piles when FRP strips are used as struts on cap beams over short spans. Several test series were conducted with beams in flexure, deep beams over short spans, and full scale specimens to determine the manner in which FRP strips improved the members' performance. Mechanically fastened FRP strips were effective in developing composite action in slender beams in flexure and truss action in short deep beams.

INTRODUCTION

Mechanically fastened fiber reinforced polymer (MF-FRP) strips have been successfully used to stiffen concrete beams. "Mechanically fastened" refers to strips that are connected to another material with dowel type fasteners (screws, nails, etc) penetrating through the strip and anchored into the main member. The MF-FRP method is preferred to using adhesives because there is minimal surface preparation and can be done quickly and with unskilled labor [Lamanna et al, 2001; Bank and Arora, 2007]. In addition, the MF-FRP technique has been used for shear strengthening of stringers [Akbiyik et al, 2007] and flexural strengthening of timber beams [Dempsey and Scott, 2006]. In a recent study of timber trestle railroad bridges it was found that the main source of concern was deteriorating stringers and overloading of piles [Westbrook, 2006]. Figure 1 shows a typical cross section for a 5 pile bent. Non ideal pile spacing in the field

was noted, especially in the case of two intermediate piles having been driven closer to the outer piles, leaving a large percentage of the load to be carried by the center pile. Pile settlement occurs as a result of over loading which in turn causes the pile cap to deflect more than allowed and deteriorate under dynamic loads. A commonly used retrofit technique in this case is to "double cap" the pile cap by adding an additional cap beam to create a double depth cap beam with greater stiffness [Radford et al, 2002]. The objective of this study was to determine if rehabilitation of timber bridges through the use of MF-FRP methods is a feasible way to extend the service life of the railroad bridges. This study focused on two concepts: first on the stiffening of beams by creating composite action through MF-FRP strips with lag screws, and secondly using MF-FRP strips to create "truss-action" in deep beams with short spans.

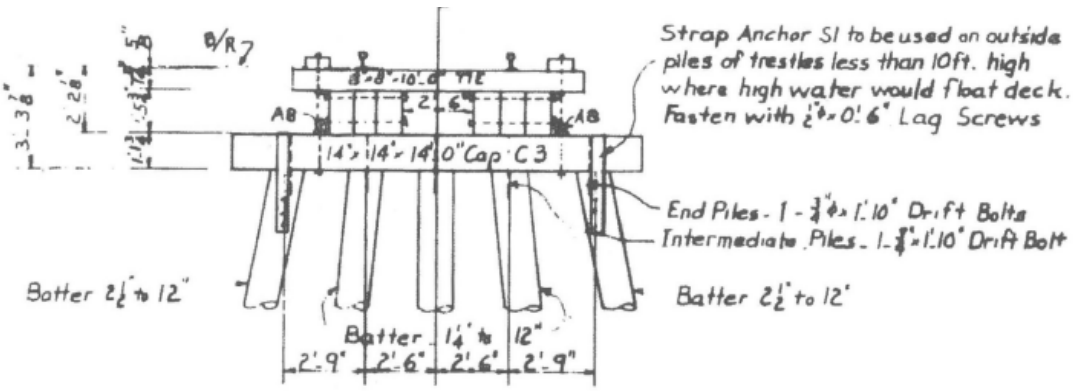

FIGURE 1. TYPICAL 5 PILE BENT FOR A TIMBER TRESTLE RAILROAD BRIDGE

The testing was done in different series in order to focus on the different ways in which FRP may benefit the structure. Series 1 - Width Series: Tests were conducted to determine how varying widths of timber beams affected how efficiently MF-FRP strips could attain composite action when used to fasten two stacked beams. Series 2 - Depth Series: Tests on deep beams were conducted to determine whether FRP strips were effective over short, deep spans and if composite action was the issue in this case. Series 3 – Full-scale Series: The third category of tests was full scale specimens, in order to replicate the in situ system of having multiple short span supports, and to observe the behavior of the pile caps as the pile spacing changes. Though the standard design prescribes a specific pile spacing, very few of the bridges have maintained accurate spacing; therefore this test series will determine the effect of the spacing on the load carrying capacity of the bent. In addition, with the shorter spans, it was anticipated that there would be a relatively large amount of transverse compression in the wood and this test was constructed to give an indication of whether or not FRP strips could assist in carrying compression loads as well.

FRP MATERIAL PROPERTIES

Coupon tests were conducted on the FRP strips manufactured by Strongwell (SafStrip™) which were used in this project. Strips were 1" wide, 14" long, and 1/8" thick and were loaded in tension until rupture. Stress strain curves for 10 specimens yielded an average modulus of elasticity of 9.4×10^6 psi and an average tensile strength of 152 ksi.

TESTING – SERIES 1: WIDTH SERIES

All tests were conducted at the Forest Products Laboratory in Madison, Wisconsin. For the "width series" testing, Douglas Fir beams of 4" height and varying widths were tested. The combinations were as described in Table 1. Specimens were rough sawn Douglas Fir timber beams that were surplus from a testing project at the Forest Products Laboratory. They were stored inside and had moisture contents ranging from approximately 9% to 13%. All dimensions given are nominal. The stacked specimens were meant to represent the double pile caps of a timber bridge which were not mechanically or adhesively connected to each other. Epoxied specimens were meant to simulate fully composite behavior between two beams. Lastly, the FRP X-braced specimens were tested in order to examine the feasibility of using FRP as a method of obtaining full or partial composite action by comparing it to the stacked and epoxied specimens. The epoxied specimens were fabricated by mixing a 2 part epoxy and applying it to the surfaces to be bonded. The epoxied surfaces were placed against each other and then squeezed in a press with a minimum of 100 psf pressure. The FRP X-braced specimens were laid out and clamped together, eliminating any gaps between the two beams. FRP strips were pre-drilled with the desired fastener patterns. The centerline of the beams was located and marked and 1.75 in wide strips were attached with Spax® self tapping 1/4" x 2" lag screws, beginning at the centerline and working outwards. A washer was placed under the head of each screw to distribute the stress and prevent the screw head from biting into the FRP. The overhanging edges were sawn to be flush with the timber. The X pattern was created with each strip lying at a 45 degree angle to the edge of the beam. Figure 2 shows a close up of the FRP X-braced specimen of two 4" deep beams.

FIGURE 2. TWO MEMBERS STACKED AND FASTENED WITH FRP STRIPS AND SCREWS.

Beam Width	Configuration	Description	Purpose
4" 8" and 12"	Single Beam	A single member	Control
4" 8" and 12"	Stacked Beams	One beam on top of the other	No composite action
4" 8" and 12"	Epoxied Beams	One beam on top of the other – epoxied	Full Composite Action
4" 8" and 12"	FRP X-Braced Beams	FRP fastened to outer surface on either side	To determine % composite action achieved by MF-FRP strips

TABLE 1. TEST SPECIMEN CONFIGURATIONS

Beams were tested in two spans: a long span (10.5 ft or 126 in) and a short span (5 ft or 60 in). These lengths were chosen because 5 ft is roughly the distance between the two intermediate

piles of a bent (the span of the pile cap should the center pile settle) and 10.5 ft is the distance between the two outermost piles (the span of the cap should all three center piles settle). The tests were conducted on a test frame with an MTS servo controlled actuator with a 10,000 lb load cell; data acquisition was through an MTS controller and PC with a custom program in LabView. Each long span beam tested had 5 LVDTs attached to measure mid and quarter span deflections, and slip (i.e., relative longitudinal displacement between the beams at their interface) between the two stacked beams over the supports, when applicable. The shorter spans had LVDTs measuring mid span deflections and slip. An overall picture of the testing setup for the long beam span is shown in Figure 3.

FIGURE 3. TEST SETUP FOR THE LONG (10'- 6") 12 INCH WIDE X-BRACED BEAM.

Test Procedure

For each test, the theoretical maximum allowable midspan concentrated load based on the allowable flexural (bending) stress (F_b =1,600 psi) was calculated using the nominal dimensions of the beam and beam theory.

	10.5 ft span			5 ft span		
Beam Width	**Stacked**	**Epoxied**	**X-Braced**	**Stacked**	**Epoxied**	**X-Braced**
4" Wide	1081	2178	2178	2270	4574	4574
8" Wide	2162	4356	4356	4540	9148	9148
12" Wide	3243	6534	6534	6810	13722	13722

TABLE 2. ALLOWABLE LOADS FOR EACH SPECIMEN, IN LBS

It was found that the flexural strength controlled the maximum allowable load as opposed to the shear strength for both spans. Specimens were placed onto the testing apparatus and centered on each support. A small preload was applied, around 20 lbs, in order to ensure that the beam was not being loaded eccentrically when testing commenced. Specimens were loaded in deflection control at a rate of 0.23 in/min until the maximum allowable load was reached or the LVDTs full capacity was met, whichever occurred first. In most cases, the maximum allowable load was reached first. Each specimen was loaded and data collected three separate times.

RESULTS – SERIES 1 - WIDTH SERIES

The flexural stiffness, EI, of the beams was obtained from the load deflection curves for each specimen for both the long span and the short span. Figure 4 shows the plots for the 4, 8 and 12 inch wide beams.

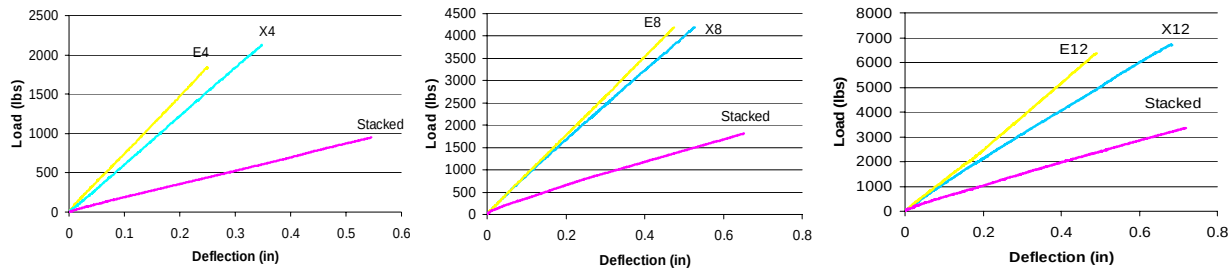

FIGURE 4. NORMALIZED LOAD VS. DEFLECTION CURVES FOR 10.5' SPAN FOR 4, 8 AND 12" BEAMS

The epoxied specimen, E4, that simulates a fully composite section, has the greatest slope and hence the highest stiffness. The stacked line represents two stacked timbers and its slope is the smallest. The FRP X braced specimen, X4, lies between the stacked and epoxied, indicating that they do achieve more composite action than the stacked beams but not quite the fully composite action of the epoxied timbers. Apparent EI values (denoted E_aI) were obtained from the slopes in Figure 4 and compared to the fully composite (epoxied) stiffness as shown in Table 3.

Span	E_aI Epoxied Beam	E_aI - FRP X-Braced	FRP X-Braced Stiffness as % of Epoxied Stiffness
4" Width Series			
10.5' Span	3.04E+08	2.56E+08	84%
5' Span	1.96E+08	1.20E+08	61%
8" Width Series			
10.5' Span	4.99E+08	4.18E+08	83%
5' Span	3.52E+08	2.58E+08	73%
12" Width Series			
10.5' Span	8.17E+08	5.27E+08	64%
5' Span	5.71E+08	3.42E+08	59%

TABLE 3. FRP X-BRACED E_AI VALUES SHOWN AS A PERCENTAGE OF E_AI FROM SAME SIZED EPOXIED BEAMS

It can be seen from Table 3 that, (1) for all beams shear deformation effects significantly influence the short 5 ft span and that the apparent stiffness for these spans is much less than for the 10.5 span, (2) the composite "efficiency" of the X-braced beams decreases with the beam width indicating that the effectiveness of the strips attached to the outer faces decreases as the beam width increases, and (3) the effectiveness of the X-braced beams is less for the shorter span indicating that the X-braced strips have less effect when shear deformation effects are larger. Having data from two different spans allows us to calculate the "true" E_bI value using shear deformation beam theory. The line connecting two data points of load and deflection at each span can be plotted using:

$$\Delta = \frac{PL^3}{48E_bI} + \frac{PL}{4kAG} \tag{1}$$

$$\frac{\Delta}{PL} = \frac{1}{E_b I}\left(\frac{L^2}{48}\right) + \frac{1}{4kAG} \tag{2}$$

Where E_b is the flexural modulus, G is the shear modulus, Δ is the maximum deflection at midspan, P is the load applied to center of specimen, L is the span, A is the cross sectional area of specimen, I is the second moment of inertia, and k is the shear coefficient. In (1) the first term is the deflection due to bending, and the second is the deflection due to shear. Re-arranging (1) yields (2) in which E_bI is obtained from the inverse of the slope and 4kAG from the intercept. For each specimen, the load and deflection from the 5ft span and the 10.5ft span was used to create a pair of (x, y) coordinates so that the E_bI and kAG could be calculated. The true EI value obtained was designated E_bI to differentiate it from the apparent EI, or E_aI. E_bI values are compared to the E_aI values in Table 4.

Beam	Y_1	Y_2	X_1	X_2	$(Y_2-Y_1)/(X_2-X_1)$	E_bI	$E_bI_{xbrace}/E_bI_{epoxy}$	$E_aI_{10.5' span}$	E_aI/E_bI
E4	3.62E-07	1.05E-06	75	330.75	2.71E-09	3.69E+08		3.04E+08	0.82
X4	7.64E-07	1.67E-06	75	330.75	3.56E-09	2.81E+08	0.76	2.56E+08	0.91
E8	3.75E-07	8.97E-07	75	330.75	2.04E-09	4.90E+08		5.00E+08	1.02
X8	3.54E-07	9.96E-07	75	330.75	2.51E-09	3.98E+08	0.81	4.18E+08	1.05
E12	2.93E-07	6.10E-07	75	330.75	1.24E-09	8.08E+08		8.17E+08	1.01
X12	3.79E-07	8.07E-07	75	330.75	1.68E-09	6.60E+08	0.74	5.27E+08	0.88

TABLE 4. E_AI AND E_BI VALUE COMPARISON (EI UNITS IN LB-IN^2)

It is normally expected that the true value, E_bI would be larger than the apparent value, which is generally the case in the last column of Table 4. In addition the comparison between the true E_bI value of the X-braced specimen and the epoxied specimen shows the stiffening effects of the FRP strips as a percentage of stiffness of the bonded members. It is an accepted fact that working with wood products, as opposed to manufactured materials such as steel and concrete, presents challenges due to the well-known variability in the properties of wood members. Even for solid timber beams flexural modulus values have a scatter. Due to this fact, it is not possible to obtain a definitive value for the EI of a FRP braced beam in terms of an epoxied beam from only one specimen of each type. However, the data in Table 4 offers sufficient evidence that an FRP braced beam can achieve a consistent amount of partial composite action that does not appear to depend on the beam width for the widths considered.

TESTING – SERIES 2 - DEPTH SERIES

The specimens for the depth series came from the same group of timbers as the width series. The specimen combinations consisted of 4” wide by 14” deep beams stacked over one another. As above, stacked, epoxied, and FRP-X braced combinations were used, and were fabricated via the same process. The only difference in fabrication was the application of strain gauges to the FRP strips. The strip that lay closest to the timber had a strain gauge affixed only to its top surface, while the strip that lay on the top had a strain gauge affixed to both the under side and top side. The deep beams were only tested on the short (5’) span.

The test setup for the depth series is nearly the same as the width series, but a 100 kip load head was used in order to reach higher applied loads. Recall in the results section for the depth series it was determined that stiffness values cannot be accurately determined for short span tests. Thus

the idea of collecting deflection data became less important and the tests focused on collecting data on transverse compression of the wood members above the supports using LVDTs and strain in the FRP using gauges. See Figure 5 for the FRP strip arrangement and strain gauging for the deep beams. The testing procedure for the depth series is the same as the width series.

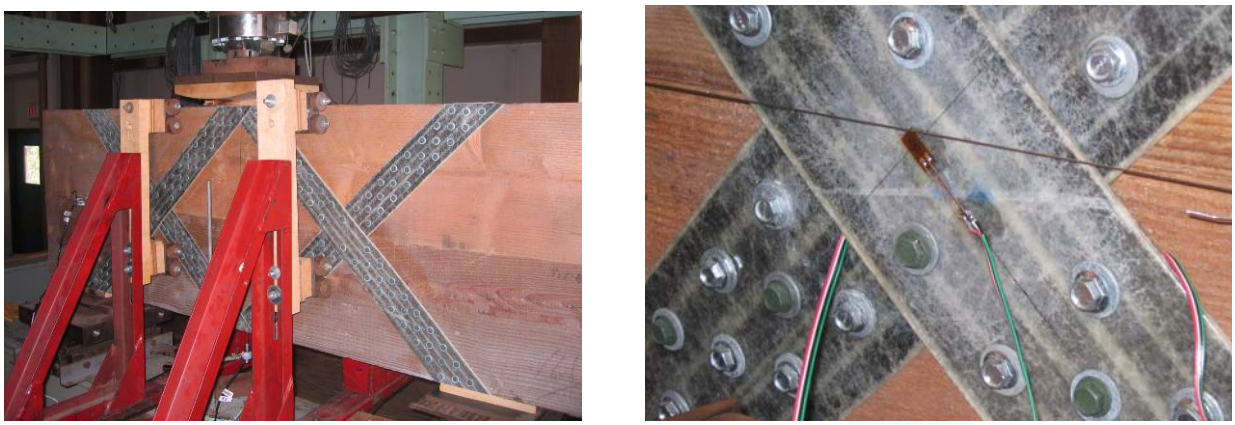

FIGURE 5. (A) STRIP GEOMETRY (B) STRAIN GAUGES IN PLACE DURING TESTING.

RESULTS – SERIES 2 - DEPTH SERIES

The strain readings from the FRP X-braced strips are shown in Figure 6. There is one curve for the strain gauge on the top surface of the bottom (tension) strip and a curve from each the top surface and bottom surface of the top (compression) strip. A fourth curve is plotted which represents the addition of the tension reading from the top surface and the compression reading of the bottom surface of the buckling strip, giving the resultant axial strain in the FRP.

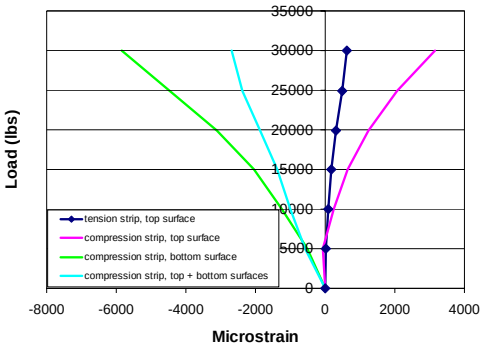

FIGURE 6. STRAIN DATA FOR AN X BRACED DEEP BEAM

From the strain values in Figure 6 the stress and axial force in the FRP strips can be calculated. At the maximum transverse load of 30,000 lbs the maximum axial (normal) stress in the tension strip was 5640 psi and the axial forces is 2820 lbs. The axial (normal) stress in the compression strip at the maximum transverse load was 23,500 psi and the axial load was 11,750 lbs. The maximum flexural stress in the post buckled compression strip was 56,000 psi. All the stresses were significantly less than the strength of the strip (152 ksi). The compression strips, by nature

of the span being the equal to the depths of the beams, extended directly from the load head to the support. Because there was a direct load path, these strips saw the most load and almost immediately showed signs of buckling, thus the higher stresses than the tension strip.

TESTING – SERIES 3 - FULL SCALE SERIES

12” x 12” x 20’ beams were provided by Wisconsin & Southern Railroad Company. They were creosote treated pile caps exactly like the timbers used in bridge construction. The beams were trimmed to 14’ lengths to be the same size as pile caps installed in the timber trestle bridges under study. Single beams and stacked beams were tested. Currently being tested are various FRP configurations meant to distribute applied loads more evenly to piles. These results will be reported at a later date.

The full scale test setup utilizes 5 load cells which support the beam on 14” diameter steel plates, meant to simulate the size of in situ piles. A 100 kip load cell applied the loading to the beam via 2 load heads placed 5’ apart to simulate where the stringers would transfer load to the pile caps. 24” steel plates are used between the load heads and the timber specimen to simulate the exact size of the stringers. Figure 7 shows the test setup.

FIGURE 7. FULL SCALE TEST SETUP

Data was collected using the same methods as the width series tests. The monitored channels were 5 load cells which gave a reading of the reactions under the beam and 2 LVDTs over the intermediate piles which gave readings of the compression in the timber. 2 LVDTs also recorded the slip between two beams when applicable. For the first round of testing, the load cells (representing piles) were placed at the spacing specified in the design of the bridges, being 30 inches between intermediate and center piles and 33 inches between outer and intermediate piles. This spacing renders a safe load distribution to piles [AREMA, 2006]. Next, the load cell supports were moved to a non ideal spacing which was identified in the Westbrook 2006 report as being the worst case in terms of pile over loading: 36 inches between intermediate and center piles and 27 inches between outer and intermediate piles.

The test procedure for the full scale tests was similar to that of the width series. The setup was larger in scale, and the applied loads were larger, but the instrumentation used was the same.

The specimens were loaded at a rate of 4000 lb/min with a pre-load of about 100 lbs. Once the maximum load was reached, loading was removed and data collection stopped.

RESULTS – SERIES 3 - FULL SCALE SERIES

Data were plotted showing the distribution of load to each pile, both for the ideal and non ideal spacing. As expected, the ideal spacing gave load distributions similar to those predicted by the AREMA manual, between 20 and 25% for the center pile, 25 and 30% for the intermediate piles, and 10 and 15% for the outer piles. The non ideal spacing shows a dramatic increase in loading to the center pile. Figure 8 compares the two spacing configurations.

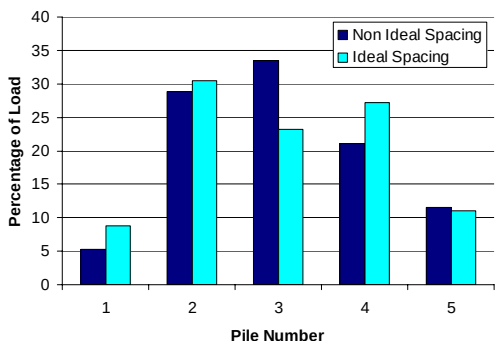

FIGURE 8. PERCENTAGE OF LOADING ON PILES COMPARED BETWEEN IDEAL AND NON IDEAL SPACING.

CONCLUSION

The width series tests show that behavior close to fully composite action can be achieved by using FRP X-bracing for members acting in bending. Load is transferred from the beam to the strips through the Spax® screws effectively. This would be particularly useful for spans which are relatively long. This concept has potential to be applied to stringers which are in need of rehabilitation. While it is not necessary to attach two stacked stringers to one another, a stringer that is experiencing splitting or excessive deformations can be stiffened with MF-FRP strips. The depth series tests allowed an analysis of the stresses within the FRP strips, and showed that even after buckling the strips carry load. This proves that FRP strips can be useful not only in tension, but may have very effective results when used in compression. This opens up the opportunity to use strips in compression directly under the loading to be able to transfer the load to a desired location, which is an example of truss action. The full scale series tests show that while piles may be safe with the design spacing and loads, this will not be the case when piles are incorrectly spaced. Misalignment can lead to load redistribution so that one pile, particularly the center one, is being overloaded. This overload situation will only worsen when heavier rail cars are used. In order to extend the service life of bridges, the load must be distributed more evenly to all of the piles. Currently many of the outer piles are only seeing around 5% of the total applied load. By transferring some of the load away from the center pile and to the outer piles, the overall capacity of the pile cap is increased and the bridge is safer to use for a longer period of time. The results from the depth series show that MF-FRP strips may be used in compression. Further lab testing will show how effective using tension and compression FRP

strips will be to redistribute the load. FRP strips show a high potential to be used in the rehabilitation of pile caps for the purpose of increasing load capacity required of higher railcar loads thereby extending the service life of a timber trestle bridge.

ACKNOWLEDGEMENT

This research was supported by the Midwest Regional University Transportation Center (MRUTC) under grant number MRUTC 08-02.

REFERENCES

[1] A. Akbiyik, A.J. Lamanna, and W.M. Hale, 2007, "Feasibility Investigation of the Shear Repair of Timber Stringers with Horizontal Splits," *Construction and Building Materials*, Vol. 21, pp. 991-1000.

[2] A.J. Lamanna, L.C. Bank and D.W. Scott, 2001, "Flexural Strengthening of RC Beams using Fasteners and FRP Strips," *ACI Structures Journal*, Vol. 98, No. 3, pp. 368-376.

[3] AREMA, Manual for Railway Engineering, Chapter 7 – Timber, 2006, The American Railway Engineering and Maintenance-of-Way Association, Lanham, MD.

[4] D.D. Dempsey and D.W. Scott, 2006, "Wood Members Strengthened with Mechanically Fastened FRP Strips," *Journal of Composites for Construction*, Vol. 10, No. 5, pp 392-398.

[5] D.W. Radford, D. Van Goethem, R.M. Gutkowski, and M.L. Peterson, 2002, Composite Repair of Timber Structures," *Construction and Building Materials*, Vol. 16, pp. 417-425.

[6] L.C. Bank and D. Arora, 2007, "Analysis and Design of RC Beams with Mechanically Fastened FRP (MF-FRP) Strips," *Composite Structures*, Vol. 79, No. 2, pp. 180-191.

[7] Westbrook Associated Engineers, Inc. "Impact of Railcar Weight Change on Wisconsin Bridges," May 2006, WisDOT Project ID 0092-05-13.

In: Proceedings of the 2008 structures congress: Cross borders. American Society of Civil Engineers. 2008 April 24-26. Vancouver, BC, Canada. 10 p. Proceedings on CD. 2008