The influence of juvenile wood content on shear parallel, compression, and tension perpendicular to grain strength and mode I fracture toughness of loblolly pine at various ring orientation

David E. Kretschmann*

Abstract

Forest products from improved trees grown on managed plantations and harvested in short rotations will contain higher proportions of juvenile wood than in current harvests. More information is needed on the influence of juvenile wood on lumber properties. Most information developed to date has concentrated on ultimate tensile stress, modulus of rupture, and modulus of elasticity. This paper shows for this sample of loblolly pine three-dimensional surfaces fit to test results for shear stress parallel to the grain, compression and tension stress perpendicular to the grain, and mode I fracture toughness for various percentages of juvenile wood content and ring orientations. The properties of more than 340 small specimens for each property tested made from clearwood taken from lumber produced from logs harvested in a 28-year-old fast-grown plantation of loblolly pine in North Carolina were determined. Three-dimensional polynomial surfaces dependant on juvenile wood content and ring orientation were fit to the data. The average strength of all properties decreased with increasing amounts of juvenile wood in the cross section. Shear strength was insensitive to annual ring orientation and seemed to be strongly dependant on reductions in density caused by increased juvenile wood content. Compression and tension perpendicular to the grain strength and stiffness and mode I fracture toughness were very sensitive to juvenile wood content and annual ring orientation.

Forest products from plantations harvested in short rotations will contain higher proportions of juvenile wood than in current harvests. Juvenile wood is the early growth material produced by the tree, usually defined as the material 10 to 20 rings from the pith depending on species. Information is needed on what effect increasing juvenile wood content has on lumber properties. A significant amount of literature exists on the effect of juvenile wood on small clearwood (wood free from obvious defects) test specimens, and dimension lumber in softwoods. This information, however, has been focused primarily on a few mechanical properties like modulus of elasticity (MOE), ultimate tensile stress (UTS), and modulus of rupture (MOR). The objectives of this paper are to 1) report how properties, with less known information, such horizontal shear strength, tension and compression perpendicular to the grain strength and stiffness, and Mode I fracture toughness of fast-growth, plantation-grown loblolly pine (*Pinus taeda*) 2 by 4's are influenced by varying proportions of juvenile wood, and 2) discuss what effect orientation of annular rings has on these results.

Background

In clearwood, the properties that have been found to influence mechanical behavior include fribril angle, cell length, and specific gravity (SG), the latter a composite of percent latewood, cell wall thickness, and lumen diameter (Pearson and

The author is Research General Engineer, USDA Forest Serv., Forest Products Lab., One Gifford Pinchot Dr., Madison, Wisconsin (dkretschmann@fs.fed.us). The author would like to thank the following for their valuable contributions towards completing this project Bob Edlin, Engineering Mechanics Lab Technician, and Robert Hall Clark, Atlanta Summer. This paper was received for publication in February 2007. Article No. 10318.
*Forest Products Society Member.
©Forest Products Society 2008.
Forest Prod. J. 58(7/8):89–96.

Gilmore 1971, Boone and Chudnoff 1972, Bendtsen and Senft 1986, Thornquist 1990, Kucera 1994, Burdon et al. 2004, Clark et al. 2006). Juvenile wood a high fibril angle which causes excessive longitudinal shrinkage which may be more than 10 times that of mature wood (Ying et al. 1994). Compression wood and spiral grain are also more prevalent in juvenile wood than in mature wood and contribute to excessive longitudinal shrinkage. Futhermore, quality of early juvenile wood near the pith is considerably worse than juvenile wood formed farther from the pith. **Figure 1** illustrates the known trends in wood properties.

In structural lumber, a potential problem of lower mechanical properties of juvenile wood was first observed by Koch (1966) while involved in research to develop straight studs from southern pine veneer cores. Even more evidence of lower mechanical properties of juvenile wood was found by Moody (1970) and Gerhards (1979). While these research studies observed differences between juvenile and mature wood, neither study was designed to effectively measure the differences. In the early 1980s the North American In-Grade Lumber Testing Program was initiated to measure properties of lumber in the grade produced (Forest Products Society 1988). These in-grade lumber studies undoubtedly contained lumber that had juvenile wood in it but were not designed to directly assess the impact of juvenile wood content of lumber jproperties. In the 1980s, researchers also began to assess directly the mechanical properties of juvenile material.

In New Zealand, in-grade testing was completed on radiata pine lumber cut from 40- to 60-year-old (Walford 1982), and from 28-year-old stands (Bier and Collins 1984). In Canada, work by Barrett and Kellogg (1989) and Smith et al. (1991) looked at plantation Douglas-fir and red pine. Also, in the United States several studies were conducted on the bending and tension parallel to the grain properties of Douglas-fir and southern pine dimension lumber cut from plantations (Pearson 1984, Bendtsen et al. 1988, Biblis 1990, MacPeak et al. 1990, Kretschmann and Bendtsen 1992).

In summary, intricate studies of clearwood have produced a clear understanding of the physical property changes that occur as juvenile wood matures and of their effect on MOR, compression parallel to the grain, and MOE. A number of studies on solid sawn timber provide a good understanding of the effect of juvenile wood on MOR, UTS, and MOE. The information available on the effects of juvenile wood on other properties sometimes critical for design such as horizontal shear stress, tensile stress transverse to grain (T-perp), and compressive stress transverse to grain (C-perp), however, are minimal in comparison. This paper is meant to provide some information on how various proportions of juvenile wood at different ring orientations might change these lesser known clearwood properties.

Expermental methods

Origin of sample material

The sample material was obtained from 700 610-mm (2-ft) sections taken from the undamaged ends of 2.4-m (8-ft) 38 by 89 mm (2 by 4 in) tension specimens for which the percent juvenile content had been previously determined (Kretschmann and Bendtsen 1992). Juvenile wood for this material and geographic location was defined as anything less than or equal to the eighth growth ring. Grids were placed on the ends of boards and the proportion of these blocks inside and outside of the eighth growth ring established The lumber for this study came from one hundred trees cut from a 28-year-old plantation in Beaufort County, North Carolina owned by the Weyerhaeuser Co. The seed source was unknown, but it was known that the seeds were not from a genetically improved source. The plantation site was an old farm field, not a forested site, and had a site index of 69. The plantation was thinned twice (1973 and 1981) and fertilized at least once (1979 to 1980). This management regime was typical of that anticipated by the Weyerhaeuser Co., at that time, for the production of sawtimber trees in the future. The sample trees averaged 409 mm (16.1 inches) in diameter at breast height (DBH), ranging between 280 to 490 mm (11 to 19.3 inches). About half the trees fell in the diameter range of 355 to 420 mm (14 to 16.5 inches).

Specimen preparation and testing

The approximately 700 short 610-mm (2-foot) sections of 2 by 4's were sorted into seven categories (0, 1 to 20, 21 to 40, 41 to 60, 61 to 80, 81 to 99, 100) representing proportion of juvenile wood content and divided equally into two groups. One of these two groups was used to cut out shear and compression perpendicular (C-perp) to grain clearwood specimens. The results of these tests had previously been reported Kretschmann (1997). The other sections were each cut into a Mode I compact tension fracture specimen and three tension perpendicular to the grain specimens. A complete discussion of sample preparation and selection is reported in Kretschmann (2008). The short sections were stored in a conditioned space at 70 °F and 65 percent relative humidity (RH). Care was taken to center the specimens in a location on the wide face of the board which provided the most uniformity of ring orientation across a given test specimen. The dimensions of the specimens were measured using a digital caliper.

Shear. — The dimensions of the shear parallel to the grain specimen used are shown in **Figure 2.** Testing of the shear block specimens was in accordance with the ASTM standard D143 (ASTM 1996a), except for the specimen width and varied ring orientation. Loading head movement rate was 0.6 mm/minute (0.024 inches/minute). The 1-1/2 inch thick specimen has been shown to be an acceptable substitution for the standard 2-inch-wide specimen (Bendtsen and Porter 1978). Each test specimen was classified into one of five relalive ring orientations; 0°, 22.5°, 45°, 67.5°, and 90° (**Fig. 2**). After testing, density was determined for each specimen using ASTM D2395 (ASTM 1996a) procedures.

C-perp. — The C-perp specimen size was 51 by 38 by 203 mm (2 by 1.5 by 8 in), as shown in **Figure 3,** which has been shown to give similar results as the 51- by 51-mm (2- by 2-in) specimen by Kenesh (1968). The load was applied to the 38-mm- (1.5-in) wide face (**Fig. 3**). Loading head movement rate was 0.3 mm/minute (0.0 12 in/minute). Load deflection information was collected electronically up to 2.5 mm (0.1 in) deflection. In addition to load deflection information, each test specimen was classified into one of five relative ring orientations; 0°, 22.5°, 45°, 67.5°, and 90°. To determine the 1 mm (0.04 in) deflection compressive stress, a linear regression was fit to the portion of the curve between 20 and 40 percent of the maximum load. This curve was then passed through the origin. The load for the 1 mm (0.04 in) deflection was then taken from this origin. After testing, density was determined for each specimen according to ASTM D2395 (ASTM 1996a).

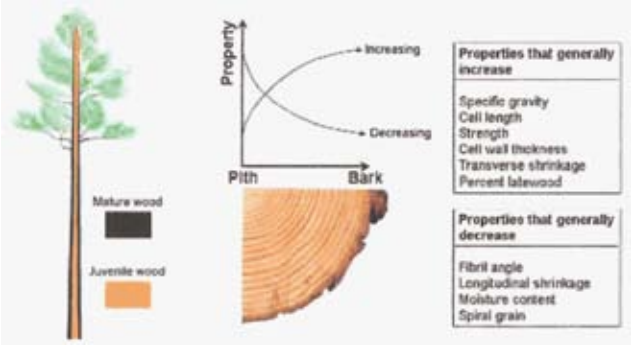

Figure 1. — Juvenile wood's impact on wood properties.

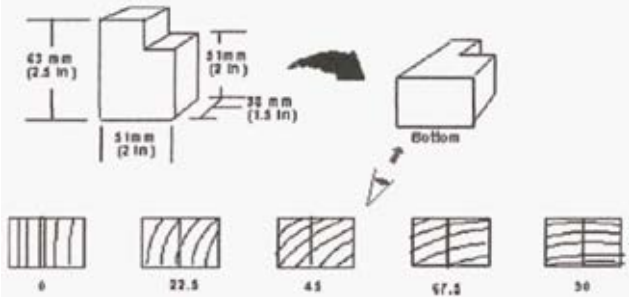

Figure 2. —Shear parallel to the grain specimen and orientations tabulated.

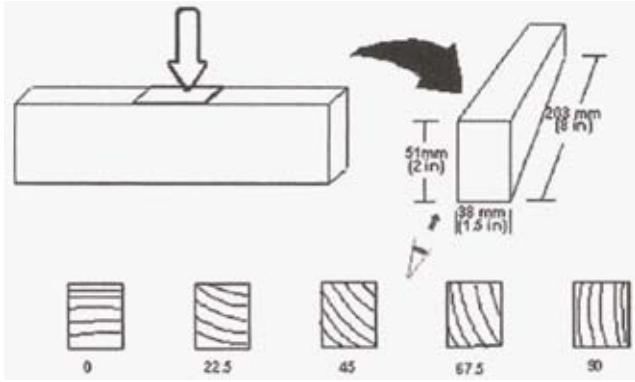

Figure 3. — compression perpendicular to the grain specimen dimensions and orientations recorded.

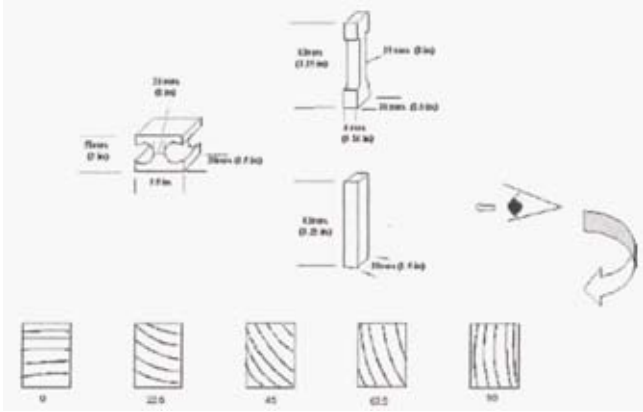

Figure 4. — Three types of test specimens for tension perpendicular to the grain test.

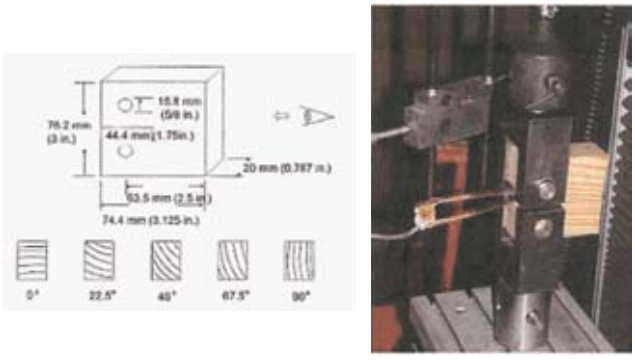

Figure 5. — Test specimen and test set-up for mode I fracture testing.

T-perp. — Three types of tension perpendicular (T-perp) to grain specimens were tested (**Fig. 4**): 1) A modified ASTM D143 (ASTM 1996a) specimen. The load was applied to the 25 mm (1 in) by 38 mm (1.5 in) wide face; 2) a dog-bone style specimen that was 38 by 83 by 4 mm (1.5 by 3.5 by 0.16 in) that was 25 mm (1 in) wide at the center; and 3) a wafer specimen that was 38 by 83 by 4 mm (1.5 by 3.5 by 0.16 in). The T-perp specimens were cut sequentially along the length of the original section creating side by side specimens, Loading head movement rate was 0.3 mm/minute (0.012 in/minute). Load deflection information was collected electronically until 2.5 mm (0.1 in) deflection for the dog bone and the wafer specimens to allow for calculation of MOE. Each test specimen was classified into one of the five relative ring orientations previously mentioned. More details and comparisons of the test results between the three methods can be found in Kretschmann (2008).

Mode I fracture. — No ASTM standard exists for wood fracture testing so a modified ASTM E1820 compact tension specimen was used (ASTM 1996b). The Mode I fracture test specimen and test set-up used is shown in **Figure 5.** Each test specimen was classified into one of five relative ring orientations; 0°, 22.5°, 45°, 67.5°, and 90° and weighed. A small blade was used to create a sharp crack tip prior to testing. Testing was conducted in an environmentally controlled room at 72 °F and 65 percent RH, Testing was conducted on a 1000-lb_f universal test machine using a cross–head speed of 0.60 mm/min (0.024 in/min). The specimens were suspended in hangers by two clevises. The rate of cross head movement resulted in a time to failure of 1.5 to 3 minutes. Loads were recorded with a 100-lb load cell and crack opening displacement (COD) was measured using a clip gauge extensometer centered by a supporting packet. Crack opening displacement and load were recorded on an interfaced microcomputer. Recording was stopped after the load had returned io approximately 2/3 the maximum load. After testing, the specimens were ovendried to determine MC and SG using ASTM D2395 (1996a).

Results

The results shown in this paper are based on interpretations of data produced from the clearwood study described in the methods section and summarized in a Forest Products Laboratory Research Report (Kretschmann 2008). The three-dimensional fits are meant to give a visual representation of

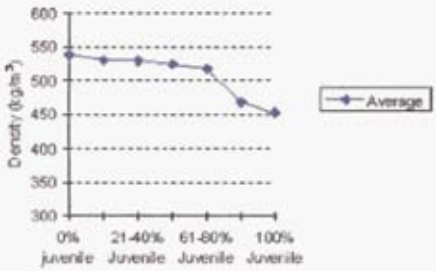

Figure 6. — the effect of percent juvenile wood on density (results shown are for C-perp specimens).

what impact Juvenile wood and ring orientation have on the lesser investigated clearwood properties (shear, C-pep, T-perp, and KIc) for this plantation are not meant to be taken as equations representing all loblolly pines. When starting this study, there were a limited number of short sections remaining from the previous tension study (Kretschmann and Bendtsen 1992) to choose from. It was hoped that there would be sufficient numbers to get a representative average in all the various juvenile wood content-orientation combinations, and as it turned out, there was fairly good distribution of specimens throughout the possible cells. Twenty-eight of the possible 35 test cells had 5 or more specimens. The averages obtained from the testing were weighted according to sample size to give the most representative fit to the test data.

Density

The average density, based on ovendry weight and volume at time of test, of time plantation test specimens was 520 kg/m^3 (0.46 specific gravity (SG)), which was 10 percent less than the species average of 570 kg/m^3 (0.51 SG) (USDA Forest Serv. 1999). As expected, the density decreased as the percent juvenile wood increased. The largest decrease in density occurred for specimens between 61 to 80 and 81 to 99 percent more juvenile wood content (**Fig. 6**). This reflects the drastic change in properties as you near the pith illustrated in **Figure 1.** The 100 percent juvenile wood material density was approximately 15 percent lower than the 0 percent juvenile wood material.

Moisture content

All cells were conditioned to similar moisture content (MC) values of approximately 11 percent moisture with an average coefficient of variation (COV) of 9 percent. The shear specimens tended to be slightly dryer than the compression perpendicular to the grain specimens. The tension perpendicular to the grain and fracture specimens were closer to 12 percent MC again with a COV of about 9 percent.

Effect of juvenile wood content and ring orientation

Table 1 summarizes the polynomial fit to the average values for the 35 possible combinations of ring and juvenile wood content. For the material tested, juvenile wood content had a noticeable effect on all properties investigatged. **Figures 7** through **13** illustrate juvenile wood effects on shear, compression and tension perpendicular to the grain, and Mode I fracture at various levels of juvenile wood content. Ring orientation had limited impact on shear strength but had noticeable effects on the other properties. Extreme changes in ring orientation can in many cases have a larger effect on properties than extreme changes in juvenile wood content. The various percentage changes reported for each property are the extremes of the predicted changes from 0 percent juvenile wood and 0 degree ring orientation.

Horizontal shear strength. — The shear results appear to have been governed primarily by the juvenile wood content and were affected little by ring orientation, changing by no more than 5 percent. All orientations appeared to follow the same general trend (**Fig. 7**). As would be suggested by the lower average density, the overall test average for shear strength of the sample, 8.18 MPa (1190 psi), was less than the species average given in ASTM D2555 (1996), 9.58 MPa (1390 psi). The average change in shear strength of 1.2 MPa (180 psi) between mature and juvenile material, a drop of roughly 16 percent was similar to what would be predicted from the change in density using a published shear-density relationship for softwoods (USDA Forest Serv. 1999).

Compression perpendicular to the grain strength. — The surface fit to C-perp stress at 1 mm (0.04 in) deflection and MOE are shown in **Figures 8** and **9.** C-perp stress decreased with increasing juvenile wood content by a maximum of 15 percent and increased with increasing ring orientation by as much as 56 percent (**Fig. 8**). The C-perp stresses for loads applied to the radial face were less sensitive to increases in juvenile wood content, a maximum decrease of 10 percent, than C-perp stresses for loads applied to the tangential face a maximum decrease of 15 percent. The C-perp stress at 1 mm (0.04 in) deflection was greatly increased by loading on the radial face. The test results for the 90 degree orientation were examined more closely in Kretschmann (2008) since ASTM D143 suggests loading the specimens on the radial surface (the 90 degree orientation, **Fig. 3**). The overall average for C-perp stress of the 90 degree orientation was 10.5 MPa (1524 psi) which was more than the species average prediction using the dry/green ratio from ASTM D2555 (1996) of 9.3 MPa (1350 psi). The estimated change in properties that would be predicted from the change in density based on equations found in USDA Forest Serv. (1994) is 1.3 MPa (190 psi) while the observed shift was more than double that at 2.8 MPa (400 pi). It appears that more factors are involved in the shift C-perp stress than just density. The MOE in C-perp was very sensitive to ring orientation dropping by as much as 40 percent in the 45 degree orientation and less sensitive to changes in juvenile wood content for a given orientation (Fig. 9) changing by a maximum of 12 percent The C-perp MOE values for ring orientation of 90 degrees were about 6 percent lower than the 0 degree values for the game level of juvenile wood content.

Tension perpendicular to the grain strength. — The T-perp testing as illustrated in **Figure 4** contained a side study that looked at three types of specimens (ASTM, thin dog bone, and thin slice). When the results of this side study were examined, the ASTM specimens were strongly correlated to the dog-bone specimen results (Kretschmann 2008). ASTM specimens were on average 25 percent weaker than the dog-bone specimen beause of the stress concentration created by the geometry of the ASTM standard specimen. This difference in T-perp stress is similar to results reported by Markwardt and Youngquist in 1956 and Kunhne 1951. The dog bone specimens were more affected by the ring orientation than the ASTM specimens, but the trends for the surfaces were the

Table 1. — Parameters for polynomial surfaces fit to test data. (% JW) percent juvenile wood is in percent, (ROR) ring orientation is in degrees, and Y is in units shown with property.[1]

	$Y = Yo + (\%JW) + b(ROR) + c(\%JW)^2 + d(ROR)^2$						
Property	Y0	a	B	c	d	Adj r^2	SEE
Shear (psi)	1256.2	0.84	0.62	−0.028	-0.014	0.60	60.9
C-perp (psi)	1086.5	−2.01	−1.56	0.0042	0.082	0.81	111.8
C-perp MOE (10^6 psi)	0.137	0.0002	-0.0022	−2.94e-6	2.31e−5	0.69	0.014
T-perp dog bone (psi)	804.1	0.084	−2.35	−0.017	−0.0096	0.84	49.0
T-perp ASTM (psi)	516.6	-0.38	1.028	−0.0029	−0.025	0.63	40.0
T-perp MOE (10^6 psi)	0.138	−2.78e-5	0.0029	-1.68e−6	2.74e−5	0.78	0.012
KI_c (lbf/in^2 in$^{1/2}$)	411.6	−0.30	−0.053	-0.0022	-0.0115	0.65	26.2

Adjusted r^2: r^2 that takes into account the number of parameters in regression model.
SEE: standard error of the estimate.
[1]The curves were fit to binned data (ring orientation 0, 22.5, 45, 67.5, 90, and juvenile wood content 0, 10, 30, 50, 70, 90, 100).

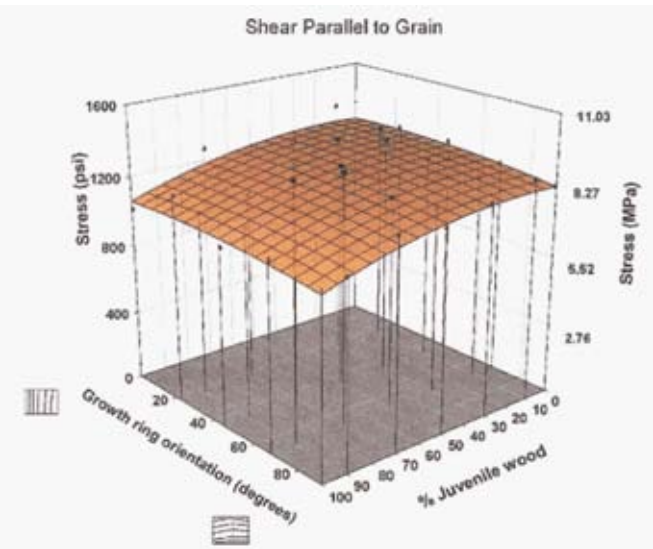

Figure 7. — The effect of juvenile wood on horizontal shear strength parallel to the grain for various orientations.

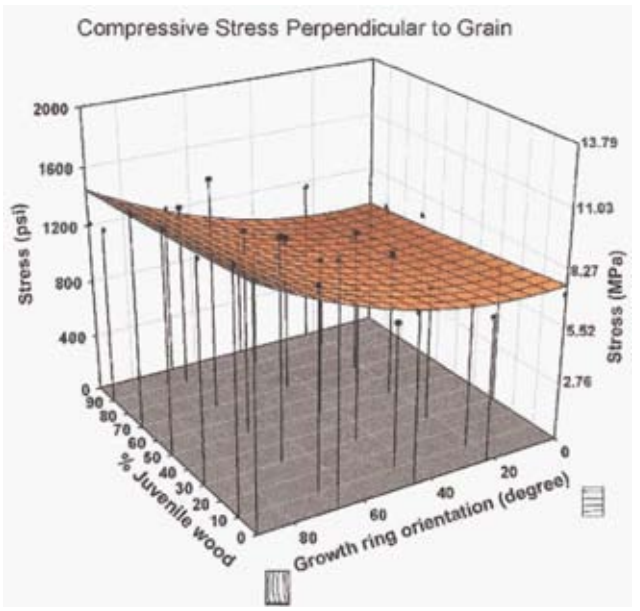

Figure 8. — The effect of juvenile wood on compressive stress perpendicular to the grain stress at 1 mm. (0.04 in) displacement for various orientations.

same (**Figs. 10, 11**). T-perp strength decreased with increasing juvenile wood content, down a maximum of 6 percent ASTM and 32 percent dog bone, and decreased with increasing ring orientation down a maximum of 24 percent for ASTM and 45 percent for dog bone. The T-perp stresses for loads applied in the radial direction were less sensitive to increases in juvenile wood content than T-perp stresses for loads applied in the tangential direction. T-perp stresses decreased by a maximum of 20 percent in the radial direction while they decreased by a maximum of 32 percent in the tangential direction. It is felt by the author that because of the severe stress concentration created by the ASTM specimen, the dog bone specimens give a closer representation of the true tension perpendicular to the grain strength of the test material.

The estimates of MOE from the T-perp response to juvenile wood content and ring orientation were measured on the dog bone specimens and are shown in **Figure 12.** Like C-perp MOE, T-perp MOE was very sensitive to ring Orientation and less sensitive to changes in juvenile wood content for a given orientation. The MOE in T-perp dropped by as much as 65 percent in the 45 degree orientation and was more sensitive to changes in juvenile wood content, dropping by a maximum of 32 percent (**Fig. 12**). The T-perp MOE values for ring orientation of 90 degrees were about 30 percent lower than the 0 degree values for the same level of juvenile wood content

The difference in sensitivity for the two MOE values can be further illustrated by the superimposed C-perp MOE and T-perp MOE surfaces shown in **Figure 13.** The MOE values showed similarities, but C-perp MOE (top surface) was much less sensitive to changes in ring orientation and juvenile wood content.

Mode I fracture toughness. — The surfaces fit to Mode I fracture toughness (KI_c) showing the effects of juvenile wood and ring orientation are shown in **Figure 14.** The change in KI_c followed closely the trend demonstrated in the tension perpendicular to the grain tests. Comparisons could be made directly between the T-perp and KI_c clearwood properties since matched specimens were used. These comparisons showed a linear relationship between the KI_c fracture toughness of a sample and the tension perpendicular stress (Kretschmann 2008). KI_c values decreased with increasing juvenile wood content with a maximum drop of 16 percent. The

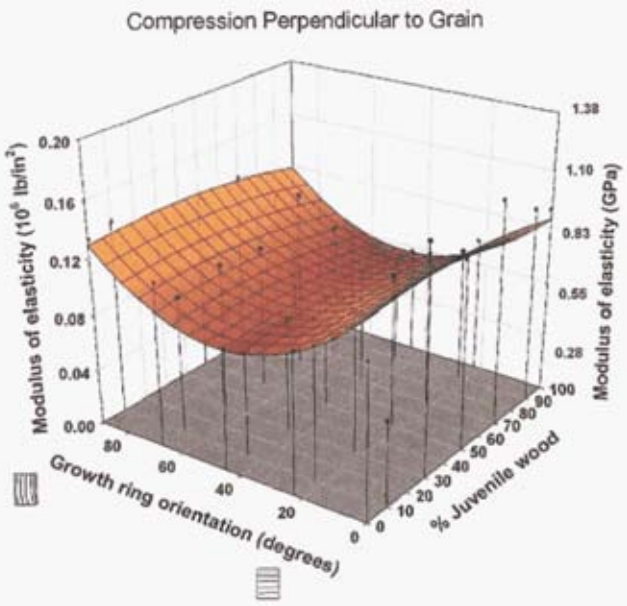

Figure 9. — The effect of juvenile wood on compressive stress perpendicular to the grain modulus of elasticity for various orientations.

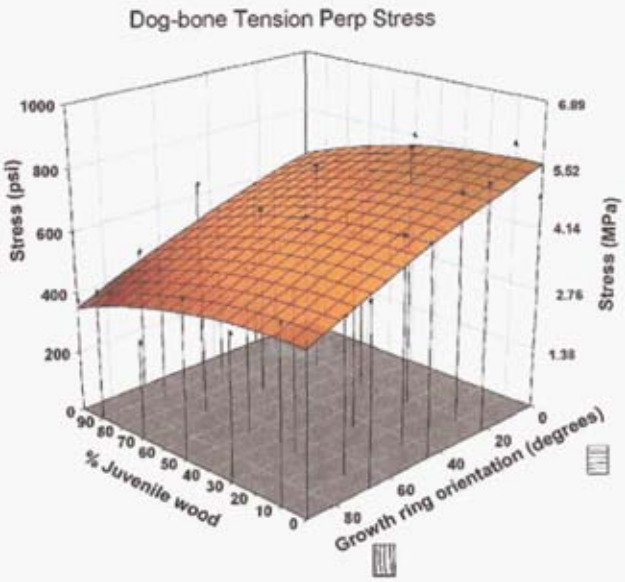

Figure 11. — the effect of juvenile wood on the tension perpendicular to the grain dog bone specimen stress at various grain orientations.

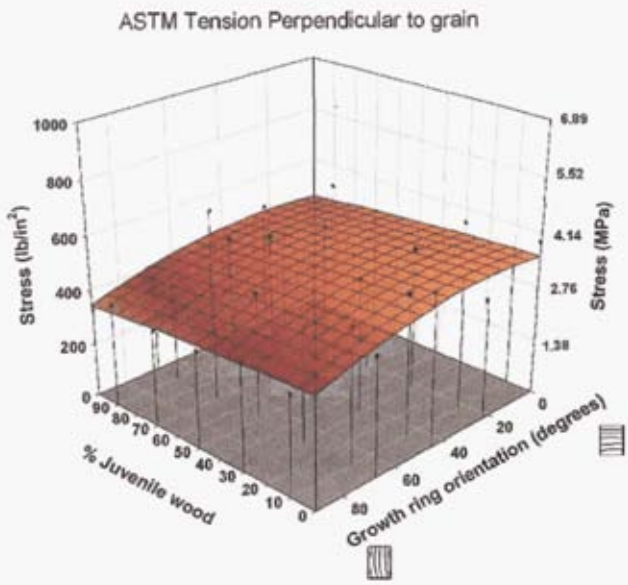

Figure 10. — The effect of juvenile wood content on ASTM 143 tension perpendicular specimen stress at cvarious grain orientations.

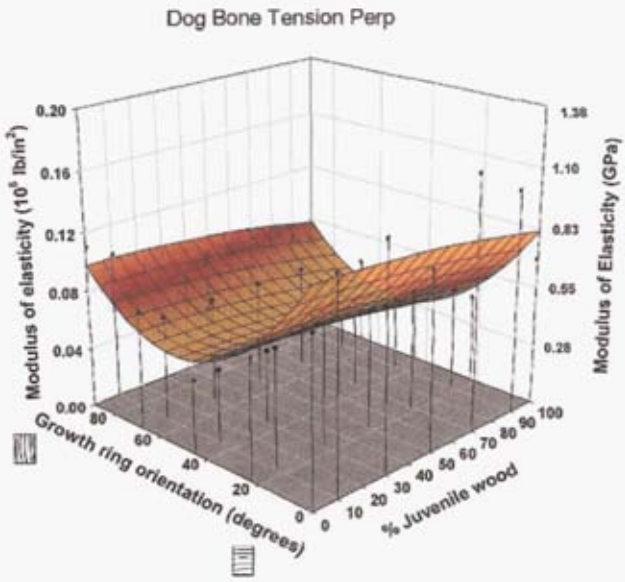

Figure 12. — The effect5 of juvenile wood on modulus of elasticity for tension perpendicular to the grain at varoius orientations.

KI_c value decreased with increasing ring orientation with a maximum drop of 27 percent.

Conclusions

The three-dimensional plots are meant to give a visual representation of what impact juvenile wood content and ring orientation can have on the lesser investigated clearwood properties (shear, C-perp, T-perp, and KI_c) The equations presented in **Table 1** are the best fits to the data collected from one plantation and are smoother than the actual behavior of the material. These equations are not meant to be taken as equations representing all loblolly pines. The trends presented, however, give an indication of the affect juvenile wood has on the investigated clearwood properties. A number of conclusions can be drawn from this sample of loblolly pine:

- Shear strength is relatively insensitive to annual ring orientation and changes in shear strength increases in juvenile wood content are similar in magnitude to changes in density. Therefore designs sensitive to shear may see little impact from an increase juvenile wood content.
- C-perp and T-perp strength and stiffness and KIc, at all levels of juvenile wood content, are sensitive to changes

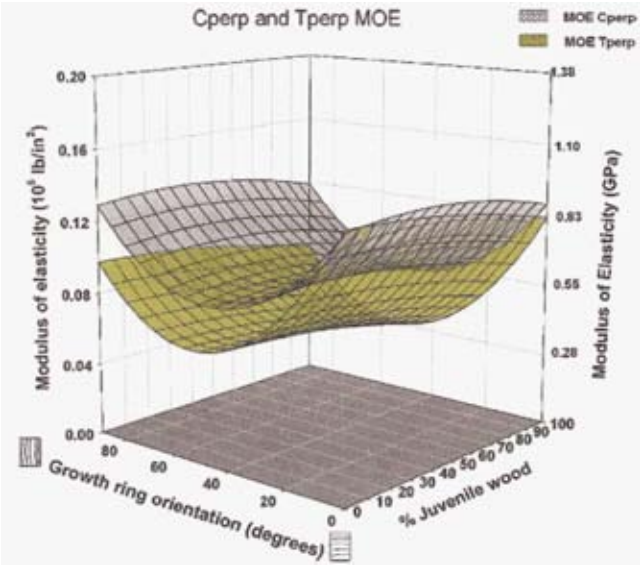

Figure 13. — Similarity of compression and tension perpendicular to the grain MOE.

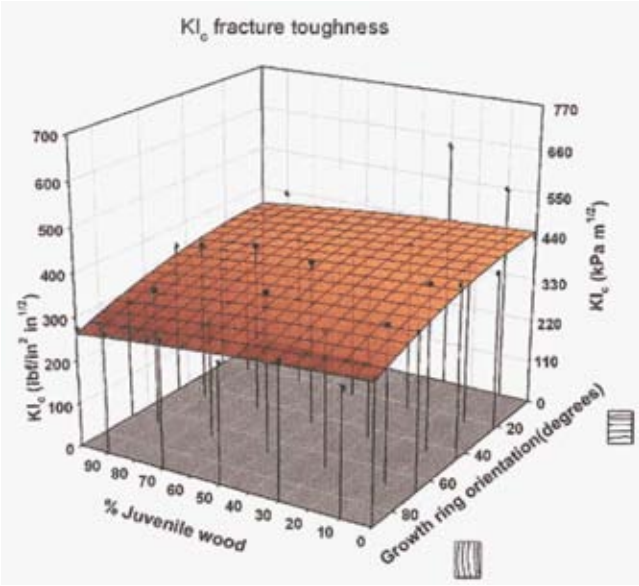

Figure 14. — The effect of juvenile wood on mode I fracture toughness (KI_c) at various grain orientations.

in ring orientation with T-perp MOE being the most sensitive. Extreme changes in ring orientation can in many cases have a larger effect on properties than extreme changes in juvenile wood content. This suggests that ring orientation may play a more critical role in designs sensitive to these properties than the mount of juvenile wood present.

- C-perp strength for loads applied to the tangential face are more sensitive to juvenile wood content than C-perp strength with loads applied to the radial face while T-perp strength for loads applied in the tangential direction are less sensitive to changes in juvenile content then T-perp strength for loads applied to the radial direction.
- Tension perpendicular to the grain MOE is more sensitive to ring orientation and juvenile wood content than Compression perpendicular to the grain MOE.
- The impact of juvenile wood content and ring orientation on tension perpendicular to the grain strength results is similar to the results from KI_c fracture toughness tests. The determination of one of these properties could potentially be used as an estimate of the other.

Literature cited

American Soc. for Testing and Materials (ASTM). 1996a. Annual Book of Standards, Section 4 Construction, Volume 10 Wood, D-143-94, Standard Methods for Testing Small Clear Specimens of Timbers; D-2395-93, Standard Test Methods for Specific Gravity of Wood and Wood-Based Materials; D-2555-88, Standard Test Methods for Establishing Clear Wood Strength Values. ASTM, West Conshohocken, Pennsylvania

_____. 1996b. Annual Book of Standards, Section 3 Metals Test Methods and Analytical procedures, Volume 1 Metals — Mechanical Testing; Elevated and Low-Temperature Tests; Metallography; E 1820-01 Standard Test Method for Measurement of Fracture Toughness. ASTM, West Conshohocken, Pennsylvania.

Barrett, J.D. and R.M. Kellogg. 1989. Second Growth Douglas-fir: Its Management and Conversion for Value. Chapter 5, Strength and stiffness of dimension lumber. SP-32 ISSN 0824-2119. Forintek Canada Corp. pp 50-58.

Bendtsen, B.A. and S. Porter. 1978. Comparison of results from standard 2-inch with 1-1/2–inchshear block tests. Forest Prod. J. 28(7):54—56.

_____ and J. Senft. 1986. Mechanical and anatomical properties in individual growth rings of Plantation-grown eastern cottonwood and loblolly pine. Wood and Fiber Sci. 18(1)23—38.

_____ P.L. Plantinga, and T.A. Snellgrove. 1988. The influence of juvenile wood on the mechanical properties of 2 × 4's cut from Douglas-fir plantations. *In*: Proc. 1988 Inter. Conf. on Timber Engineering, volume 1.

Biblis, E.J. 1990. Properties and grade yield of lumber from a 27-year-old slash pine plantation. Forest Prod. J. 40(3)21-24.

Bier, H. and M.J. Collins. 1984. Bending properties of 100 × 50 mm structural timber from a 28-year-old stand of New Zealand radiata pine. New Zealand FS Reprint 1774. Presented to IUFRO Group S5.02. Xalapa, Mexico, Dec. 1984.

Boone, R.S. and M. Chudnoff. 1972. Compression wood formation and other characteristics of plantation-grown *Pinus caribaea*. USDA Forest Serv. Res. Pap. ITF–13. Inst. Trop. Forestry, Puerto Rico.

Burdon, R.D., R.P. Kibblewhite, J.C.F. Walker, R.A. Megraw, R. Evans, and D.J. Cown. 2004. Juvenile versus mature wood: A new concept, orthogonal to corewood versus outerwood, with special reference to Pinus radiate, and P. Taeda. Forest Sci. 50(4):399-415.

Clark, A., III, R.F. Daniels, and L. Jordan. 2006. Juvenile/mature wood transition in loblolly pine as defined by annual ring specific gravity, proportion of late wood, and microfibril angle. Wood and Fiber Sci. 38(2):292–299.

Forest Products Soc. 1988. Proc. of the Workshop on In-Grade Testing of Structural Lumber, Madison, Wisconsin, April 25-26, 1988. Proc. 47363. pp. 44-55.

Gerhards, C.C. 1979. Effect of high-temperature drying on tensile strength of Douglas-fir 2 by 4's. Forest Prod. J. 29(3):39-46.

Kenesh,R.H. 1968.Strength and elastic properties of wood in transverse compression. Forest Prod. J. 18(1):65-72.

Kretschmann, D.E. 2008. Influence of juvenile wood content on shear parallel, compression and tension transverse to grain strength and mode I fracture toughness for loblolly pine. Res. Pap. FPL-RP-647. USDA Forest Serv., Forest Products Lab., Madison, Wisconsin. 25 pp.

_____. 1997. Effect of juvenile wood on shear parallel and compression perpendicular to grain strength for loblolly pine. *In*: Proc. CTIA/IUFRO Int. Wood Quality Workshop, Timber Management Toward Wood Quality and End Product Value, Quebec City. pp. 23-30.

_____ and B.A. Bendtsen. 1992. Ultimate tensile stress and modulus of elasticity of fast-grown plantation loblolly pine lumber. Wood and Fiber Sci. 24(2):184-203.

Koch, P. 1966. Straight studs from southern pine veneer cores. USDA Forest Serv. Res. Pap. SO-25. Southern Forest Expt. Sta., New Orleans, Louisiana. 35 pp.

Kucera, B. 1994. A hypothesis relating current annual height increment to juvenile wood formation in Norway spruce. Wood and Fiber Sci. 26(1):152–167.

MacPeak, M.D., L.F. Burkart and D. Weldon. 1990. Comparison of grade, yield, and mechanical properties of lumber produced from young fast-grown and older slow-grown planted slash pine. Forest Prod. J. 40(1):11–14.

Markwardt, L.J. and W.G. Younquist. 1956. Tension test methods for wood, wood-base materials and sandwich construction. Rept. no. 2055. USDA Forest Serv., Forest Lab., Madison, Wisconsin.

Moody, R.C. 1970. Tensile strength of fingerjoints in pith-associated and nonpith-associated southern pine lumber. Res. Pap. FPL 138. USDA Forest Serv., Forest Products Lab., Madison, Wisconsin

Pearson, R.G. and R.C. Gilmore. 1971. Characterization of the strength ofjuvenile wood of loblolly pine. Forest Prod J. 21(1)23-30.

_____. 1984. Characteristics of structural importance of clear wood and lumber from fast-grown loblolly pine stands. *In*: Symp. on Utilization of the Changing Wood Resource in the Southern United States. North Carolina State Univ., June 12–13,1984.

Smith, I., S. Alkan, and Y.H. Chui. 1991. Variation of dynamic properties and static bending strength of a plantation grown red pine. J. of the Inst. of Wood Sci. 12(4):221–224.

Thornquist, T. 1990. Juvenile wood in coniferous trees. Rept. No. 10. The Swedish Univ. of Agri. Sciences, Dept. of Forest-Industry-Market Studies.

USDA Forest Serv. 1999. Wood handbook—wood as an engineering material. Gen. Tech. Rept. FPL-GTR-113. USDA Forest Serv., Forest Products Lab., Madison, Wisconsin. 463 pp.

Walford, G.B. 1982 Current knowledge of the in-grade bending strength of New Zealand radiata pine. FRI Bulletin no. 15. New Zealand

Ying, L., D.E. Kretschmann, and B.A. Bendtsen. 1994. Longitudinal shrinkage in fast-grown loblolly pine plantation wood. Forest Prod. J. 44(1):58-62.