In Situ Materials and Structural Assessment of Stress-Laminated Deck Bridge Treated with Chromate Copper Arsenate

T. Russell Gentry, James P. Wacker, Karl N. Brohammer, and John Wells

A bridge consisting of three 6.7-m spans with a stress-laminated deck was constructed in 1991 in the Spirit Creek State Forest near Augusta, Georgia. The bridge was constructed by the Georgia Forestry Commission, with guidance from the U.S. Department of Agriculture, Forest Service, Forest Products Laboratory (FPL). Water-borne chromated copper arsenate lumber was used for the deck, instead of the oil-borne preservatives recommended by AASHTO. The bridge was initially monitored by FPL and remained in service from 1994 to 2001 with no maintenance, at which time the bridge was inspected and load tested and the posttensioning bars were restressed. In 2005 the bridge was again inspected and load tested, and the bars were retensioned. The results of the inspection and load tests are presented. The overall condition of the bridge is reported, along with details on the moisture condition, overall deck deflection, and timber strains under load. Details on the loss of posttensioning forces in the bars, and an investigation of the causes of this loss, are presented.

Stress-laminated bridge decks consist of multiple plies of dimension lumber held together with posttensioning bars. These decks were originally developed in Canada in the late 1970s as a strategy for rehabilitating decks that had initially been mechanically joined by using nails or other fasteners (*1*). In the United States, they were first considered for new construction in the late 1980s. A large number of these decks were built in the 1990s in the United States as a consequence of National Timber Bridge Initiative (*2*). Many of these decks were built by local governments, in single- and double-lane roads with low traffic volumes.

Stress-laminated decks are used primarily with the laminations parallel to the direction of traffic, on bridges with no longitudinal stringers. The decks bear directly on bridge pier caps or abutments. Given the commonly available depths of solid sawn lumber (250 to 400 mm), the span of these decks is generally limited to around 12 m (*3*). One of the distinct advantages of this bridge type is the ability to construct the bridge deck in self-supporting panels, which can be built of off-the-shelf lumber and installed by using relatively light construction equipment.

T. R. Gentry, Advanced Wood Products Laboratory, College of Architecture, Georgia Institute of Technology, 247 4th Street, Atlanta, GA 30332-0155. J. P. Wacker, Forest Products Laboratory, USDA Forest Service, 1 Gifford Pinchot Drive, Madison, WI 53726. K. N. Brohammer, Advanced Wood Products Laboratory, College of Architecture, Georgia Institute of Technology, 676 Marietta Street, Northwest, Atlanta, GA 30318-0159. J. Wells, Georgia Forestry Commission, P.O. Box 819, Macon, GA 31202-0819. Corresponding author: T. R. Gentry, russell.gentry@coa.gatech.edu.

Transportation Research Record: Journal of the Transportation Research Board, No. 2028, Transportation Research Board of the National Academies, Washington, D.C., 2007, pp. 28–33.
DOI: 10.3141/2028-04

BRIDGE CONFIGURATION AND CONSTRUCTION

The bridge discussed in this study was constructed in the Spirit Creek State Forest near Augusta, Georgia, in 1991. The bridge was designed and constructed as a cooperative demonstration by the USDA Forest Service and the Georgia Forestry Commission. Materials for the bridge were sourced locally and were donated by local forest products companies. The bridge decks were assembled on site and placed by a small crane by Georgia Forestry Commission staff.

The bridge consists of three single-lane 6.7-m simple spans having 2 × 12 (38 × 286 mm) No. 2 boards for the deck (Figure 1). The three decks were founded on treated pine pilings, caps, and headwalls. All lumber was southern pine, pressured treated with chromated copper arsenate (CCA) treatment applied in a water-borne process. This differs from the AASHTO recommendations for using only oil-borne treatments in timbers used for transportation structures (*4*). Water-borne treatments are thought to add to movement in treated wood because of the high initial moisture content, especially when the wood is exposed to changing weather conditions. This movement can lead to internal stresses in the wood and subsequent damage caused by redrying (checking, etc.) Shupe et al. indicated that this lack of dimensional stability is caused by excessive moisture from the water-borne process and not by the treatment chemicals (*5*). It is also possible that high initial moisture contents in the deck plies may lead to greater transverse stress relaxation and subsequent loss of deck posttensioning.

Pressure treatment level was 9.6 kg/m^3 for bridge superstructure elements and 12.8 kg/m^3 for the piles. The laminations in the deck were butt jointed. Plies were stressed with 18 25-mm Dywidag posttensioning bars spaced at 1.2 m. The design force in the bars was 240 kN, which provided an interlaminar compressive stress of 0.69 MPa between the laminations. Design drawings for the bridge show that the bridge was designed for a deflection limit of L/360 and for a camber of 37 mm. Photographs from the original construction and discussions with people involved with the construction of the bridge indicate that the camber called for was not achieved. The bridge was designed and installed just before the publication of the U.S. national design guide for stress laminated bridges, and the

FIGURE 1 Spirit Creek Bridge at time of construction (1991).

design deflection requirements and details differ somewhat from the national standard (*6*).

The bridge was installed with three different wearing surface conditions. The south span was installed with no wearing surface; the central span was installed with an asphalt overlay; and the north span was installed with an asphalt wearing surface and moisture barrier at the interface. An asphalt wearing surface was added to the south span on the bridge sometime in the late 1990s. Although the design drawings call for a 50-mm asphalt overlay, the actual depth of the overlay was measured as 150 mm at the crown in 2005 (tapering to 50 mm at the curb).

INSTALLATION OF BRIDGE AND EARLY MONITORING

The bridge was installed in 1991 by using donated materials and semiskilled labor provided by the Georgia Forestry Commission. The funding for the bridge installation and assessment came from the Timber Bridge Initiative, created by Congress in 1988. As part of its participation, the USDA Forest Service Forest Products Laboratory oversaw the initial stressing of the laminations and monitored the stress in six of the posttensioning bars for the 30 months after the installation. Of specific interest in this bridge was the loss of posttensioning caused by transverse stress relaxation in the CCA-treated wood deck. Figure 2 depicts the residual forces in 6 of the 18 rods (two rods in each of the three spans) for the first 28 months after the completion of the bridge. Locations of the six load cells are shown in Figure 3.

In early 1994, monitoring of the bar stress level was discontinued. At this time, the six bars in the north span were retensioned, as the force in the bars in this level had uniformly fallen to below 40% of their initial value. Ritter and Hilbrich Lee recommend that restressing take place when bar forces drop to 40% of the design levels (*2*). The bars in the two adjacent spans were not retensioned at this time, and the bridge received no additional maintenance until 2001.

At the time the load cells were removed (March 1994), core samples were taken to assess the moisture contents of the deck top surface (by using the oven-dry method). An increment borer was used to retrieve the samples. The average moisture content in the top deck surface of the south span was 28%. The average of the central span was 16.5%, and the average of the north span was 16%. The highest moisture content was observed in the south span, which at the time was not protected by an asphalt wearing surface.

INSPECTION, ASSESSMENT, AND MAINTENANCE OF BRIDGE

The bridge was inspected in 2001 by a team of researchers from the Advanced Wood Products Laboratory at Georgia Tech and staff from the Georgia Forestry Commission. The goal of the first inspection visit was to assess the overall condition of the bridge, to restress the posttensioning bars, and to load test the bridge. In 2005, the same team

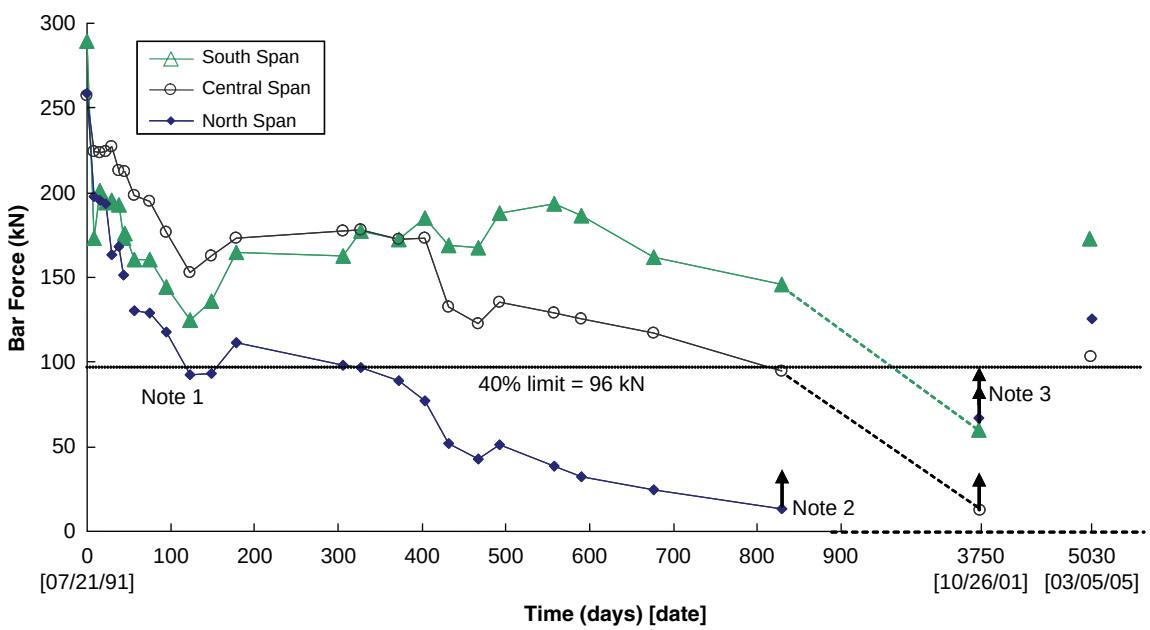

FIGURE 2 Loss of posttensioning in six bars (1991–2005). North span data use only one load cell after 75 days because of failure of one cell. North span was retensioned at 829 days, and all bars were retensioned at 3,750 days.

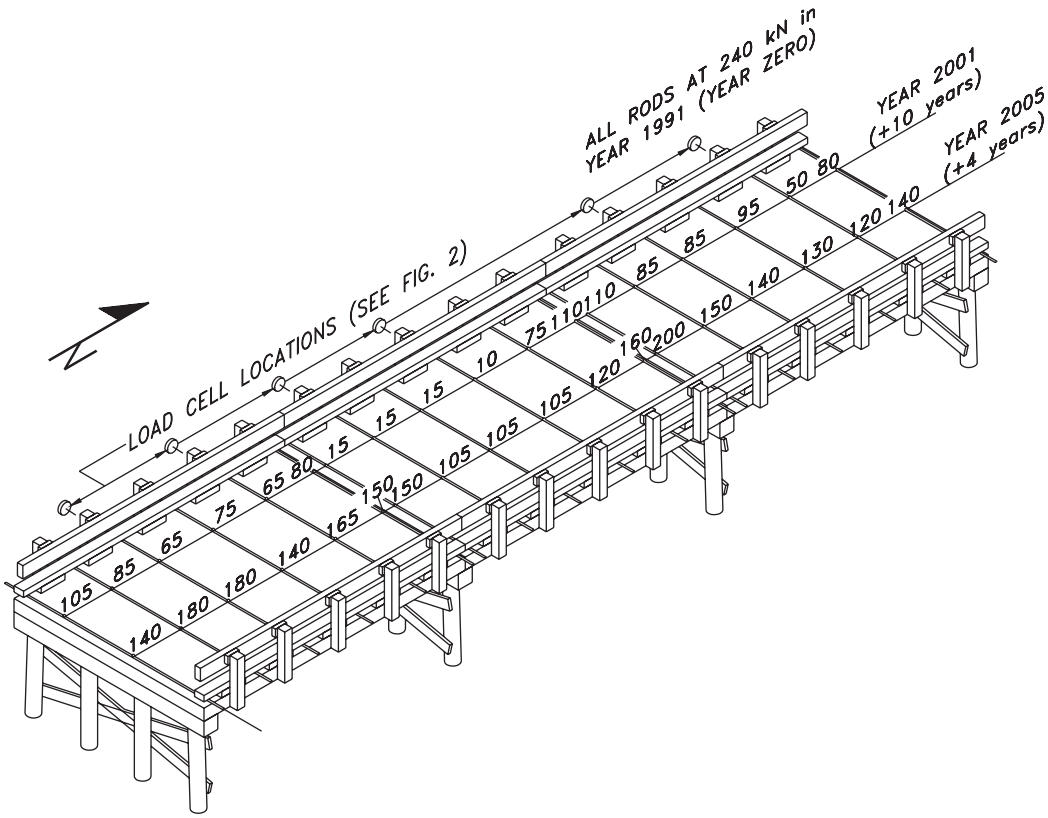

FIGURE 3 Residual posttensioning forces in Dywidag bars, 2001 and 2005 (kN).

returned to the bridge and repeated the inspection regimen. Each inspection visit included the following set of assessments and tests:

- Moisture tests in wood members,
- Measurement of existing bar forces,
- Restress of posttensioning bars,
- Photo documentation of bridge site,
- Load test with deflection and longitudinal strain measurements (after restressing), and
- In situ vibration tests (frequency and mode shapes), in 2005 only.

Most guidelines for the maintenance of stress-laminated bridges recommend that the stress in the posttensioning bars be checked annually for the first 2 years of the bridge's life and then once every 2 to 4 years afterward (*1, 3*). In this instance, however, the first retensioning came 10 years after the bridge's installation (except for the north span, as previously described). This bridge therefore provides a unique opportunity to assess the condition of a stress-laminated deck that was not maintained according to recommended procedures.

Residual Forces in Posttensioning Bars

In 2001 and 2005, the residual posttensioning forces in the bars were assessed by using the nut turn method (*3*). This method uses a hydraulic hand pump and cylinder, with a calibrated pressure gauge, to measure the force in the bar when the nut on the posttensioning bar becomes free. Although the assessment team does not have exact measurements of the level of forces in the bars as installed in 1991, it is known that the design-level force in the bars was 240 kN and that the USDA Forest Products Laboratory (FPL) recommendations for jacking of bars was followed when the bridge was installed. The forces in 6 of the 18 bars were measured, as shown in Figure 2.

These residual forces as measured in 2001 and 2005 are shown in Figure 3. Bar forces are reported to the nearest 5 kN, as this is considered a reasonable degree of confidence in the measurement given the method and equipment used for checking the bars. In 2001, 10 years after the bridge was constructed, the average force in the bars was 70 kN, or about 30% of the original design force. A number of the bars at the central span had forces as low as 10 kN, indicating that these bars were essentially loose. At the high end, some bars had residual forces of 110 kN, almost 50% of the original force. Ritter et al. indicate that a drop of interlaminar stress to 0.15 MPa (approximately 25% of the original stress) is necessary to allow the laminations to slip relative to one another (*1*).

Early work by Batchelor predicted that losses in posttensioning forces would be limited to around 50% and that the rate of stress-loss over time would go to zero (*7*). Later work by Oliva et al. showed that losses could be much higher than 50%, and in one experiment the rate of stress-loss over time did not go to zero (*8*). Oliva et al. also indicate that moisture cycling is a primary cause of stress-loss. The central span of the Spirit Creek Bridge is directly over the creek, and the creek is generally dry under the end spans. Assessment of moisture content in the bridge deck is not sufficient to indicate whether the laminations in the central span are at a higher moisture content than the end spans. Future work is planned to address this limitation.

The central span of the bridge was installed with an asphalt wearing surface, and the average dead load imposed on the span because of this load is around 150 kg/m^2. The north span of the bridge was also installed with an asphalt wearing surface, but this span does not show

the level of posttensioning losses as compared with the central span. As noted previously, the bars in the north span were retensioned in 1994, and this may account for the reduced losses in the north span.

Although the residual bar forces were quite low, there was no evidence of slippage between the wood laminations in the 2001 assessment. Any lamination misalignments noted in 2001 appeared to correspond to those shown in photographs taken at the time of construction.

In the 2005 assessment, the force in the bars was measured again by using the same procedure. The average force in the bars was 145 kN (60% of the 2001 retensioning force), with the low being 105 kN (45% of the 2001 retensioning force). Once again, the lowest residual forces were found in three bars in the central span of the bridge. In 2005, none of the bars had dropped to the level recommended as the minimum (40% of initial or 96 kN) before retensioning is required.

Moisture Content in Bridge Elements

In 2001 and 2005, moisture contents in readily accessible elements of the bridge were taken by using a Lignomat G1000 moisture meter with an E12 electrode and 50-mm pins. Representative moisture contents observed in 2005 are shown in Figure 4. At locations along the side of the deck, moistures contents were taken just adjacent to the posttension bar bearing plates. At the top of the deck, the moisture contents were taken underneath the asphalt wearing surface at the centerline of the roadway and at the curb (where no asphalt was present).

At Location A, approximately 150 mm asphalt was removed to reveal the top portion of the wood deck. There was no moisture barrier between the asphalt at the deck at this location. The wood at surface of the deck in this location was essentially saturated and was found to be soft. The moisture reading from the meter was 100%.

At Location B, which was on the deck beneath the guardrail, approximately 50 mm dirt and debris was present. The moisture content here was 68%. At Locations C and D, taken adjacent to the posttensioning bar bearing plates, the moisture contents were 41% and 28%.

In all locations, the moisture contents were considered to be high, and it may be that moisture contents are correlated with the loss in posttensioning force observed. Yazdani et al. completed a parametric study of stress-laminated wood decks and included considerations of moisture in this study (*9*). Both this work and earlier work by others (Oliva, Batchelor) indicate that moisture cycling leads to loss of posttensioning force. What is not clear is whether high moisture contents lead to increased transverse compressive creep of the wood—which would then lead to subsequent posttensioning losses. This phenomenon is not described in the stress-laminated deck literature. Pellicane et al. described a model for the transverse compression of wood (*10*). Unfortunately, it is not clear how this analytical work can be extended to include the effects of moisture cycling.

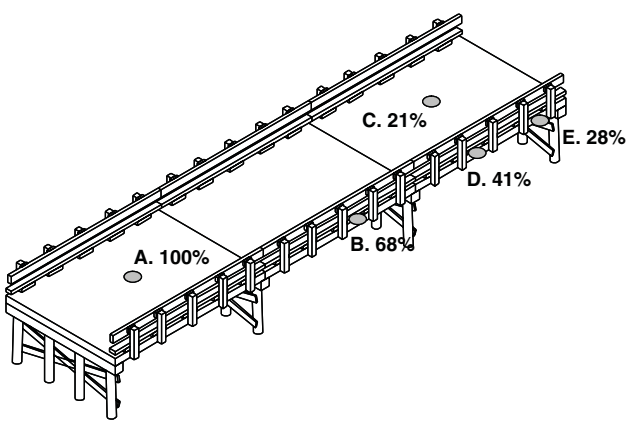

FIGURE 4 Moisture contents from 2005 assessment. Spot moisture readings: A, top of deck, beneath wearing surface; B, top of deck, at curb; C, underneath deck, at midspan; D, side of deck, at curb; and E, side of deck, at curb.

Moisture readings at the Spirit Creek Bridge taken in 2005 are much higher than those taken in case studies reported by Wacker and Ritter (*11*) and by Wacker et al. (*12*) and higher than those recorded by FPL in 1994 (see previous discussion). Future work is anticipated at the Spirit Creek site to confirm moisture readings by the pin-resistance and oven-dry methods and to determine whether high moisture readings are leading to loss of internal integrity in the wood members. Correlation with oven-dry measurements will be required, as pin-resistance measurements are less accurate at high moisture levels and require correction when used with treated lumber (ASTM D4444-92).

Load Test Data

In both 2001 and 2005, a load test was performed. Load test data from the 2005 assessment are presented and discussed here. The bridge was loaded with a Georgia Forestry Commission truck (three-axle) and trailer (two-axle), carrying a fire plow. The weight of the truck was 180 kN (on one steering and two nonsteering axles), and the weight of the trailer was 125 kN. This load is slightly below the standard HS-20 loading (rear axle approximately 13% low), which was the design loading for the deck. During the load test the truck moved across the bridge in 1.2-m increments, from north to south. At each load station, the truck was stopped and deflection and longitudinal strains in the wood deck were measured. A graph of deck deflection as function of truck position is given in Figure 5. A graph of longitudinal strain as a function of truck position is given in Figure 6.

Deflections were measured at midspan of the north and south spans with a string potentiometer (north span) and laser distometer (south span) with an accuracy of ±0.1 mm. The maximum absolute deflection observed was 6.4 mm. This equates to a deflection ratio of L/960 of the clear span, which is only one-third the design-allowable deflection of L/360. This might be considered surprising given that the 2 × 12 deck is at the upper bound suggested by AASHTO given the span (*6*). In many instances, however, it is the limit on transverse flexural stresses and not deflection or longitudinal stresses that controls the design of stress-laminated bridge decks. In laboratory testing, Oliva et al. showed that deflections in decks with butt joints show substantially more deflection than decks with full-length laminations (*8*). The load test on the Spirit Creek Bridge, which has butt joints in all three spans, demonstrates that this additional deflection is probably not significant in a full-scale structure.

Longitudinal strains were taken only on the north span (Figure 5). Three gauges were used to record strain. Gauge SG1 was located at the centerline of the bridge, at midspan. Gauge SG2 was located at the edge of the bridge, directly under the loaded tire, at midspan. Gauge EXT2 was adjacent to Gauge SG2. The SG gauges were bonded resistance strain gauges with a 100-m gauge length. Gauge EXT2 was a screw-on extensometer that was joined to the wood lamination

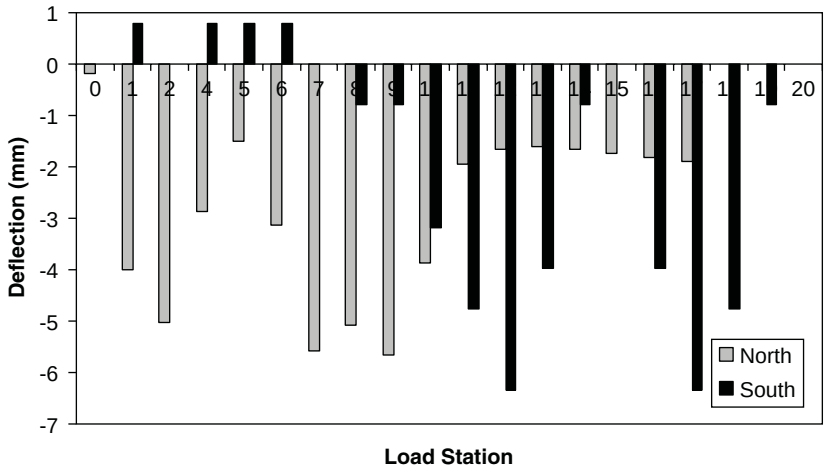

FIGURE 5 Deflection under moving truck load (mm), Spirit Creek Bridge.

by using wood screws. Initial readings of EXT2 appear to be quite close to SG2, but subsequent readings lead to conclusion that EXT2 may have slipped relative to SG2 and thus provides a low-biased reading.

The maximum strain read in any of the gauges was 194 με, recorded in Gauge SG2 at Load Station 9 when the rear axle of the trailer was directly at the midspan of the north span. At this point, the centerline gauge read 132 με. Although there is an obvious strain lag across the bridge deck, it can be concluded that the centerline gauges are participating substantially in the flexural capacity of the bridge.

Assuming a modulus of elasticity of around 10 GPa for No. 2 southern pine and a peak strain of 200 με, this equates to a flexural stress in the wood of approximately 2 MPa in the wood under the load of the trailer.

CONCLUSIONS

The overall condition of the Spirit Creek Bridge is good, especially given the lack of maintenance in its 15-year life. Although there is some localized evidence of wood degradation, most of the wood is sound. Load testing indicates that the bridge is in excellent overall shape and that the observed longitudinal stresses and deflections under load are well below the as-designed allowables.

Loss of posttensioning forces in bars in the period from 1991 to 2001 was excessive. Although no transverse slippage of the laminations was noted in the 2001 inspection, this may have been because of lack of heavy vehicle loading. Posttensioning losses in the 4-year period of 2001 to 2005 are in the acceptable range (assuming that 50% loss is expected as per the 1983 Ontario Bridge Code), indicating that a 4-year period between retensioning is acceptable.

High moisture contents observed in the laminations at the top of the deck and at the side laminations may be contributing to premature loss of posttensioning forces in the bars. Data acquired to date are insufficient to confirm this suspicion. Future assessment protocols will be modified to probe the correlation between moisture content and level of residual bar force.

ACKNOWLEDGMENTS

The assistance of the USDA Forest Products Laboratory, the Georgia Forestry Commission, and the Georgia Department of Transportation in the completion of this study is acknowledged.

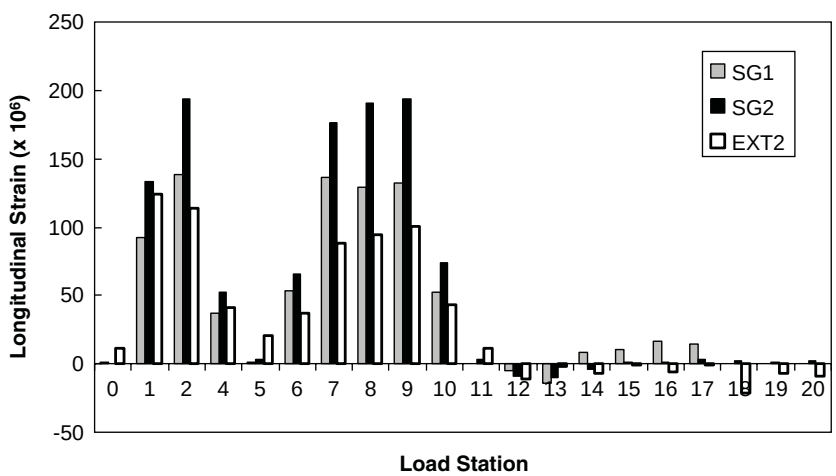

FIGURE 6 Observed strains in deck under moving truck load (2005), Spirit Creek Bridge, north span.

REFERENCES

1. Ritter, M. A., S. R. Duwadi, and J. P. Wacker. Field Performance of Stress-Laminated Timber Bridges. In *Transportation Research Record: Journal of the Transportation Research Board, No. 1740,* TRB, National Research Council, Washington, D.C., 2000, pp. 96–103.
2. Ritter, M. A., and P. D. Hilbrich Lee. Recommended Construction Practices for Stress-Laminated Wood Decks. *Proc., International Wood Engineering Conference,* New Orleans, La., Vol. 1, 1996, pp. 237–244.
3. Ritter, M. A. *Timber Bridges: Design, Construction, Inspection and Maintenance*. U.S. Department of Agriculture, 1990.
4. *AASHTO Standard Specification for Highway Bridges,* 17th ed. AASHTO, Washington, D.C., 2002.
5. Shupe, T. F., S. T. Lebow, E. T. Choong, and M. Xiong. Inadequate Redrying Linked to Dimensional Instability of CCA-Treated Southern Pine Lumber. *Forest Products Journal,* Vol. 51, No. 5, 2000, pp. 59–62.
6. *Guide Specifications for the Design of Stress-Laminated Wood Decks.* AASHTO, Washington, D.C., 1991.
7. Batchelor, B., K. Van Dalen, A. Hachborn, and A. Lee. *Structural Characteristics of Transversely Prestressed Laminated Wood Deck.* Report OJT CERP 8305. Queen's University, Department of Civil Engineering, Kingston, Ontario, Canada, 1979.
8. Oliva, M. G., Dimakis, A. G., Ritter, M. Al, and R. Tuomi. *Stress-Laminated Wood Bridge Decks: Experimental and Analytical Evaluations.* FPL-RP-495. Forest Products Laboratory, USDA Forest Service, 1990.
9. Yazdani, N., J. O. Kadnar, J. A. Kainz, and M. Ritter. Parametric Study on Behavior of Stress-Laminated Southern Pine Bridge Decks. In *Transportation Research Record: Journal of the Transportation Research Board, No. 1740,* TRB, National Research Council, Washington, D.C., 2000, pp. 85–95.
10. Pellicane, P. J., J. Bodig, and A. L. Mrema. Behavior of Wood in Transverse Compression. *Journal of Testing and Evaluation,* Vol. 22, No. 4, 1994, pp. 383–387.
11. Wacker, J. P., and M. A. Ritter. *Field Performance of Timber Bridges: 4. Graves Crossing Stress-Laminated Deck Bridge.* FPL–RP–539. Forest Products Laboratory, USDA Forest Service, 1995.
12. Wacker, J. P., M. A. Ritter, and D. Conger. *Field Performance of Timber Bridges: 8. Lynches Woods Park Stress-Laminated Deck Bridge.* FPL–RP–551. Forest Products Laboratory, USDA Forest Service, 1995.

The conclusions stated in this paper are those of the authors and do not represent consensus opinions of the agencies named in the acknowledgments.

The General Structures Committee sponsored publication of this paper.

In: Transportation research record No. 2028: Journal of the Transportation Research Board, Washington, DC: pp. 28-33; 2007