Chapter 9—Inspection of Timber Structures Using Stress Wave Timing Nondestructive Evaluation Tools

Roy E Pellerin
Professor Emeritus
Washington State University, Pullman, Washington

Robert J. Ross
Project Leader
Forest Products Laboratory, Madison, Wisconsin

The purpose of this chapter is to provide guidelines on the application and use of the stress wave timing inspection method in locating and defining areas of decay in timber structures. Practical procedures for field testing, workable forms for gathering evaluation data, and guidelines for interpreting data are provided. This information was derived from research that quantified the ability of stress wave timers to detect decay in wood, from laboratory and field studies of deteriorated timber bridges, and most importantly from the experience of timber bridge inspectors familiar with the use of these devices. Properties of wood and important aspects of wood deterioration are also reviewed to provide those who are unfamiliar with wood the basic information necessary to detect decay.

These guidelines are intended for inspectors. Explanations are given of the operation and use of stress wave equipment for the nondestrictive testing of timber structures.

Principles of Stress Wave Nondestructive Testing for Condition Assessment

As an introduction, a schematic of the stress wave concept for detecting decay within a rectangular wood member is shown in **Figure 9.1.** First, a stress wave is induced by striking the specimen with an impact device that is instrumented with an accelerometer that emits a start signal to a timber. A second accelerometer, which is held in contact with the other side of the specimen, senses the leading edge of the propagating stress wave and sends a stop signal to the timer. The elapsed time for the stress wave to propagate between the accelerometers is displayed on the timber.

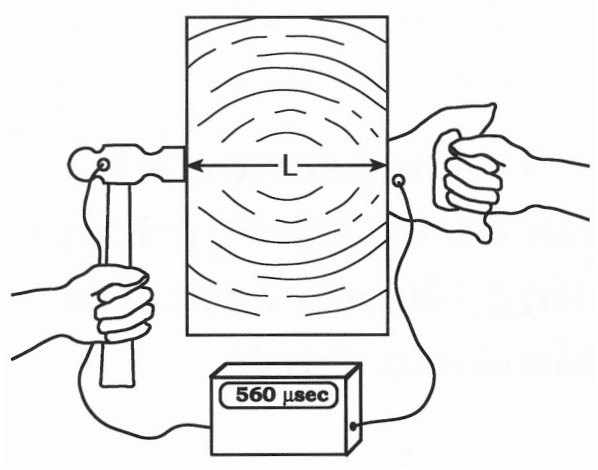

Figure 9.1 —*Stress wave timer.*

Considerable confusion exists in regards to the terms ultrasonic and sonic. The velocity at which a stress wave travels in a member is dependent upon the properties of the member only. The term ultrasonic and sonic refer only to the frequency of excitation used to impart a wave into the member. All commercially available timing units, if calibrated and operated according to the manufacturer's recommendations, yield comparable results.

The use of stress wave velocity to detect wood decay in timber bridges and other structures is limited only by access to the structural members under consideration. It is especially useful on thick timbers or glulam timbers ≥89 mm (≥3.5 in.) where hammer sounding is not effective. Access to both sides of the member is required.

Because timber is an organic substance, material properties and strength vary in accordance with the direction timber is hammered compared with the cell structure orientation. Hammering the end grain of a beam or post will cause a primarily longitudinal shock wave along the length of the cell structure in the timber. Hammering the side or top of the beam will cause a wave across or transverse to the timber cells. The timber cells are arranged in rings around the center of the tree.

The velocity at which a stress wave propagates in wood, as well as other physical and mechanical properties, is a function of the angle at which the fibers of wood are aligned. For most structural members, fibers of the wood align more or less with the longitudinal axis of the member **(Fig. 9.2).**

Stress wave transmission times on a per length basis for various wood species are summarized in **Table 9.1.** Stress wave transmission times are shortest along the grain (with the fiber) and longest across the grain (perpendicular to fiber). For Douglas-fir and Southern Pine, stress wave transmission times parallel-to-the-fiber are ap-

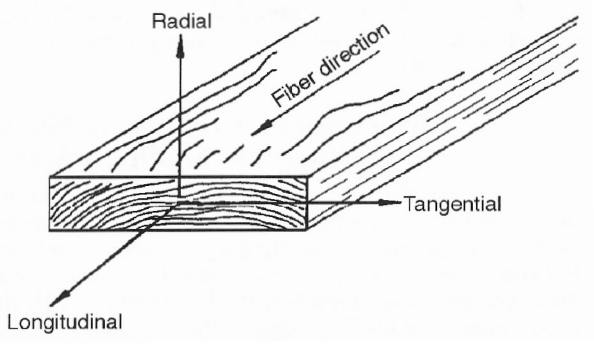

Figure 9.2 —*Three principal axes of wood with respect to grain direction and growth rings.*

Table 9.1—Summary of research on stress wave transmission times R

Reference	Species	Moisture content (% ovendry)	Stress wave transmission time (µs/m (µs/ft.))	
			Parallel to grain	Perpendicular to grain
Smulski (1991)	Sugar maple	12	256–194 (78–59)	—
	Yellow birch	11	230–180 (70–55)	—
	White ash	12	252–197 (77–60)	—
	Red oak	11	262–200 (80–61)	—
Armstrong *et al.* (1991)	Birch	4–6	213–174 (65–53)	715–676 (218–206)
	Yellow-poplar	4–6	194–174 (59–53)	715–676 (218–206)
	Black cherry	4–6	207–184 (63–56)	689–620 (210–189)
	Red oak	4–6	226–177 (69–54)	646–571 (197–174)
Elvery and Nwokoye (1970)	Several	11	203–167 (62–51)	—
Jung (1979)	Red oak	12	302–226 (92–69)	—
Ihlseng (1878, 1879)	Several	—	272–190 (83–58)	—
Gerhards (1978)	Sitka spruce	10	170 (52)	—
	Southern Pine	9	197 (60)	—
Gerhards (1980)	Douglas-fir	10	203 (62)	—
Gerhards (1982)	Southern Pine	10	197–194 (60–59)	—
Rutherford (1987)	Douglas-fir	12	—	1,092–623 (333–190)
Ross (1982)	Douglas-fir	11	—	850–597 (259–182)
Hoyle and Pellerin (1978)	Douglas-fir	—	—	1,073 (327)
Pellerin *et al.* (1985)	Southern Pine	9	200–170 (61–52)	—
Soltis *et al.* (1992)	Live oak	12	—	613–1,594 (187–486)
Ross *et al.* (1994)	Northern red and white oak	green	—	795 (242)

proximately 200 µs/m (60 µs/ft.). Stress wave transmission times perpendicular to the fiber range from 850 to 1,000 µs/m (259 to 305 µs/ft.).

Effect of Ring Orientation

Researchers have determined that the longest transverse-to-grain transmission times are found at a 45° orientation to the annual rings. The shortest is about 30% faster in a path that is radial **(Fig. 9.3). Table 9.2** and **Figure 9.4** show the stress wave transmission time for wood of good quality at 12% moisture content. These values can vary ±10% for species variation. These times are based on an assumed stress wave transmission time

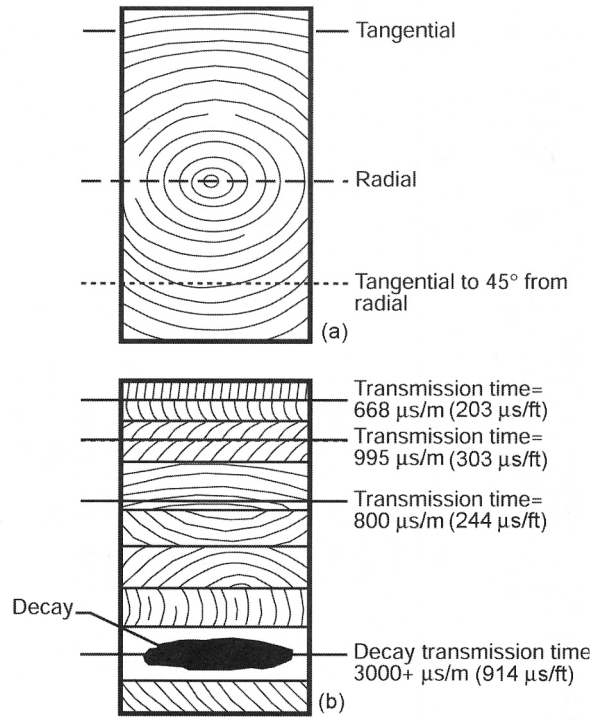

Figure 9.3 —*Transverse stress wave paths and transmission times: (a) timber, (b) glulam beam.*

Table 9.2—Typical stress wave transmission times for nondecayed Douglas-fir at 12% moisture content.

Path length		Stress wave transmission time (µs)		
(mm)	(in.)	Radial	Tangential	45" to grain
64	(2.5)	43	51	64
89	(3.5)	60	71	88
140	(5.5)	94	112	139
184	(7.25)	123	147	183
235	(9.25)	157	188	234
292	(11.5)	195	234	290
342	(13.5)	229	274	340
394	(15.5)	264	315	392
444	(17.5)	297	355	442
495	(19.5)	331	396	492

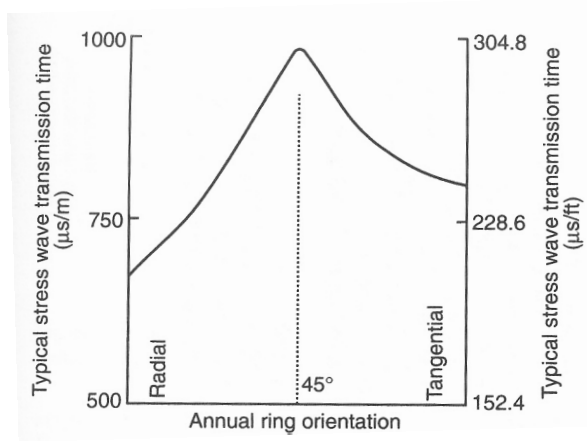

Figure 9.4 —*Transversestress wave transmission time compared with annual ring orientation.*

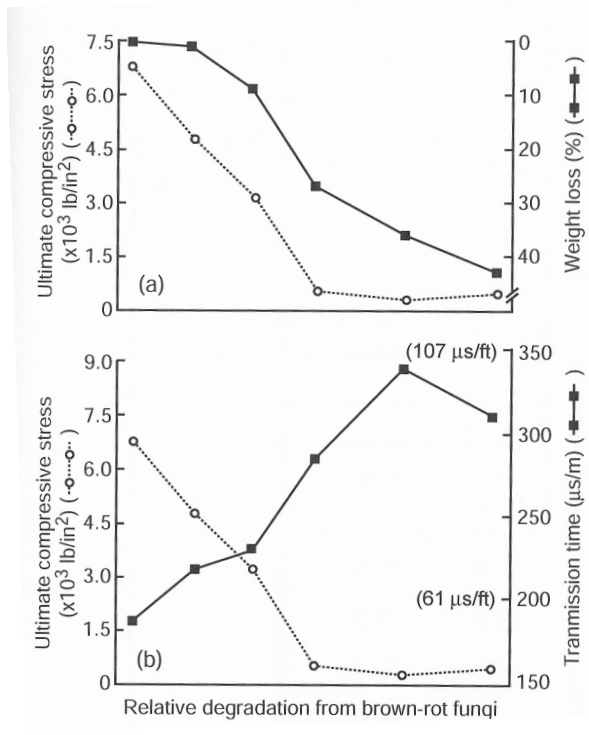

Figure 9.5 - *Relationship between stress wave transmission time and fungal degradation (Pellerin et al. 1985) (1 lb./in.² = 6.9 kPa).*

of 668 µs/m radially, 800 µs/m tangentially, and 995 µs/m at 45° to grain.

Effect of Decay

The presence of decay greatly affects stress wave transmission time in wood. **Table 9.3** summarizes stress wave transmission values obtained from field investigations of various wood members subjected to degradation from decay. Stress wave transmission times perpendicular to the grain are drastically increased when the member is degraded. Transmission times for nondegraded Douglas-fir are approximately 800 µs/m (244 µs/ft.), whereas severely degraded members exhibit values as high as 3,200 µs/m (975 µs/ft.) or greater.

stress wave transmission times implies a *50%* loss in strength. A 50% increase indicates severely decayed wood **(Fig. 9.5).** Transverse travel paths are best for finding decay Parallel to-grain travel paths can bypass regions of decay.

Weight loss is not a good indicator of decay because considerable strength loss can occur without significant weight loss.

Effect of Moisture Content

Considerable work has been completed to examine the effect that moisture in wood has on stress wave transmission time. Several studies have revealed that stress wave transmission times perpendicular to the grain of wood follow a relationship

Table 9.3—Summary of research on use of stress waves for detecting decay in timber structures.

Reference	Structure	Wood product	Test	Analysis
Volny (1992)	Bridge	Douglas-fir glulam, creosote pressure treated	Stress wave transmission time perpendicular to grain, across laminations at 0.3-m (0.98-ft.) intervals	Sound wood: 1,279 μs/m (390 μs/ft.) Moderate decay: 1,827 μs/m (557 μs/ft.) Severe decay: 2,430 μs/m (741 μs/ft.)
Ross (1982)	Football stadium	Solid-sawn Douglas-fir, creosote pressure treated	Stress wave transmission time perpendicular to grain, near connections	Sound wood: 853 μs/m (260 μs/ft.) Incipient decay: – Center of members: 1,276 μs/m (389 μs/ft.) – 38-mm-thick solid wood shell: 2,129 μs/m (649 μs/ft.) Severe decay: >3,280 μs/m (1,000 μs/ft.)
Hoyle and Pellerin (1978)	School gymnasium	Douglas-fir glulam arches	Velocity of stress wave transmission time perpendicular to grain, near end supports	Sound wood: 1,073 μs/m (327 μs/ft.) Decayed wood: 1,574 μs/m (480 μs/ft.)

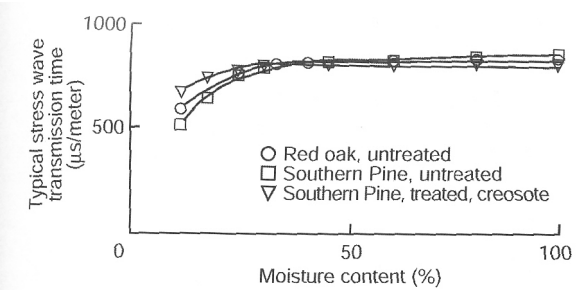

Figure 9.6 –*Transverse stress wave transmission times in Southern Pine and red oak piling.*

(Fig. 9.6). At moisture contents less than approximately 30%, transmission time decreases with decreasing moisture content. Corrections for various moisture content values are sumnnarized in **Table 9.4.**

Also, at moisture content values greater than approximately 30%, little or no change in transmission time occurs. Consequently, there is no need to adjust the measured values for wood that is tested in a wet condition.

Effect of Preservative Treatment

Treatment with waterborne salts has almost no effect on stress wave transmission time. Treatment with oilborne preservatives increases the transmission time by about 40% more than that of untreated wood. Round poles are usually penetrated to about 37 to 61 mm (1.5 to 2.5 in.), except at their ends where the treatment fully penetrates the wood. **Table 9.5** was calculated to show expected travel time for round poles treated with oilborne preservatives. Although these data illustrate the effect oilborne treatments have on transmission time, these values should not be used to estimate the level of penetration.

Table 9.4 - Stress wave transmission time adjustment factors for temperature at various moisture contents for Douglas-fir.

Moisture content (%)	Adjustment factors			
	–18°C (0°F)	–3°C (38°F)	27°C (80°F)	49°C (120°F)
1.8	0.94	0.95	0.97	0.98
3.9	0.95	0.96	0.98	0.99
7.2	0.93	0.98	1.00	1.01
12.8	0.97	0.99	1.00	1.01
16.5	0.99	1.01	1.03	1.05
23.7	1.05	1.07	1.09	1.14
27.2	1.07	1.10	1.12	1.17

Table 9.5 - Stress wave ttransmission times for round poles treated with oilborne preservatives.

Pole diameter (mm)	Stress wave transmission time (µs) for various levels of penetration		
	37 mm	61 mm	Full penetration
294	222	240	300
343	254	271	350
392	286	305	400
441	321	338	450
490	350	370	500
539	386	403	550
588	422	436	600

Interpretation of Stress Wave Velocity Readings

The guidelines in this chapter are useful in interpreting readings that are less than those for sound wood. Voids and checks will not transmit stress waves. Knots will act as parallel-to-grain wood but are usually oriented perpendicular to the long axis of timber.

Based on the direction and length of the stress wave path in the wood, moisture content of the wood, and whether or not preservative treatment is present, the velocity and travel time for sound wood can be determined. For the transverse direction, the annual ring orientation and the existence of seasoning checks should be recorded.

Measurement of Stress Wave Transmission Time

General Measurement

Several techniques can be used to measure stress wave transmission time in wood. The most common technique uses simple time-of-flight-type measurement systems. Two commercially available systems that use this technique are illustrated in **Figures 9.7 and 9.8.**

With these systems, a mechanical or ultrasonic impact is used to impart a wave into the member. Piezoelectric sensors are placed at two points on the member and used to detect passing of the wave. The time required for the wave to travel between sensors is then measured.

Commercial Equipment

The following types of commercial equipment are available to measure stress wave transmission times in wood. The manufacturer, method of operation, key considerations, and specifications for this equipment are also given.

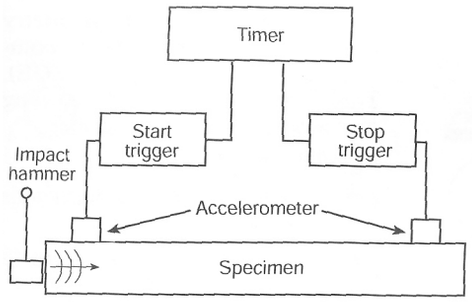

Figure 9.7 - *Technique used to measure impact-induced stress wave transmission times in various wood products.*

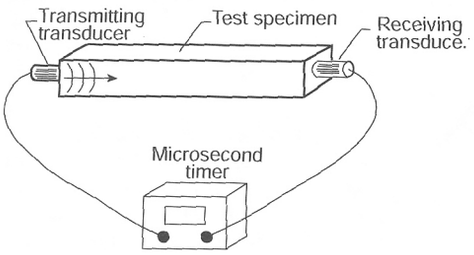

Figure 9.8 - *Ultrasonic measurement system used to measure stress wave transmission times in various wood products.*

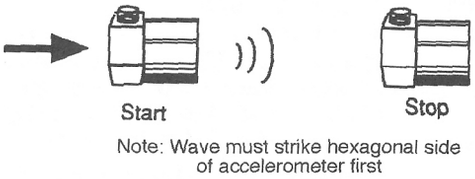

Figure 9.9 - *Necessary orientation of accelerometers.*

Manufacturer-Metriguard, Inc.; P.O. Box 399; Pullman, WA

fax (509) 332–0485; www.metriguard.com

Method of Operation - A mechanical stress wave is induced in a member by a hammer or other means and is detected with accelerometers at two points along the propagation path **(Fig. 9.7).** The timber starts when the wave front arrives at the first accelerometer. The timer stops when the wave front arrives at the second accelerometer and displays the propagation time between accelerometers in microseconds.

Key Considerations - It is imperative when using this equipment that the accelerometers are oriented as shown in **Figure 9.9.**

Specifications

Power requirements: 9-V battery

Resolution: ±1 µs

Dimensions: 23 by 15 by 20 cm (9 by 6 by 8 in.)

Weight: 2.3 kg (5.0 lb.) (including hammer and accelerometers)

A variety of testing techniques can be used to obtain values for velocity of stress wave transmission in wood members in the field. **Figure 9.10** illustrates important aspects of field test setups for several commonly used techniques.

Sylvatest Duo

Manufacturer - Concept Bois Technologie; 40 Rve de Jordils, CH-1025 Saint Sulpice, Switzerland; telephone +41-21-697-0850; fax +41-21-697-0852; www.cbs-cbt.com.

Method of Operation - The Sylva test unit utilizes an ultrasonic pulse generator to impart a stress wave into a member. Two transducers are placed a fixed distance apart on a member. A transmitting transducer imparts a wave into the member, and a receiving transmitter is triggered upon sensing the wave. The time it takes the wave to pass between the two transducers is then coupled with various additional information, such as wood

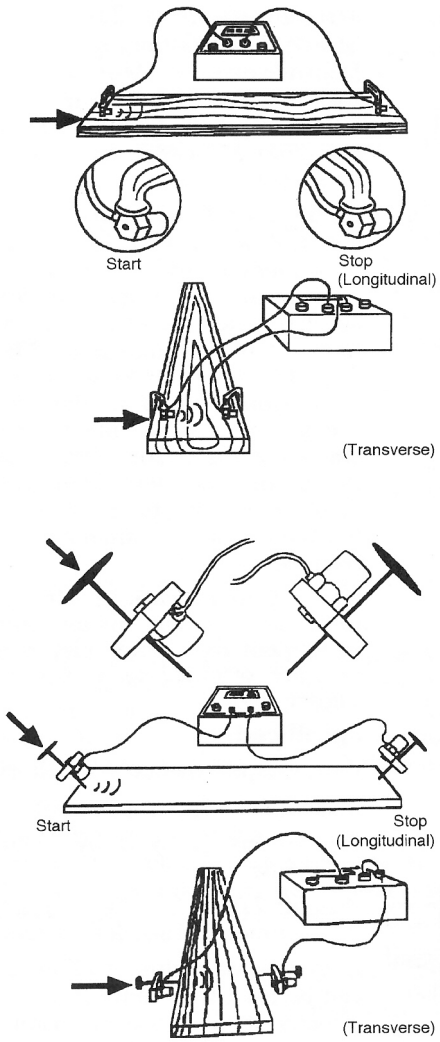

Figure 9.10 —*Important aspects of field set-ups for commonly used techniques.*

species, path length, and geometry (round or square section), to compute modulus of elasticity (MOE). This unit also measures damping characteristics of the member.

Specifications

Power requirements: rechargeable batteries

Dimensions: 20 by 10 by 4 cm (8 by 4 by 1.5 in.)

Weight: 1.6 kg (3.5 lb.) (instrument only) 56 N (12.6 lb.) (instrument with accessories)

Electronic Hammer

Manufacturer —IML, Inc.; 1950 Bassett Lakes Blvd., Suite 2212, Kennesaw, GA 30144; telephone: (888) 514–8851; fax: (770) 514–8351; www.imlusa.com.

Method of Operation —The electronic hammer is an instrument in which the time it takes a stress wave pulse to pass through a member is measured. It uses an impact to induce a wave to flow in the member.

Specifications

Power requirements: 7.2-V rechargeable battery

Weight: 4 kg (8.8 lb.)

James "V" Meter

Manufacturer —James Instruments, Inc.; 3727 North Kedzie Avenue; Chicago, IL 60618; telephone: (800) 426–6500 or (312) 463–6565;fax: (312) 463–0009.

Method of Operation—The James "V" Meter utilizes an ultrasonic pulse generator to impart a stress wave into the member. As illustrated in Figure 9.11, two transducers are placed a fixed distance apart on a member. As the transmitting transducer imparts a wave into a member, the timer unit begins timing passage of the wave. When the wave reaches the receiving unit, the timer stops and displays the transit time in microseconds.

Key Considerations—Coupling of the transducers is key to obtaining reliable results. The surface of the members should be free of debris, mud, or dirt. A coupling agent, provided by the manufacturer, is often used to facilitate the measurements.

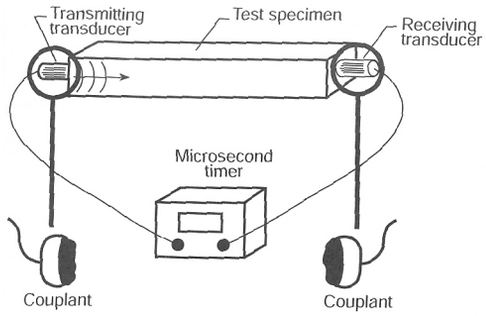

Figure 9.11 - *Ultrasonic measurement system used to measure stress wave transmission times in various wood products.*

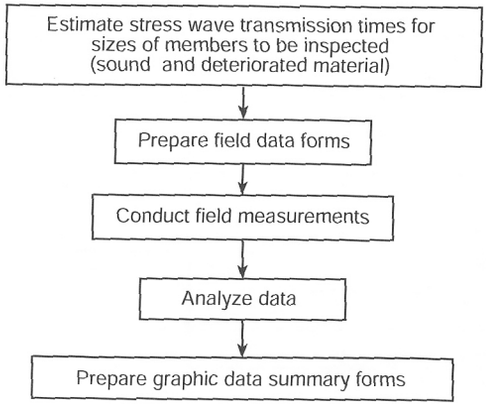

Figure 9.12 - *General procedures used to prepare and use stress wave timing methods for fieldwork.*

Specifications

Power requirements: rechargeable NI-CAD

Field Considerations and Use of Stress Wave Methods

Stress Wave Transmission Time

Figure 9.12 outlines the general procedures used with stress wave nondestructive evaluation methods for field work. Before venturing into the field, it is useful to estimate stress wave transmission time for the size of the members to be inspected. Preceding sections provided information on various factors that affect transmission time in wood. This information can be summarized, as a starting point, by simply using a baseline transmission time of 1,300 µs/m (400 µs/ft.). Transmission time, on a per length basis, less than this would indicate sound material. Conversely, transmission time greater than this value would indicate potentially degraded material. Using this value, you can estimate the transmission time for a member by knowing its thickness (path length) and the following formula:

$$T_{\text{baseline}}\ (\mu\text{s}) = 1{,}300 \times \text{WTD}$$

where T_{baseline} is baseline transmission time (µs), and WTD is wave transmission distance (path length) (m).

Page _____ of _____

Data Log—Stress Wave Transmission Times

Structure _____

Location _____ Date _____

_____ Equipment _____

_____ _____

_____ _____

Inspector _____

Member	Location	WTD	Equipment reading (µs)	Transmission time (µs/m) (µs/ft)	Condition	Grain orientation

Figure 9.13 —*Typical field data acquisition form.*

Field Measurements

Field use should be conducted in accordance with the instructions provided by equipment manufacturers. In the field, extra batteries, cables, and sensors are helpful. Testing should be conducted in areas of the member that are highly susceptible to degrading, especially in the vicinity of connections and bearing points.

The baseline values provided serve as a starting point in the inspection. It is important to conduct the test at several points at varying distances away

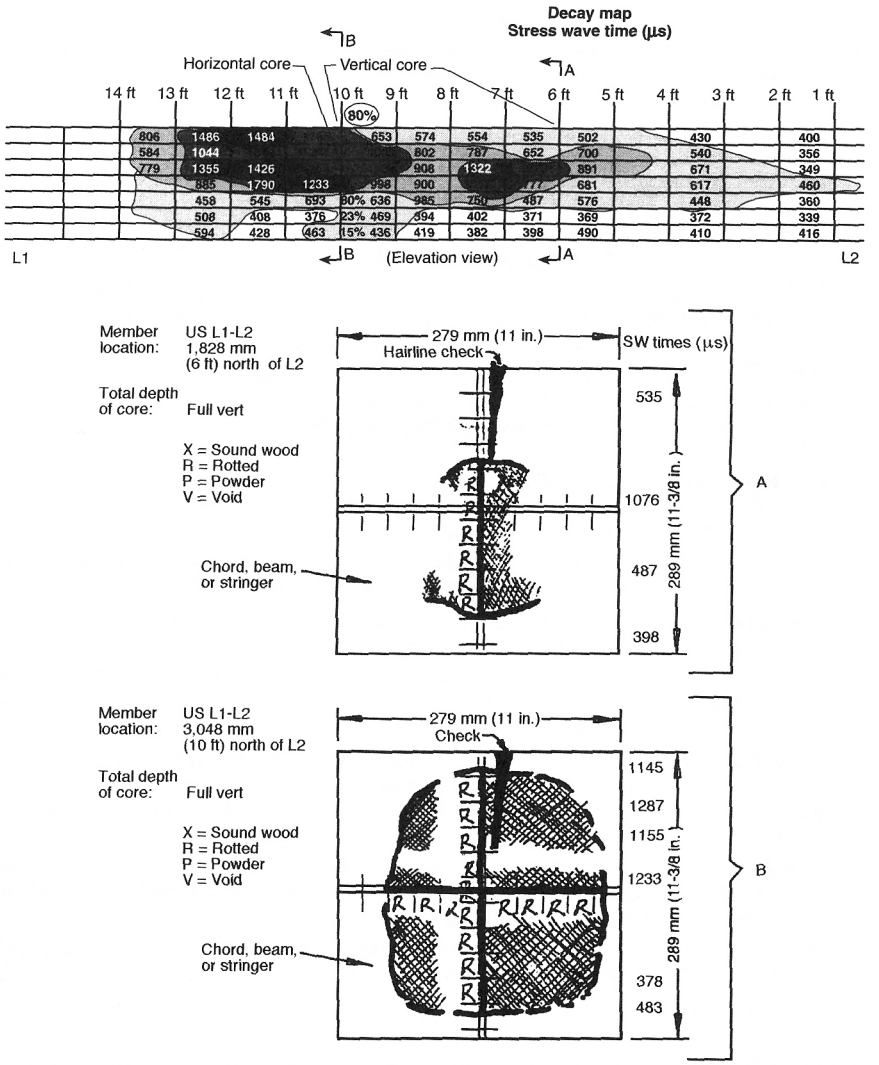

Figure 9.14 - *Examples of summary form (top) and data summary form (sections) (bottom).*

from the suspect area. In a sound member, little deviation is observed in transmission times. If a significant difference in values is observed, the member should be considered suspect.

Data Analysis and Summary Form

When data have been gathered, it is useful to present them in an easy to read manner. **Figure 9.14** illustrated various data summary forms. From these, the presence and extent of degradation can readily be seen.

References

Armstrong, J.P.; Patterson, D.W.; Sneckenberger, J.E. 1991. Comparison of three equations for predicting stress wave velocity as a function of grain angle. Wood and Fiber Science. 23(1): 32-43.

Elvery, R.H.; Nwokoye, D.N. 1970. Strength assessment of timber for glued laminated beams. In: Proceedings, Paper II, Nondestructive testing of concrete and timber, organized by the Institution of Civil Engineering and the British Commission for Nondestructive Testing; 1969 June 11–12. London, BC: Institute of Civil Engineering: 105–110.

Gerhards, C.C. 1978. Effect of earlywood and latewood on stress-wave measurements parallel to the grain. Wood Science. 11(2): 69–72.

Gerhards, C.C. 1980. Effect of cross grain on stress waves in lumber. Res. Pap. FPL–RP–368. Madison, WI: U.S. Department of Agriculture, Forest Service, Forest Products Laboratory.

Gerhards, C.C. 1982. Effect of knots on stress waves in lumber. Res. Pap. FPL–RP–384. Madison, WI: U.S. Department of Agriculture, Forest Service, Forest Products Laboratory.

Hoyle, R.J.; Pellerin, R.F. 1978. Stress wave inspection of a wood structure. In: Proceedings, 4th symposium on nondestructive testing of wood; 1978 August 28–30; Vancouver, WA. Pullman, WA Washington State University: 33-45.

Ihlseng, M.C. 1878. The modulus of elasticity in some American woods, as determined by vibration. Van Nostrand's Engineering Magazine. Vol. XIX: 8–9.

Ihlseng, M.C. 1879. On a mode of measuring the velocity of sound in wood. American Journal of Science. 3d Series. 17I(98): 125–133.

Jung, J. 1979. Stress wave grading techniques on veneer sheets. Gen. Tech. Rep. FPL–GTR–27. Madison, WI: U.S. Department of Agriculture, Forest Service, Forest Products Laboratory.

Pellerin, R.F.; De Groot, R.C.; Esenther, G.R. 1985. Nondestructive stress wave measurements of decay and termite attack in experimental wood units. In: Proceedings, 5th symposium on nondestructive testing of wood; 1985 September 9–11; Pullman, WA. Pullman, WA: Washington State University: 319–353.

Ross, R.J. 1982. Quality assessment of the wooden beams and columns of Bay C of the east end of Washington State University's football stadium. Unpublished research. Pullman, WA: Washington State University.

Ross, R.J.; Ward, J.C.; TenWolde, A. 1994. Stress wave nondestructive evaluation of wetwood. Forest Products Journal. 44(7/8): 79–83.

Rutherford, P.S. 1987. Nondestructive stress wave measurement of incipient decay in Douglas Fir. Pullman, WA: Washington State University. M.S. thesis.

Smulski, S.J. 1991. Relationship of stress wave and static bending determined properties of four northeastern hardwoods. Wood and Fiber Science. 23(1): 44–57.

Soltis, L; Baker. A.; Ferge, L.; [*et al.*]. 1992. USS Constitution—inspection and evaluation procedures for live and white oak members. Report submitted to U.S. Navy, Maintenance and Repair, USS Constitution, Boston Naval Shipyard, Charlestown, MA.

Volny, N.J. 1992. Timber bridge inspection case studies in use of stress wave velocity equipment. In: Proceedings, 8th symposium on nondestructive testing of wood 1991 September 23–25; Vancouver, WA. Pullman, WA: Washington State University.

Nondestructive Evaluation of Wood

Compiled and Edited by
Roy F. Pellerin and
Robert J. Ross

Forest Products Society
Madison, WI

Cover photos courtesy of Donald W. Neal, P.E., Neal Engineering Associates, Beaverton, OR; USDA Forest Service, Forest Products Laboratory, Madison WI; Washington State University, Pullman WA; and USDA Forest Service, Forest Products Laboratory Madison, WI.

The opinions expressed are those of the authors and do not necessarily represent those of the Forest Products Society.

Copyright © 2002 by the Forest Products Society.

ISBN 1-892529-26-2

Publication No. 7250

All rights reserved. No part of this publication may be reproduced, stored in a retrieval system, or transmitted, in any form or by any means, electronic, mechanical., photocopying, recording, or otherwise, without the written prior permission of the copyright owner. Individual readers and nonprofit libraries are permitted to make fair use of this material such as to copy an article for use in teaching or research. To reproduce single or multiple copies of figures, tables, excerpts, or entire articles requires permission from the Forest Products Society and may require permission from one of the original authors.

Printed in the United States of America.

0209500