Chapter 1– Characteristics of Wood, Fundamental Hypothesis, and Static Bending Nondestructive Evaluation Methods

Roy F. Pellerin
Professor Emeritus
Washington State University, Pullman, Washington

Robert J. Ross
Project Leader
Forest Products Laboratory, Madison, Wisconsin

Important Characteristics of Wood

Solid-sawn sections of wood can be characterized as a nonhomogeneous material with anisotropic properties and a high degree of variability. Features of wood that bring about its variable nature and anisotropic properties can be explained by envisioning the cross section of a tree (**Fig. 1.1**). Starting at the center (or pith), the tree grows outward, adding a growth ring each year. This growth ring usually consists of two tpyes of tissue: earlywood, formed in the period of fast growth, and latewood, formed in the period of slow growth.

These two types of tissue, which have different densities and properties, are one source of variability in the tree. The ratio of earlywood to latewood depends upon species and environment but commonly varies from one growth ring to the next. Further variability results from fiber alignment and the presence of knows, the bases of the branches within the stem (**Fig. 1.2**). In the conversion of the tree to lumber, fiber alignment and knows become a serious source of weakness for structural products.

The basic structural element of wood, the fiber, is generally aligned longitudinally within the tree stem and determines the direction of its grain. In this type of natural composite we may expect the longitudinal compressive and tensile strength to be high, the transverse values to be lower; and shear between bundles of fibers to be a plane of relative weakness. Tree growth and product-

cutting practice, as that for lumber, do not always produce grain parallel to the long dimension. The result, known as cross grain, produces a plane of weakness in the product (**Fig. 1.3**).

An individual wood fiber is, by itself, a complex structural element. The model shown in **Figure 1.4** represents the multi-layered structure of a typical woody plant fiber. It consists of a thin primary wall encapsulating a secondary wall structure composed of three distinct layers (S1, S2, S3).

Figure 1.1-*Cross section of a tree.*

The chemical composition of the cell primarily consists of three polymeric materials: cellulose, hemicellulose, and lignin. Cellulose exists in the cell layers in crystalline threadlike structures called microfibrils, which are embedded in an amorphous matrix of lignin and hemicellulose. The physical and mechanical properties of the fiber are directly related to the orientation (θ) of the microfibrils with respect to its longitudinal axis. Their orientation varies with the individual layers.

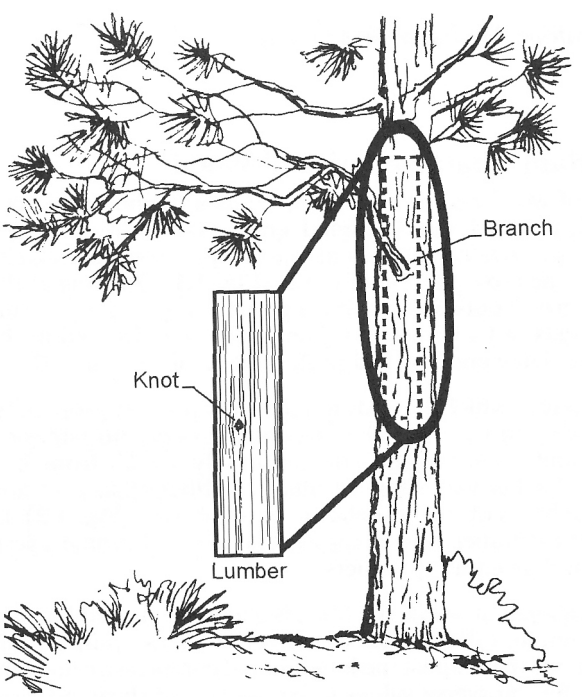

Figure 1.2 - *Knots, a source of variability in lumber form at the bases of branches.*

Temperature and moisture also affect the performance of wood and wood products. Whereas temperature in the range of common use of wood products has little or no effect on performance, the moisture content of wood has a significant influence on the engineering properties. In general, engineering properties of wood vary inversely with moisture content. For example, engineering properties increase with decreasing moisture content and decrease with increasing moisture content.

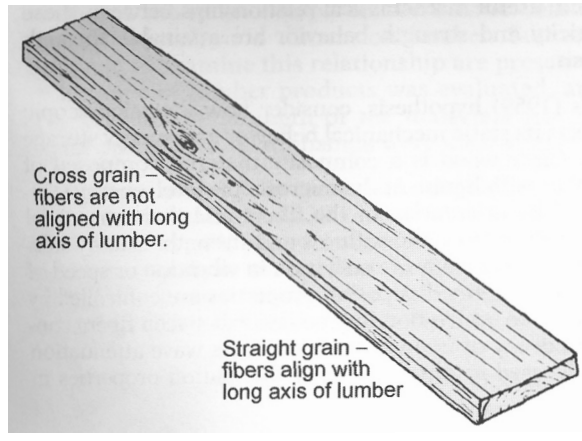

Figure 1.3 —*Crossand straight grain in lumber.*

Fundamental Hypothesis for NDE of Wood-Based Material Properties

Nondestructive evaluation (NDE) technologies for wood-based materials, which are natural composites, differ greatly from those for homogeneous, isotropic materials such as metals, plastics, and ceramics. In such non-wood-based materials, whose mechanical properties are known and tightly controlled by manufacturing processes, NDE technologies are used to detect the presence of discontinuities, voids, or inclusions. However, in wood, these irregularities occur naturally and may be further induced by degradative agents in the environment. Therefore, NDE technologies for wood are used to determine how naturally and environmentally induced irregularities interact in a wood member to determine its performance characteristics.

This concept led researchers to vigorously examine several NDE techniques for grading structural lumber and evaluating the quality of laminated materials. These efforts resulted in a hypothesis based on fundamental material properties for establishing relationships between measurable NDE parameters and static mechanical properties being firmly established. Out of this hypothesis evolved machine stress rating (MSR) of lumber, a grading method that is now used extensively for structural lumber.

A fundamental hypothesis for NDE of wood-based materials was initiated by Jayne (1959). He proposed that energy storage and dissipation properties of wood-based materials, which can be measured by using a number of techniques, are controlled by the same mechanisms that determine static behavior of such

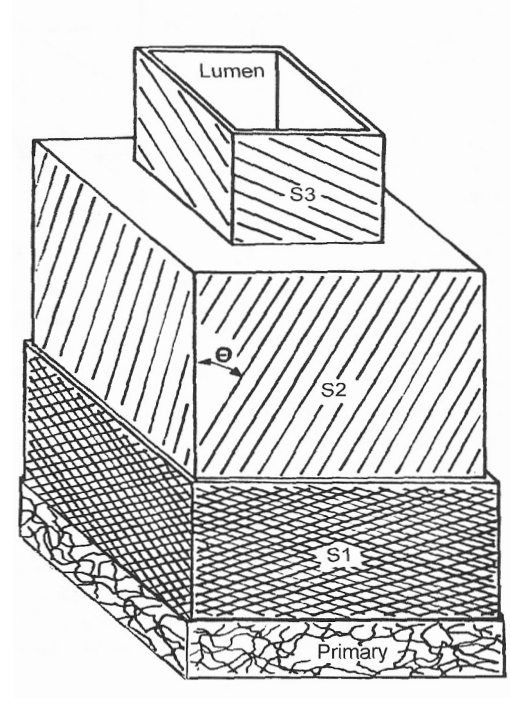

Figure 1.4-*Multi-layered structure of typical woody plant fiber.*

materials. As a consequence, useful mathematical relationships between these properties and static elasticity and strength behavior are attainable through statistical regression analysis.

To elaborate on Jayne's (1959) hypothesis, consider how the microscopic structure of clear wood affects its static mechanical behavior and energy storage and dissipation properties. Clear wood is a composite material composed of many fibers cemented together with lignin. At the microscopic level, energy storage properties are controlled by orientation of the fibers and their structural composition, factors that contribute to static stiffness and strength. Energy storage properties are observable as frequency of oscillation in vibration or speed of sound transmission. Conversely, energy dissipation properties are controlled by internal friction characteristics, to which bonding behavior between fibers contributes significantly. Rate of decay of free vibration or stress wave attenuation measurements are frequently used to observe energy dissipation properties in wood-based materials.

Statistical regression analysis methods are used to establish mathematical relationships between nondestructive test parameters and performance characteristics. As shown in **Figure 1.5,** the closer the data are grouped around the regression line and the lower the variability, the more successful a nondestructive test parameter is at predicting performance. In the literature, most researchers reported on the quality of a relationship by reporting correlation coefficients *r*. Correlation coefficients can range from -1 to 1. A correlation coefficient nearing 1, whether it be negative or positive, suggests a strong relationship, and a coefficient near 0.7 indicates a useful relationship. A correlation coefficient of zero indicates that no relationship exists.

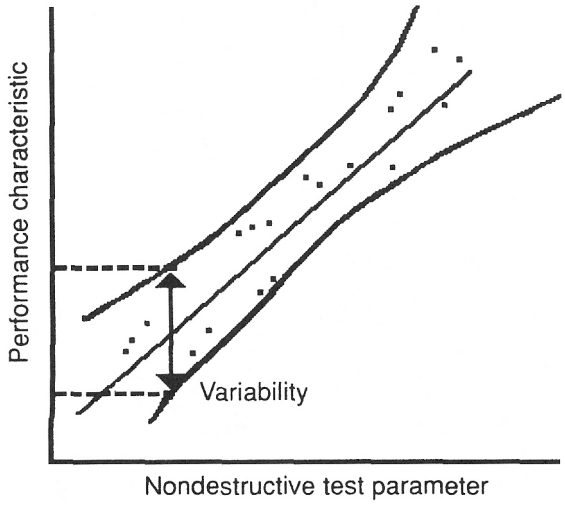

Figure 1.5 - *Prediction of performance by nondestructive evaluation. Close grouping of data around regression line and low variability indicate that the NDE parameter can closely predict performance.*

Static Bending NDE Methods

Mesauring the modulus of elasticity (MOE) of a member by static bending methods is a relatively simple procedure that involves utilizing the load-deflection relationship of a simply supported beam. Modulus of elasticity can be computed directly by using equations derived from fundamental mechanics of materials.

Initial laboratory studies to verify the relationships between static bending methods and structural performance characteristics were conducted with lumber products. Considerable research in the early 1960s

examined the relationships between static bending test methods and the strength of softwood dimension lumber. Summaries of various projects designed to examine this relationship are presented in **Tables 1.1 to 1.3.** A wide range of lumber products was evaluated, and the bending, compressive, and tensile strength of the materials was investigated. In all cases, useful correlative relationships were discovered.

Some commercially available equipment utilizes static bending techniques to evaluate the MOE of structural lumber. For example, Metriguard, Inc. (Pullman, WA) manufactures and sells a range of products that utilize bending techniques to evaluate the flexural properties of structural lumber (**Table 1.4**). A more detailed discussion of their high-speed production equipment is included in the Chapter 7, Mechanical Grading of Lumber.

Essential Laboratory Testing Procedures and Key Information

The following test outlines essential laboratory testing procedures and additional key information to be used in a laboratory or field environment.

Centerpoint Loading Test Setup

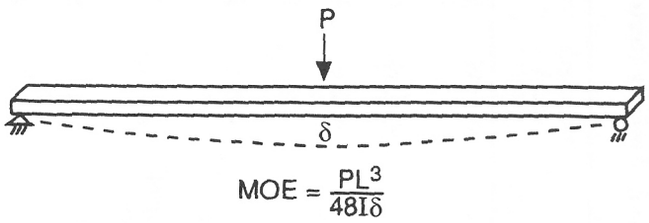

Figure 1.6 illustrates a typical centerpoint loading test setup. The specimen is simply supported at both ends, a load applied, and the midspan deflection that results from the load measured. MOE of the specimen is calculated as

$$\text{MOE} = \frac{PL^3}{48I\delta}$$

where:

P = applied load (lb.),

L = span (in.),

I = moment of inertia (in.^{4}), and

δ = midspan deflection (in.).

Alternative Bending Test Setup

Figure 1.7 shows an alternative bending test setup. The only difference between this setup and a centerpoint setup is that equal loads are applied at a known distance from each end. MOE of a specimen is calculated using

$$\text{MOE} = \frac{Pa(3L^2 - 4a^2)}{48I\delta}$$

Table 1.1—Research on the correlation between modulus of elasticity (tested flatwise) and flatwise bending strength of softwood dimension lumber.

Reference	Species	Nominal moisture content (%)	Grade[a]	Nominal width (in.)[b]	Growth location	Correlation coefficient *r*
Hoyle (1961)	Douglas-fir	12	SS, C, U	4, 6, 10	Western Oregon, Washington, Idaho, Washington	0.79 0.72
	Western hemlock	12	SS, C, U	4, 6, 10	Western Oregon, Washington	0.74
	Western larch	12	SS, C, U	4, 6, 8	Idaho, Washington	0.70
Hoyle (1962)	Grand fir	12	C, S, U	8	Idaho	0.72
Hofstrand and Howe (1963)	Grand fir	12	C, S	4, 6, 8	Idaho	0.75
Pellerin (1963b)	Douglas-fir	12	Combination of visual grades	4, 8	Idaho	0.76
Hoyle (1964)	Southern Pine	12	1D, 1, 2D, 2, 3	4, 6, 8	Southeastern United States	0.76
Kramer (1964)	Southern Pine	12	1D, 2, 3	4 ,6, 10	Southeastern United States	0.88
Johnson (1965)	Douglas-fir	10	SS, C, U	6	Western Oregon, Washington	0.85
	Western hemlock	10	SS, C, U	6	Western Oregon, Washington	0.86

[a] Grades are by regional rules in use at time of research. Western Products Association and West Coast Lumber Inspection Bureau Grades: SS, Select Structural; C, Construction; S, Standard; U, Utility. Western Wood Products Association grades: 1, 2, 3. Southern Pine Inspection Bureau Grades: 1D, No. 1 Dense; 1, No. 1; 2D, No. 2 Dense; 2, No. 2; 3, No. 3.

[b] 1 in. = 25.4 mm.

Table 1.2—Research on the correlation between modulus of elasticity (tested flatwise and on edge) and edgewise bending strength of softwood dimension lumber.

Reference	Species	Nominal moisture content (%)	Grade[a]	Nominal width (in.)[b]	Growth location	Correlation coefficient *r*
Hoerber (1962)	Douglas-fir	12	SS, C, U	4, 6, 8	Idaho, eastern Washington	0.65
Hoyle (1962)	Grand fir	12	C, S, U, SS	8	Idaho	0.59–0.70
Hoyle (1964)	Southern Pine	12	1D, 1, 2D, 2, 3	4, 6, 8	Southeastern United States	0.57
Sunley and Hudson (1964)	Norway spruce and Scots pine (pooled)	—	—	4, 7	Great Britain	0.68
Corder (1965)	Douglas-fir	12	SS, C, S	4, 6, 10	Inland northwestern United States	0.64
Johnson (1965)	Douglas-fir	10	SS, C, U	6	Western Oregon, Washington	0.80–0.87
	Western hemlock	10	SS, C, U	6		0.84
Littleford (1965)	Douglas-fir	10	—	6	British Columbia, Canada	0.74
	Western hemlock	12	—	6		0.70–0.77
	Noble fir	12	—	6		0.66
	Western white spruce	12	—	6		0.79
	Lodgepole pine	17	—	6		0.80
Miller (1965)	White spruce	12	—	6	Eastern Canada	0.78–0.84
	Jack pine	12	—	6		0.69–0.73
Doyle and Markwardt (1966)	Southern Pine	12	1D, 1, 2D, 2, 3	4, 6, 8, 10	Southeastern United States	0.66
Hoyle (1968)	Southern Pine	12	1D, 1, 2D, 2, 3	4, 6, 8	Southeastern United States	0.67

[a] Grades are by regional rules in use at time of research. Western Products Association and West Coast Lumber Inspection Bureau Grades: SS, Select Structural; C, Construction; S, Standard; U, Utility. Western Wood Products Association grades: 1, 2, 3. Southern Pine Inspection Bureau Grades: lD, No. 1 Dense; 1, No. 1; 2D, No. 2 Dense; 2, No. 2; 3, No. 3.

[b] 1 in. = 25.4 mm.

Table 1.3—Research on the correlation between modulus of elasticity (tested flatwise) and the compressive and tensile strength of softwood dimension lumber.

Strength property	Reference	Species	Nominal moisture content (%)	Grade[a]	Nominal width (in.)[b]	Growth location	Correlation coefficient *r*
Compressive	Hofstrand and Howe (1963)	Grand fir	12	Ungraded	4, 8	Idaho	0.84
	Pellerin (1963a)	Douglas-fir	12	SS, S, E	4, 8	Idaho	0.78
	Hoyle (1968)	Southern Pine	12	1, 2, 3	4, 8	Southeastern United States	0.67
Tensile	Hoyle (1968)	Douglas-fir	13	1.0, 1.4, 1.8, 2.2	4, 8	Idaho	0.74
		White fir	14			Idaho	0.75
		Western hemlock	15			Western Oregon, Washington	0.81

[a] Grades are by regional rules in use at time of research. Western Products Association and West Coast Lumber Inspection Bureau Grades: SS, Select Structural; S, Standard; E, Economy. Western Wood Products Association grades: 1, 2, 3. Machine Stress Grades: 1.0, 1.4, 1.8, 2.2.
[b] 1 in. = 25.4 mm.

Table 1.4 - Products that utilize bending techniques to evaluate flexural properties of structural lumber.

Equipment manufacturer	Description of equipment
Metriguard, Inc. P.O. Box 399 Pullman, WA 99163 USA Telephone: (509)332-7526 Fax: (509) 332-0485 E-mail: sales@metriguard.com	Model 440 Static Bending Tester-Determines flatwise bending modulus of elasticity Model 312 Bending Proof Tester - Measures edgewise bending modulus of elasticity and provides a proof test for bending modulus of rupture Model 7100 CLT Continuous Lumber Tester - Measures flatwise bending modulus of elasticity of dimension lumber at production line speeds Model 7200 LS Lumber Tester - Measures flatwise bending modulus of elasticity at production line speeds

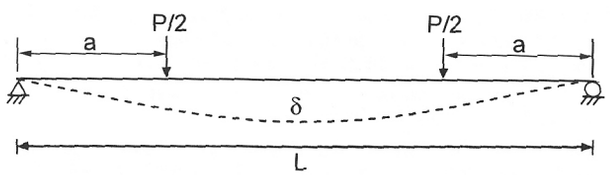

$$MOE = \frac{Pa(3L^2 - 4a^2)}{48I\delta}$$

Figure 1.7 - *Alternative bending test setup.*

For both test setups, significant attention must be placed on design of the end supports. Ideally, the supports should be rigid so that no vertical displacement of the supports occurs. In addition, horizontal movement of the specimen on the end support should not be restricted, and the end supports need to be rotated and fixed to accommodate twist in the specimen.

References

Bell, E.R.; Peck, E.C.; Krueger, N.T. 1950. Young's modulus of wood determined by a dynamic method. Rep. 1775. Madison, WI: U.S. Department of Agriculture, Forest Service, Forest Products Laboratory.

Corder, S.E. 1965. Localized deflection related to bending strength of lumber. In: Proceedings, 2nd nondestructive testing of wood symposium; 1965 April; Spokane, WA. Pullman, WA Washington State University: 461–472.

Doyle, D.V.; Markwardt, L.J. 1966. Properties of Southern Pine in relation to strength grading of dimension lumber. Res. Pap. FPL–RP–64. Madison, WI: U.S. Department of Agriculture, Forest Service, Forest Products Laboratory.

Galiginaitis, S.V.; Bell, E.R.; Fine, A.M. [*et al*]. 1954. Nondestructive testing of wood laminates. Final report. Louisville, KY: Office of Naval Research, Institute of Industrial Research, University of Louisville.

Hoerber, G.F. 1962. A study of modulus of elasticity and modulus of rupture in Douglas-fir dimension lumber. Lewiston, ID: Potlatch Forests, Inc.

Hofstrand, A.D.; Howe, J.P. 1963. Relationship between modulus of elasticity and compression strength of white fir. Lewiston, ID: Potlatch Forests, Inc.

Hoyle, R.J. 1961. A nondestructive test for stiffness of structural lumber. Forest Products Journal. 11(6): 251–254.

Hoyle, R.J. 1962. Analysis of relationship between stiffness and strength of 2" × 8" white fir (*Abies Grandis*) used as joist and plank. Lewiston, ID: Potlatch Forests, Inc.

Hoyle, R.J. 1964. Research results on machine stress rated Southern Pine lumber. Lewiston, ID: Potlatch Forests, Inc.

Hoyle, R.J. 1968. Background to machine stress rating. Forest Products Journal. 18(4): 87–97.

James, W.L. 1959. A method for rapid measurement of the rate of decay of free vibrations. Bull. 2154. Madison, WI: U.S. Department of Agriculture, Forest Service, Forest Products Laboratory.

Jayne, B.A. 1955. A nondestructive test of glue bond quality. Forest Products Journal. 5(5): 294–301.

Jayne, B.A. 1959. Vibrational properties of wood as indices of quality. Forest Products Journal. 9(11): 413–416.

Johnson, J.W. 1965. Relationships among moduli of elasticity and rupture. In: Proceedings, 2nd nondestructive testing of wood symposium; 1965 April; Spokane, WA. Pullman, WA Washington State University: 419-457.

Kramer, P.R. 1964. Correlation of bending strength and stiffness of Southern Pine. Forest Products Journal. 14(10):495-496.

Littleford, T.W. 1965. Mechanical stress rating of western Canadian species. In: Proceedings, 2nd nondestructive testing of wood symposium; 1965 April; Spokane, WA. Pullman, WA: Washington State University: 475-485.

McKean, H.B.; Hoyle, R.J. 1962. Stress grading method for dimension lumber. Special Tech. Pub. 353. Philadelphia, PA: American Society for Testing Materials.

Miller, D.G. [Comments on Littleford (1965)]. In: Proceedings, 2nd nondestructive testing of wood symposium; 1965 April; Spokane, WA. Pullman, WA: Washington State University: 485-491.

Pellerin, R.F. 1963a. Compression parallel to grain versus modulus of elasticity for Douglas-fir dimension lumber. Washington State University, Division of Industrial Research. Lewiston, ID: Potlatch Forests, Inc.

Pellerin, R.F. 1963b. Correlation of strength properties of 1-inch lumber. Washington State University, Division of Industrial Research. Lewiston, ID: Potlatch Forests, Inc.

Senft, J.F.; Suddarth, S.K.; Angleton, H.D. 1962. A new approach to stress grading of lumber. Forest Products Journal. 12(4):183–186.

Sunley, J.G.; Hudson, W.M. 1964. Machine-grading lumber in Britain. Forest Products Journal. 14(4): 155–158.

Nondestructive Evaluation of Wood

Compiled and Edited by
Roy F. Pellerin and
Robert J. Ross

Forest Products Society
Madison, WI

Cover photos courtesy of Donald W. Neal, P.E., Neal Engineering Associates, Beaverton, OR; USDA Forest Service, Forest Products Laboratory, Madison WI; Washington State University, Pullman WA; and USDA Forest Service, Forest Products Laboratory Madison, WI.

The opinions expressed are those of the authors and do not necessarily represent those of the Forest Products Society.

Copyright © 2002 by the Forest Products Society.

ISBN 1-892529-26-2

Publication No. 7250

All rights reserved. No part of this publication may be reproduced, stored in a retrieval system, or transmitted, in any form or by any means, electronic, mechanical., photocopying, recording, or otherwise, without the written prior permission of the copyright owner. Individual readers and nonprofit libraries are permitted to make fair use of this material such as to copy an article for use in teaching or research. To reproduce single or multiple copies of figures, tables, excerpts, or entire articles requires permission from the Forest Products Society and may require permission from one of the original authors.

Printed in the United States of America.

0209500