NONDESTRUCTIVE EVALUATION OF HONEYCOMB AND SURFACE CHECKS IN RED OAK LUMBER

JAMES J. FULLER
ROBERT J. ROSS
JOHN R. DRAMM

ABSTRACT

Honeycomb and closed surface checks are types of lumber drying defects that can go undetected and result in considerable losses during further processing of the lumber into high-quality products. This paper summarizes the results of an experiment that investigated the use of ultrasonic nondestructive evaluation (NDE) techniques to detect honeycomb and surface checks in red oak lumber. Dried 1-1/4-inch- (30-mm-) thick red oak specimens were analyzed using ultrasonic through transmission NDE. A strong relationship was observed between the occurrence of honeycomb and surface checks and excessively long sound transmission times. Hence, this technique shows strong promise to detect honeycomb and surface checks in lumber.

Lumber drying is a critical step in manufacturing hardwood lumber, especially when considering opportunities to improve recovery and reduce both degrade and unnecessary expense. Degrade in the form of surface checks and honeycomb is especially severe in oak lumber and a major source of value loss and waste. Such drying defects are caused by internal stresses that develop from differential shrinkage patterns within pieces of lumber. Preventing drying defects requires close control of the movement of moisture through and out of the lumber. More specifically, maintaining proper limits on temperature and humidity in lumber dry kilns is necessary.

To minimize loss and excessive secondary manufacturing costs, it is important to minimize degrade during drying. When drying degrade exists, a strategy of inspection may be useful to identify and remove lumber containing drying degrade before additional processing costs are incurred. Of particular interest are honeycomb and closed surface checks. These defects are hidden yet result in significant downgrade. For example, it would be advantageous to detect end-related honeycomb in a rough mill. X-ray nondestructive evaluation techniques have been shown to be useful for identifying defects.[1] However, cost constraints limit the use of these x-ray techniques.

Ultrasonic NDE techniques may provide a necessary tool to aid in the lumber inspection process. These techniques have been researched and are used extensively to grade wood veneer and inspect wood structures[2] The underlying premise for ultrasonic NDE is that speed-of-sound transmission is sensitive to various factors that determine the quality of wood products. For example, recent research results showed that ultrasonic NDE techniques are sensitive to the presence of wetwood in undried oak lumber.[3,4] However, use of these techniques to detect honeycomb and surface checks in dried lumber has not been investigated. We hypothesized that the presence of honeycomb and surface checks would significantly increase sound transmission time in red oak lumber.

The objective of this study was to determine if speed-of-sound transmission perpendicular to the grain is sensitive to the presence of honeycomb and closed surface checks in red oak lumber.

MATERIALS AND METHODS

Eighteen kiln-dried, 1-1/4-inch- (30-mm-) thick red oak lumber specimens were obtained from the Webster Lumber

[1] Vick, C. 1970. X-ray used in drying studies to detect honeycomb. Forest Prod. J. 20(3):52-53.

[2] Ross, R.J. and R.F. Pellerin. 1994. Nondestructive testing for assessing wood members in structures: a review. Gen. Tech. Rept. FPL-GTR-70. USDA Forest Serv., Forest Prod. Lab., Madison, Wis. 40 pp.

[3] Verkasalo, E., R.J. Ross, A. TenWolde, and R.L. Youngs. 1993. Properties related to drying defects in red oak wetwood. Res. Pap. FPL-RP-516. USDA Forest Serv., Forest Prod. Lab., Madison, Wis. 10 pp.

[4] Ross, R.J., J.C. Ward, and A. TenWolde. 1992. Identifying bacterially infected oak by stress wave nondestructive evaluation. Res. Pap. FPL-RP-512. USDA Forest Serv., Forest Prod. Lab., Madison, Wis. 6 pp.

The authors are, respectively, Research Forest Products Technologist, Supervisory General Engineer, and Forest Products Technologist, Forest Prod. Lab., One Gifford Pinchot Dr., Madison, WI 53705-2398. We thank Webster Industries, Wayzata, Minn., for technical assistance, materials, and facilities to conduct this study at their plant in Bangor, Wis. This paper was received for publication in March 1995.
Forest Products Society 1995.
Forest Prod. J. 45(5):42-44.

TABLE 1. — Width of specimens

Board width (in.)[a]	Total no. of specimens
6.0	4
7.0	10
8.0	1
8.5	2
9.0	1

[a] 1 inch = 0.0254 m.

Co., Bangor, Wis. Special care was taken in the selection of the specimens to ensure that some contained honeycomb and surface checks. Specimens were selected by mill personnel based on visual criteria. The width of the specimens varied **(Table 1).**

Speed-of-sound transmission across the width of the specimens was measured using the experimental setup shown in **Figure 1.** The setup consisted of two 84-kHz rolling transducers coupled to an ultrasonic transmitter and receiving unit. 'Transmission times were displayed by the unit and recorded manually. Transmission times were measured at regular increments along the length of the specimens. Transit cutoff times of 250 and 300 µsec./ft. (820 and 984 µsec./m) were chosen based on results reported by Armstrong and others[5] They measured sound transmission time perpendicular to the grain for a variety of hardwoods and reported values that ranged from 197 to 174 µsec./ft. (646 to 570 µsec./m) for clear red oak containing no defects. Armstrong and others[5] used a relatively small sample size. To account for natural variability, we chose a low cutoff value of 250 µsec./ft. (820 µsec./m). We chose an upper cutoff of 300 µsec./ft. (984 µsec./m) because most clear materials would fall below this level.

After sound transmission times were recorded, 1/4-inch (6-mm) cross sections were removed from the specimens at each point where the NDE tests were performed. These cross sections were then visually inspected to determine if honeycomb and surface checks were present.

RESULTS AND DISCUSSION

A summary of sound transmission times, computed on a per foot (meter)

[5] Armstrong, J.P., D.W. Patterson, and J.E. Sneckenberger. 1991. Comparison of three equations for predicting stress wave velocity as a function of grain angle. Wood and Fiber Sci. 23(1):32-43.

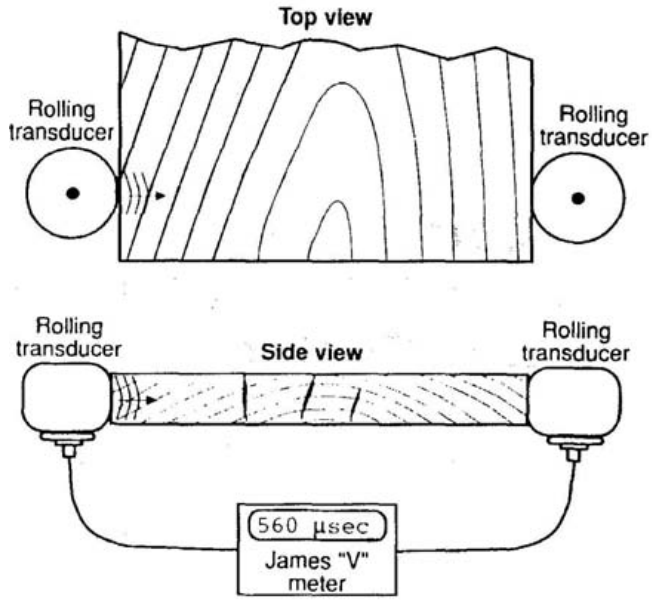

Figure 1.—Test setup.

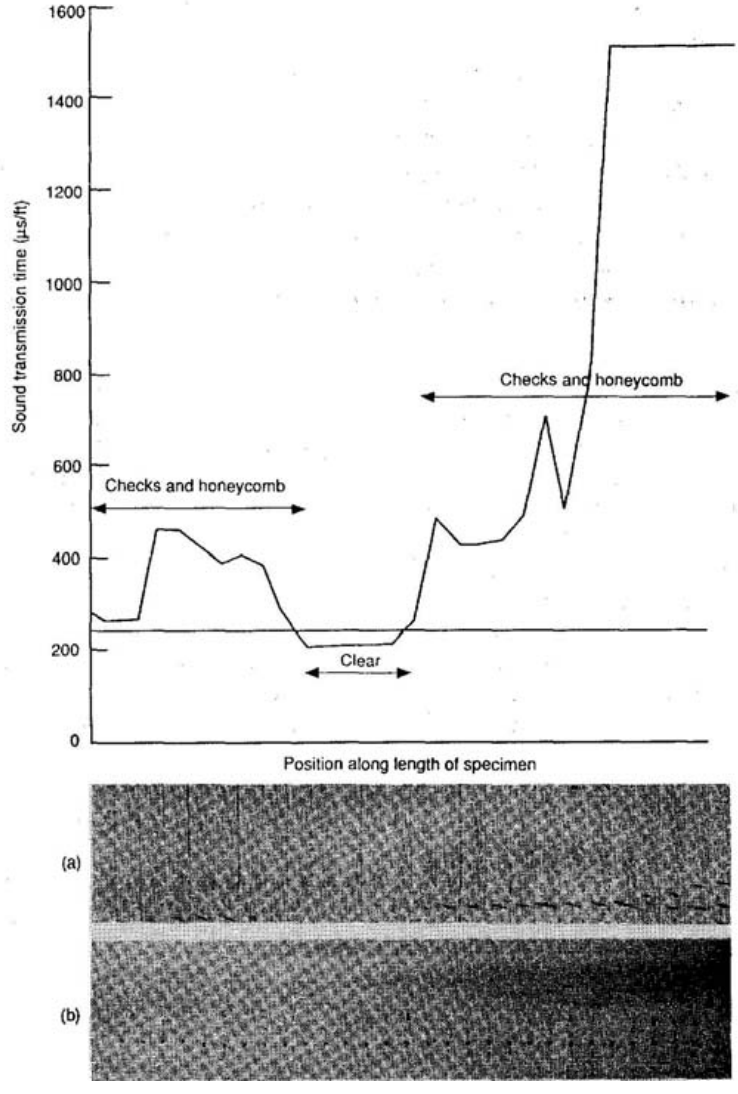

Figure 2.- Sound transmission time as a function of position; specimen showing (a) internal and (b) surface characteristics.

TABLE 2. — Data summary comparing sound transmission times and the presence of honeycomb or surface checks.

Sound transmission time (µsec./ft.) (µsec./m)	Number of cross sections: Containing honeycomb/surface checks	Free of honeycomb/surface checks	total tested
< 250 (< 820)	7 (3.5)[a]	192 (96.5)	199 (100)
250 io 300 (820 to 984)	27 (31.8)	58 (68.2)	85 (l00)
> 300 (> 984)	247 (98.0)	5 (2.0)	252(100)

[a] Values in parentheses are the percentage of cross sections.

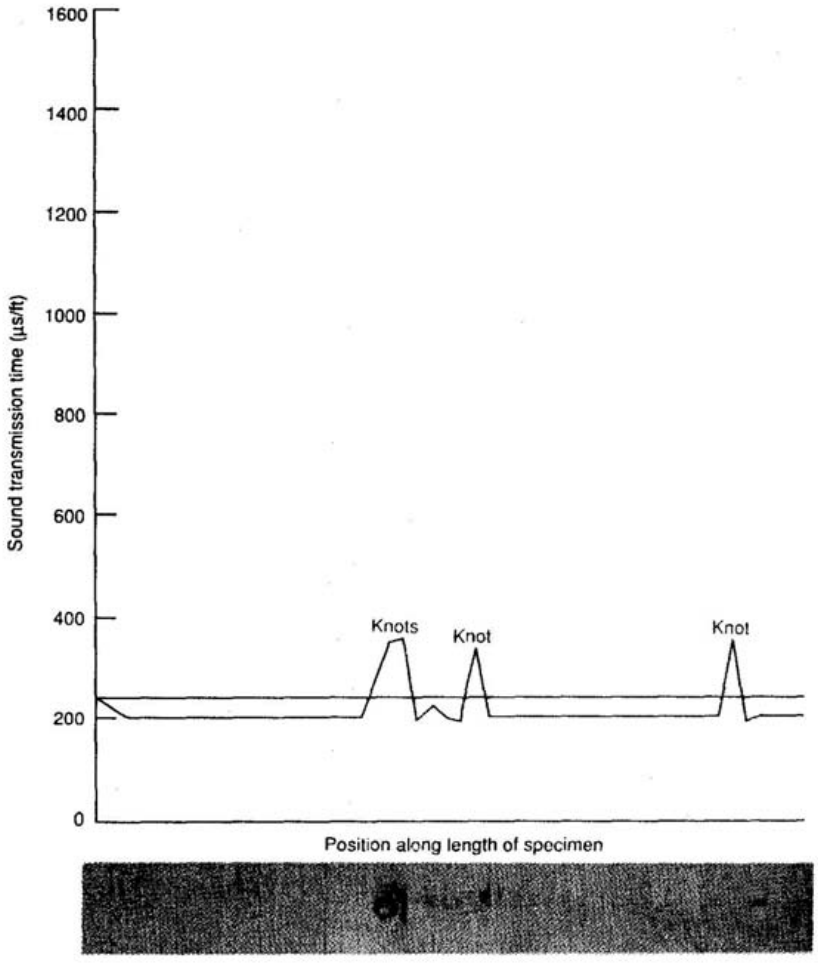

Figure 3 - Sound transmission time as a function of position; specimen contains no honeycomb or surface checks but does contain several knots.

basis, and results of visual inspection of the corresponding cross sections for all specimens are listed in **Table 2.** Note that 98 percent of the cross sections having sound transmission times in excess of 300 µsec./ft. (984 µsec./m) contained honeycomb or surface checks; 96.5 percent of the sections having times less than 250 µsec./ft. (820 µsec./m) contained no defects; 68.2 percent having times between 250 to 300 µsec./ft. (820 to 984 µs/m) contained no defects.

It is also beneficial to display transit times and corresponding cross sections within an individual board to further highlight the relationship between transit time and the presence of honeycomb or surface checks. **Figures 2** and **3** show transit times and corresponding cross sections for three specimens. As illustrated, large increases in transit times arc directly associated with sections containing honeycomb and surface checks. A naturally occurring defect, such as a knot, resulted in a small increase in transit time, and these defects tended to result in a localized increase in transit time. Whereas, honeycomb and surface checks tended to have a large increase in transit time over a greater area of the board.

CONCLUSIONS

Based on our results, we conclude the following:

1. Sound transmission time perpendicular to the grain is significantly increased by the presence of honeycomb and surface checks in red oak lumber.

2. As a result of the nondestructive nature of this test, ultrasonic NDE techniques show promise as an on-line inspection to detect honeycomb and surface checks in dried lumber.

For confirmation, we recommend that a verification study be conducted using larger sample sizes of mill-run material.