Disc separation: the effect of disc geometry

John H. Klungness and James W. Evans

Chemical Engineer and Mathematical Statistician, respectively, USDA Forest Service, Forest Products Laboratory, One Gifford Pinchot Dr., Madison, Wis. 53706-2398

ABSTRACT Net cleaning value is the economic value added to the wastepaper pulp by removing the contaminants, corrected for the fiber lost to the rejects, minus the cost of the energy consumed in the separation process. This study was undertaken to determine whether changing the geometry of a 152-mm-diameter disc surface from that of a flat surface to one having a concave indentation would improve the net cleaning due. Hot-melt adhesive contaminant was removed from a simulated pulp furnish composed of corrugated fiberboard. At optimum operating condtions, a net cleaning due of $129/metric ton was obtained for a flat disc, compared to a measured $l25/meuic ton for the indented disc. The energy saved from the reduced speed requirement for the indented disc was more than offset by an increase in fiber loss, from 5.9% for the flat disc to 9.9% for the indented disc. Contaminant removal was slightly higher for the indented disc.

KEYWORDS
Adhesives
Angular velocity
Impurities
Kraft pulps
Power
Recycling
Rotating discs
Rotational velocity
Separation
Stock preparation
Velocity measurement

Disc separation has the potential for contaminant removal from recycled wastepaper pulp *(1–3)*. To increase the economic value derived by disc separation, disc geometry needs to be optimized with respect to net cleaning value. Net cleaning value, V_n, is the economic value added to the wastepaper pulp by removing the contaminants, corrected for the fiber lost to the rejects, minus the cost of the energy consumed in the separation process, V_e. Because V_e is almost entirely dependent on the energy required to drive the disc separator *(2)*, optimized V_n should occur where process conditions are such that disc speed (revolutions/s) and fiber loss are low and contaminant removal is high. Little research has been done, however, on determining how disc design affects the disc speed and separation process.

Separator disc geometry evolved from conventional atomization discs *(4–7)*, which are typically concave *(8)*. However, with disc separation of contaminants from pulps. a flat disc design was used to more easily evaluate the effect of lip angle on separation effectiveness. High-speed photography has indicated that the pulp slurry velocity in the tangential direction (VL_θ) at the disc shoulder is about half that of the flat surface of the rotating disc. Atomization discs are typically concave to reduce ΔVL_θ between the disc surface and liquid feed, thus reducing disc speeds and energy costs *(8)*.

Our study was undertaken to determine whether changing the geometry of a 152-mm-diameter disc from that of a flat surface to one having a concave indentation would reduce disc speed requirements while maintaining or increasing the value for removing contaminants corrected for fiber loss. The indented disc geometry would be expected to reduce ΔVL_θ between the pulp slurry and the disc surface. Reduced ΔVL_θ would allow for lower disc speeds and increased overall disc separation performance as reflected by lower V_e and increased V_n, if the value for contaminant removal corrected for fiber loss to the rejects is not reduced.

Two discs were evaluated: one with a flat surface (Fig. 1) and the other with a concave indentation (Fig. 2).

Corrugated fiberboard sheets contaminated with hot-melt adhesive (HMA) were used to simulate a pulp furnish composed of old corrugated container (OCC). Process conditions such as feed rate, pulp slurry solids, and disc speed were optimized for each disc by maximizing V_n. At optimum conditions, the V_n values, contaminant removal efficiencies, fiber recovery efficiencies. and energy requirements were compared. Also, at optimum conditions. the effect of disc geometry was evaluated as it relates to (a) particle velocity and contaminant removal and (b) dif-

ferential pulp slurry velocity and fiber loss.

Results and discussion

Overall performance

At optimum conditions for the 152-mm-diameter flat disc, a V_n of \$129/metric ton was obtained (Table I). The optimum V_n for the 152-mm-diameter indented disc was lower, being \$125 per metric ton. The difference between the optimum values for V_n for the two discs is much larger than the experimental variation of about \$0.5/metric ton at optimum conditions. Operating conditions for optimum values of V_n were predicted from a model obtained by statistically designed experiments. These V_n values themselves were obtained by experimental results at the predicted optimum operating conditions.

Contaminant removal of HMA using the indented disc was 86.9%, and it was 85.1% for the flat disc. For the flat disc, 5.9% fiber was lost to the rejects, compared to 9.9% lost by the indented disc. This lower fiber loss was the main factor for the higher V_n for the flat disc. At optimum operating conditions, the indented disc did, however, require less energy (266 MJ/metric ton) than the flat disc (342 MJ/metric ton), as a result of a disc speed of 82.6 rev/s for the indented disc vs. 92.5 rev/s for the flat disc. For our study, the energy cost, V_e, was calculated to be \$4.52/metric ton for the indented disc vs. \$5.18/metric ton for the flat disc. These V_e values are small compared to the V_n values.

Disk geometry, contaminant removal, and fiber loss

The removal of contaminants would be expected to arise from forces acting at the surface of the liquid film *(1)*. These forces would be centrifugal forces resulting from (a) the spin of the liquid film about the axis of disc rotation and (b) the change in direction of the liquid film going over the disc shoulder (Figs. 1 and 2). These can be described as *(CF)*:

$$CF = M(VL)^2/R \qquad (1)$$

where

M = mass of solidd particle

VL = absolute velocity of solid particle

R = radius of curvature.

The radius of curvature of the 152-mm-diameter discs (R_d) is 76 mm at the disc shoulder. The radius of curvature of the disc shoulders (Rs) is 1.6 mm. Measured absolute particle velocities in both radial and tangential directions are of the same order of magnitude for both discs (Table I). Thus, the centrifugal force arising from the radial spin of the solid particles (VL_θ, R = 76 mm) would be expected to be much smaller than the centrifugal force that arises from the change in the direction of solid particles of the disc shoulder (VL_r, R = 1.6 mm). Thus, VL_r would have much greater effect on particle removal from the film surface than VL_θ. The value of 10.4 m/s for VL_r for the flat disc is smaller than the 12.9 m/s measured for the indented disc. This difference may explain the slightly lower contaminant removal obtained with the flat disc.

Contaminant removal and fiber loss between the two discs were not proportional. For example, contaminant removal was 85.1% for the flat disc and 86.9% for the indented disc. Given a 5.9% fiber loss for the flat disc, one would thus expect a 6% fiber loss for the indented disc; however, a 9.9% fiber loss was measured. The resultant shear, ΔVL_{res}, was reduced from 32.1 m/s for the flat disc to 29.9 m/s for the indented disc. Perhaps shear is a factor in the separating process which attracts the pulp slurry to the solid rotating disc, causing less fiber loss at higher shear rates.

The effect of shear intensity on the disc separation process was briefly studied. The indented disc was fitted with 18 equally spaced radial vanes to reducesheartomuch lower intensities by forcing ΔVL_θ to approach zero. The outside diameter of the vanes was 117mm. Water fed at 2.27m³/h to the disc rotatingat 83 rev/s did not follow the disc lip, but it was completely rejected to the reject chamber. Water was used to expedite the obtaining of results. Earlier experiments showed that water and low-consistency pulp slurries gave about the same ratios of accept rates to feed rates. A high reject rate was also noted at 33 rev/s, the lowest disc speed setting These results add credenceto the notion that

1. Cross-section of a 152.4-mm-diameter disc. Surface area to disc shoulder 2.33 × 10⁴ mm².

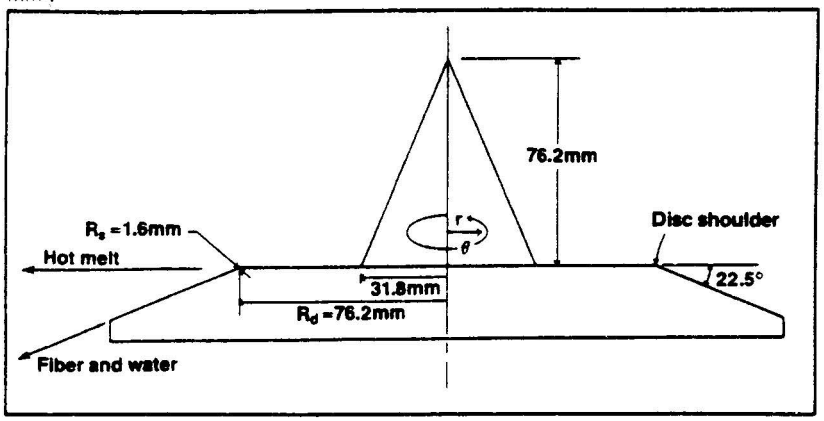

2. Cross-section of 152.4-mm-diameter indented disc. Surface area to disc shoulder 2.35 × 10⁴ mm².

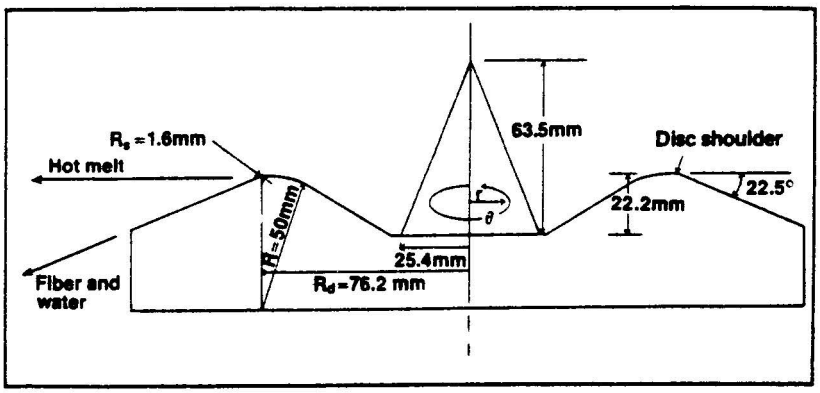

I. Disc separation of HMA at optimum conditions and measured particle velocities

	Flat[a]	Indented[b]
Conditions		
Disc speed, rev/s	92.6	82.6
Feed solids, %	0.4	0.6
Feed rate, m^3/h	2.22	1.36
Results		
Fiber loss, %	5.9	9.9
Contaminant removal, %	85.1	86.9
Energy use,[c] MJ/metric ton	342	266
Energy cost,[d] $/metric ton	5.18	4.52
V_n, $/metric ton	129	125
Absolute particle velocity[e]		
VL_r, m/s	10.4	12.9
VL_θ, m/s	15.8	12.6
VL_{res}, m/s	18.9	18
Differential particle velocity[e]		
ΔVL_r, m/s	10.4	12.9
ΔVL_θ, m/s	28.5	27
ΔVL_{res}, m/s	32.1	29.9

[a]Top-fed disc, top diameter 152 mm, lip width 51 mm, lip angle 22.5° from horizontal.
[b]Same, except with 22.2-mm-deep concave indentation.
[c]Based on $0.017/MJ.
[d]Based on $165/metric ton differential fiber cost.
[e]Std. dev. of ±0.7 m/s, based on pooled standard deviation.

shear between the disc and the liquid is needed to minimize fiber loss to the reject stream. It also raises the question of whether ΔVL_θ and ΔVL_r are of equal importance in minimizing fiber loss to the rejects.

The seemingly apparent need for a certain amount of shear between a flat disc and the pulp slurry was also observed in an earlier study *(9)*. In that study, the use of a rotary feed device reduced the energy needed for contaminant removal by 20% to 60%. depending on the contaminant type. The reduction in energy was apparently accomplished by reducing the amount of shear between the spinning disc and the pulp slurry—at the expense, however, of reduced removal efficiency and increased fiber loss. These results alsosuggest an apparent need for a certain amount of shear between the pulp slurry film and the spinning disc, to achieve high contaminant removal with low fiber loss. Additional work is needed, however, before definite conclusions can be drawn as to the need for shear between the disc and the pulp slurry.

II. Optimum operating conditions and predicted net cleaning values

	Flat	Indented
V_n, $/metric ton	129.4	125.49
Disc speed, rev/s	92.3	82.5
Feed solids, %	0.5	0.6
Feed rate, m^3/h	2.	1.27

Conclusions

Changing the geometry of a disc from that of a flat surface to that of a concave indentation reduced disc speed and the velocity difference between the pulp slurry and the rotating disc at optimum operating conditions. The indented disc required less disc speed (82.6 vs. 92.6 rev/s) and energy (266 vs. 342 MJ/metric ton) than the flat disc but resulted in greater fiber loss (9.9% vs. 5.9%). A net cleaning value of $129/metric ton was obtained for the flat disc vs. $125/metric ton for the indented disc. The higher net cleaning value for the flat disc was mainly caused by a lower fiber loss. Apparently. higher fiber loss with the indented disc is related to the lower shear between the pulp slurry and the disc. Evidently, shear is needed to minimize fiber loss to the reject stream. Contaminant removal apparently depends to a greater extent on the particle radial velocity than on the tangential velocity. The relative importance of ΔVL_r and ΔVL_θ for minimizing fiber loss to the reject stream and the relative importance of VL_r and VL_θ for contaminant removal should be established to aid the optimization of disc design.

Materials and experimental procedures

Experimental procedure

A pulp slurry was prepared from HMA-contaminated corrugated fiberboard sheets, which was used to simulate OCC furnish contaminated with HMA *(2)*. Separation of HMA from the fiber was optimized using two discs (Figs. 1 and 2) and the Forest Products Laboratory experimental equipment *(2)*. Both discs had 152-mm diameters and 50.8-mm lips at 22.5° to the horizontal. The radius of the disc shoulder for both discs was a nominal 1.6 mm. This radius was checked by enlarged photomicrographs. The surface area of the flat disc was 2.33 x 10^4 mm^2 for the flat disc and 2.35 x 10^4 mm^2 for the indented disc. Operating procedures, contaminant removal evaluations. and determinations of accepts-to-feed ratio were also performed as described earlier *(2)*. Fiber costs current at the time of the experiments were used. Never-dried unbleached softwood kraft was valued at $204/metric ton, and OCC was valued at $38 per metric ton.

Net cleaning value

Processes are not 100% effective in removing contaminants, they incur fiber losses to the reject stream, and they requireenergy tooperate. Therefore, Eq. 2 was obtained to describe the net cash value added by contaminant removal.

$$V_n = (\Delta C) R (A/F) - V_e \qquad (2)$$

where

V_n = net cleaning value, dollars/metric ton of fiber (dry basis)

ΔC = differential pulp costs (value of pulp needing no cleaning less the value of pulp needing cleaning). dollars/metric ton of fiber (dry basis)

R = contaminant removal efficiency, % contaminant removal/100%

A = pulp fiber (dry basis) in accept stream, metric tons

F = pulp fiber (dry basis) in feed. metric tons

V_e = cost of energy consumed in the separation process (calculated at the rate of $0.017/MJ), dollars/metric ton of fiber (dry basis) in the feed.

From Eq. 2 we see that if no contaminant is removed by the process (R = 0), no value is needed, and a negative net cash value is obtained because of energy costs (V_e). Likewise, if all contaminants are removed (R = 1.0). but all the fiber is lost in the reject stream (A = 0), a negative cash value is obtained. Thus, we conducted experiments to maximize V_n.

Experimental design

Optimum V_n was obtained using a central composite experimental design *(10)* in three dimensions (disc speed, feed solids. and feed rate) with four center points, for a total of 18 observations. Values for V_n for each experimental run were calculated using the methoddescribed earlier *(2)*. From the experimental V_n values, a model was developed to predict V_n as a function of disc speed. feed solids, and feed rate. From this model, optimum conditions were predicted. The optimum operating conditions and predicted

V_ns are listed in Table II.

With the indented disc for all 18 experimental observations, the mean difference between the predicted V_n valuesand the experimental V_n values was $3.98/metric ton. However, the difference between the predicted and the measured optimums was only $0.75/metric ton (Table I). With the flat disc for all 18 experimental ob servations, the mean difference between the predicted and measured V_n at optimum values was $6.48/metric ton. For the flat disc, the mean difference between the predicted and measured V_n at optimum conditions was only $0.15/metric ton. For both discs, the predicted and experimental V_n values were in closest agreement at the optimum process conditions.

Particle velocity measurements

High-speed motion pictures were taken at the optimum operating conditions using a Fastex camera at about 7000 frames/s and Eastman Tri-X film photographed at ASA 160. Resolution was such that individual fibers did not appear in the photos. Thus, black construction paper was partially fiberized to give fiber bundles of about4 mm^2 in total area. These fiber bundles were added to the fiber slurry and were visible in subsequent photos. Radial lines were drawn and labeled on the discs at 20° intervals. The radial lines also were visible in the photos.

Filmstrips showing fiber bundle movement with respect to the radial lines on the disc were used to measure particle speeds. Radial and tangential velocities with respect to the disc shoulder were measured. Absolute velocities of the fiber bundles (VL_r and VL_θ) were determined using the known speed of the disc shoulder. Three filmstrips were analyzed, and the results were averaged for each reported speed. The pooled standard deviation for particle velocity was 0.7 m/s.

Literature cited

1. Klungness, J.H., Oroskar, A.R., and Crosby, E.J., Tappi J. 67(6): 78(1984).
2. Klungness, J.H., Tappi J. 70(3): 131(1987).
3. Klungness, J.H., Tappi J., in press.
4. Oroskar, A.R., Crosby, E.J., and Klungness, J.H., 1983 Pulping Conference Proceedings, TAPPI PRESS, Atlanta, p. 673.
5. Oroskar, A.R., Ph.D. thesis, Spray Fractionation, Univ. of Wisconsin-Madison, 1981.
6. Moller, K., Duffy, G.G., Moller, J.T., and Fogmar, P., Tappi 63(9): 89 (1980).
7. Moller, K., deRuvo, A., Norman, B., and Felsvang, K., Paper Technol. Ind. 20(3): 110(1979).
8. Marshall, W.R., Chem. Eng. Prog. Monograph Ser. (2): 50(1954).
9. Klungness, J.H., unpublished Internal Forest Products Laboratory Report, Feb. 1985.
10. Myers, R.H., Response Surface Methodology, Allyn and Bacon, Inc., Boston, 1971, ch. 5-7.

The use of trade, firm, or corporation names in this publication is for the information and convenience of the reader. Such use does not constitute an official endorsement or approval by the U.S. Dept. of Agriculture of any product or service to the exclusion of others that may be suitable.

The Forest Products Laboratory is maintained in cooperation with the University of Wisconsin. This article was written and prepared by U.S. Government employees on official time. and it is therefore in the public domain and not subject to copyright.

The authors gratefully acknowledge the contributions of James K. Brooks and Steven A. Schmieding for the high-speed photography and Richard W. Shilt and Charles W. Polley for laboratory and pilot plant evaluations.

Received for review Oct. 20, 1986.

Accepted March 9, 1987.

Printed on recycled paper