United States
Department of
Agriculture

**Forest Service**

Forest
Products
Laboratory

Research
Paper
FPL–RP–591

# Effect of Moisture Content on Nail Bearing Strength

**Douglas R. Rammer**

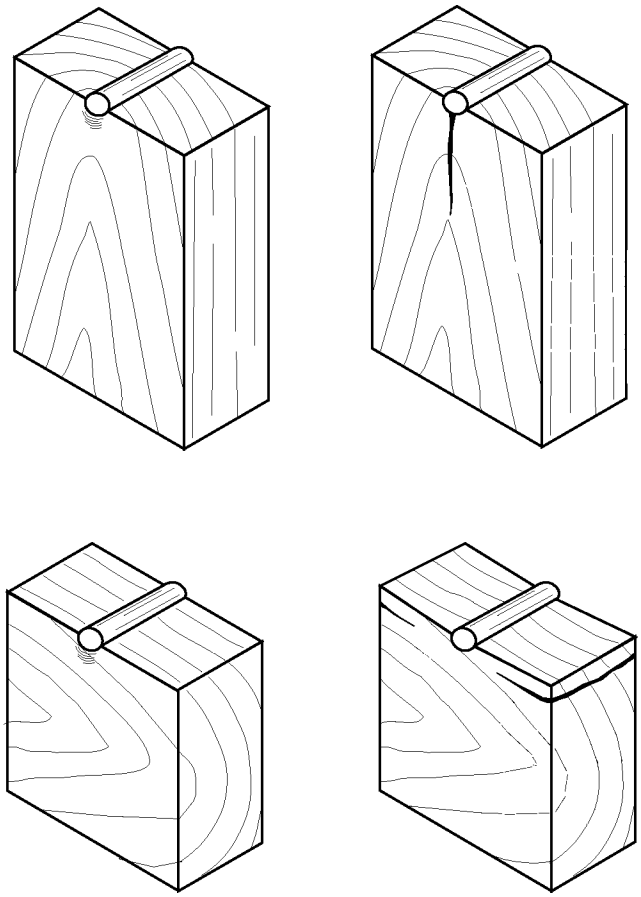

# Abstract

Current philosophy of lateral connection design strength is based on the yield theory that relates connection performance to fastener bending strength and wood dowel bearing strength. This study investigated the nail bearing properties of four species groupings, Southern Pine, yellow-cedar, Spruce–Pine–Fir, and maple, at various moisture content levels and different nail diameters. Spruce–Pine–Fir nail bearing strength specimens were tested at six different moisture contents (green, 19%, 15%, 12%, 9%, and 6%) and with three different nail diameters (3.33 mm (0.131 in.), 4.11 mm (0.162 in.), and 5.72 mm (0.225 in.)). An additional grouping was generated for 3.76-mm- (0.148-in.-) diameter nails at 12% moisture content. Remaining species were tested with only a 4.11-mm- (0.162-in.-) diameter nail and reduced moisture content levels. The objective was to determine the effect of moisture content, specific gravity, grain orientation, and nail diameter on the nail bearing properties. Results indicate that grain orientation affected nail bearing stiffness and strength, but no statistically significant conclusion was drawn about the effect of nail diameter on bearing properties. Generally, the value of average bearing properties decreased as nail diameter increased. Expressions were developed relating the moisture content to nail bearing properties for each species and relating specific gravity and nail bearing properties at four moisture content levels.



Keywords: dowel, bearing strength, moisture content, nails, design criteria, connections

February 2001

Rammer, Douglas R. 2001. Effect of moisture content on nail bearing strength. Res. Pap. FPL-RP-591. Madison, WI: U.S. Department of Agriculture, Forest Service, Forest Products Laboratory. 22 p.

A limited number of free copies of this publication are available to the public from the Forest Products Laboratory, One Gifford Pinchot Drive, Madison, WI 53705–2398. Laboratory publications are sent to hundreds of libraries in the United States and elsewhere.

The Forest Products Laboratory is maintained in cooperation with the University of Wisconsin.



The United States Department of Agriculture (USDA) prohibits discrimination in all its programs and activities on the basis of race, color, national origin, sex, religion, age, disability, political beliefs, sexual orientation, or marital or familial status. (Not all prohibited bases apply to all programs.) Persons with disabilities who require alternative means for communication of program information (Braille, large print, audiotape, etc.) should contact the USDA's TARGET Center at (202) 720–2600 (voice and TDD). To file a complaint of discrimination, write USDA, Director, Office of Civil Rights, Room 326-W, Whitten Building, 1400 Independence Avenue, SW, Washington, DC 20250–9410, or call (202) 720–5964 (voice and TDD). USDA is an equal opportunity provider and employer.


# Contents


*Page*

Introduction....1
Background....1
Effect of Moisture on Wood Strength....1
Dowel Bearing Strength....1
Moisture Effects on Dowel Bearing Strength....2
Research Methods....3
Data Analysis....4
Offset Analysis....4
Moisture Intersection Calculation....5
Results....5
Specific Gravity....5
Moisture Content....6
Parallel-to-Grain Nail Bearing Specimens....6
Perpendicular-to-Grain Nail Bearing Specimens....7
Observations....8
Failure Modes....8
Load–Deformation Curves....9
Discussion and Comparisons....10
Effect of Grain Orientation....10
Effect of Nail Diameter....11
Effect of Moisture Content....12
Probability Distributions....13
Specific Gravity–Nail Bearing Strength Relationship....16
Conclusions....19
References....20
Appendix—Nonparametric Distributional Information....21

# Effect of Moisture Content on Nail Bearing Strength

**Douglas R. Rammer**, Research General Engineer
Forest Products Laboratory, Madison, Wisconsin

## Introduction

Currently in the United States, both nailed and bolted lateral connections are designed by the yield theory (AF&PA 1997, ASCE 1996). This theory relates the 5% diameter offset load to connection geometry, dowel bearing strength, and dowel bending yield strength. Wilkinson (1991) determined both bolt and nail bearing strength for several wood species. Unfortunately two species groupings, which accounted for 40% of the nail data sets, were at a moisture content (MC) of about 6%. Because the application of the yield theory is relatively new in the United States, few studies have been conducted according to accepted ASTM test procedures that completely define the factors influencing nail bearing strength. One such factor is MC.

The objective of this study was to determine the effect of MC and specific gravity on nail bearing properties. Also, comparisons were made to determine if nail bearing properties were affected by nail diameter and direction of loading relative to grain orientation.

## Background

### Effect of Moisture on Wood Strength

The *Wood Handbook* (Forest Products Laboratory 1999) provides a general discussion of the effect of MC on clear wood strength properties. It has been widely accepted that as MC goes from the fiber saturation point (FSP) to dry, the strength properties of wood increase. However, as Green and Kretschmann (1994) discuss, there is growing evidence that different strength and stiffness properties are affected to varying degrees by changing levels of MC. For example, the bending modulus of elasticity (MOE) of clear Southern Pine increases linearly with drying from green to 4% MC, while MOE of compression parallel to grain increases linearly with drying from green to about 6% MC, then increases at a slower rate or remains constant with further drying. Ultimate tension stress, both parallel and perpendicular to grain, peaks in a range of 7% to 13% MC and then decreases with further drying.

The FSP is the MC level at which all liquid water has been removed from the cell cavities but the woody cell wall remains saturated. It is generally assumed that material properties above the FSP do not change. Below the FSP, water is removed from the wood cell wall causing the mechanical properties to change. It has long been known that the FSP value and the MC level at which mechanical properties are observed to change are different. The MC level where mechanical properties are observed to change is called the intersection MC, $M_p$.

Wilson (1932) proposed one of the first methods for calculating the $M_p$ value. He made a log transformation of the dry data and fit a linear curve to the transformed data. The intersection between the dry linear curve and the average saturated property data established the $M_p$ values for the property.

### Dowel Bearing Strength

Only recently has an ASTM standard for evaluating dowel bearing strength been developed and accepted (ASTM 1996). Therefore, only a limited amount of dowel bearing strength data has been generated according to this new ASTM standard. European countries standardized their dowel bearing testing procedure in the early 1990s (European Committee for Standardization 1993). This procedure defines the bearing strength using the maximum load or a limiting deformation of 5 mm. Additionally, the European dowel bearing test specimen encases the dowel with wood and allows flexibility in the dowel to occur, whereas the current ASTM standard does not.

Smith and others (1988) determined that nail bearing strength is a function of both specific gravity and nail diameter. They used Sitka spruce, Scots pine, European redwood, European whitewood, and Canadian spruce–pine–fir for the softwood species with specific gravities between 0.4 and 0.5 and Malaysian keruing and South American greenheart for the hardwood species. These tropical hardwood species have a specific gravity about 0.75 and 1.00, respectively. For the softwoods, they used nail diameters of 2.65, 3.35, 4.00, 5.00, and 6.00 mm, and for the hardwoods, they used nail diameters of 3.55 and 6.00 mm. Based on these experimental results, they derived the following relationships for softwoods and tropical hardwoods:

$$S = 0.048\rho\left(\frac{d}{6}\right)^{-0.036} \quad \text{for softwoods}$$

$$S = 0.071\rho\left(\frac{d}{6}\right)^{-0.28} \quad \text{for tropical hardwoods}$$

where $S$ is the maximum bearing strength (N/mm$^2$), $d$ is the nail diameter (mm), and $\rho$ is the timber mass density (kg/m$^3$) with mass and volume at 13% MC. There was a difference between the parallel- and perpendicular-to-grain orientation, but since this difference was small, data were combined for the regression analysis.

Wilkinson (1991) determined the dowel bearing strength for several wood species. His material ranged between 0.36 and 0.52 in specific gravity and focused on 19.1-mm (0.75-in.) bolts and 4.11-mm (0.162-in.) nails. Expressions were developed that related the specific gravity and dowel diameter for bolts aligned parallel and perpendicular to grain and nails driven into side grain. These expressions were later accepted into the current wood construction specifications (AF&PA 1997, ASCE 1996). Dowel bearing stress of nails that is applicable for both wood main and side member is

$$F_e = 114.45G^{1.84}$$

where $F_e$ is the nail bearing strength expressed in N/mm$^2$ and $G$ is the specific gravity defined using ovendry weight and volume. An FPL internal re-evaluation of Wilkinson's nail data revealed that the specific gravity was miscalculated and two species groupings, Southern Pine and Spruce–Pine–Fir, had significantly lower MC values (6% lower).

Pope and Hilson (1995) experimentally compared the ASTM D5764 and the EN 383 dowel test procedures using two sizes of bolts with loading applied parallel and perpendicular to grain. They concluded that ASTM and EN 383 procedures gave similar results for parallel-to-grain values but the EN 383 perpendicular-to-grain results were significantly greater than the ASTM values.

Rammer (1999) evaluated the validity of using Wilkinson's nail bearing strength expression for high-density wood species. Parallel-to-grain nail bearing tests were conducted using nails with two different diameters (3.33 and 6.2 mm) and two Guatemalan hardwoods with specific gravity values of 0.70 and 0.76. Rammer showed that exploration of Wilkinson's expression to higher specific gravity species is unwarranted and that the diameter of the nail had a statistically significant effect on the nail bearing strength.

## Moisture Effects on Dowel Bearing Strength

Rammer and Winistorfer (2001) tested Southern Pine at 4%, 6%, 12%, 19%, and green MC levels to develop an expression that relates parallel-to-grain bolt bearing strength to MC. Bolt bearing strength at 20% MC is related to the other four moisture levels by the following expressions:

$$F_e \text{ @ } 15\% = 1.23(F_e \text{ @ } 20\%)$$

$$F_e \text{ @ } 12\% = 1.36(F_e \text{ @ } 20\%)$$

$$F_e \text{ @ } 6\% = 1.63(F_e \text{ @ } 20\%)$$

$$F_e \text{ @ } 4\% = 1.72(F_e \text{ @ } 20\%)$$

Rammer and Winistorfer (2001) validated this model by comparing it with previous Douglas-fir, Southern Pine, and Spruce–Pine–Fir nail bearing strength results at 6% and 20+% MC. These tests were conducted on specimens with a routed groove nearly the same size as the nail; therefore, the moisture adjustments shown are valid for dowels with predrilled holes equal to or greater than the dowel diameter.

In addition to Rammer and Winistorfer's moisture expressions, Fahlbusch (1949) developed an expression to relate MC and parallel-to-grain dowel bearing strength. The relationship he developed used pine, ash, and linden solid wood and a 12-mm bolt and is valid between 5% and 30% MC. The following is Fahlbusch's relationship:

$$f_{eu} = \frac{26 f_{e12}}{u + 14}$$

where $u$ is MC (%), $f_{eu}$ is the peripheral hole strength (kg/cm$^2$) at MC $u$, and $f_{e12}$ is the peripheral hole strength (kg/cm$^2$) at 12% MC.

More recently, Koponen (1991) developed a bilinear model to describe the effect of MC on dowel bearing strength relationship for 12- to 20-mm-diameter bolts. Conducting tests on Finnish spruce that had an average specific gravity of 0.48, Koponen varied the MC between 9% and green to arrive at the following dowel bearing strength expression:

$$f_e = 46.7 - 1.35u \quad \text{when } u < 22.5\%$$
$$f_e = 16.5 \quad \text{when } u > 22.5\%$$

where $u$ is MC (%) and $f_e$ is dowel bearing strength in N/mm$^2$. He also developed a bilinear model for the effect of MC on stiffness.

$$k_1 = 92 - 3.9u \quad \text{when } u < 19.7\%$$
$$k_1 = 14.6 \quad \text{when } u > 19.7\%$$

where $k_1$ is the 10% to 40% maximum load secant stiffness. Koponen also developed an expression relating specific gravity to both dowel bearing strength and stiffness for all bolt diameters tested.

All previous research focused on determining the effect of moisture on the parallel-to-grain dowel bearing strength with bolts, not with nails or perpendicular to grain. Research outlined here will investigate the effects of MC on both parallel- and perpendicular-to-grain dowel bearing strength,

nail diameter effects, distributional properties, and linear dowel bearing specific gravity relationships.

## Research Methods

Four species groupings, Southern Pine (SP), yellow-cedar (YC), Spruce–Pine–Fir (SPF), and maple (M), were tested to determine nail bearing strength at several different MC levels. The SPF material was used to conduct a majority of the experimental study. One hundred 39- by 90-mm source SPF members were sorted by specific gravity into two groups of 50. From one group of 50 SPF specimens, all the 3.33- and 4.11-mm specimens were derived, and from the other group, all the 3.72- and 5.72-mm specimens were derived. Within each group, specimens for the various moisture conditions were cut from the same board with care taken to eliminate natural defects in the resulting material. No two specimens for given nail diameter and moisture level were derived from the same source piece. Matched parallel- and perpendicular-to-grain specimens for a similar nail diameter and moisture level were derived from adjacent source material (Fig. 1). Both SPF parallel- and perpendicular-to-grain nail bearing strengths were tested at six different MC levels (saturated, 19%, 17%, 12%, 9%, and 6%) and with three different nail diameters (3.33 mm (0.131 in.), 4.11 mm (0.162 in.), and 5.72 mm (0.225 in.)). An additional grouping was generated for 3.76-mm (0.148-in.) nail diameter at 12% MC. Large replication numbers were used to conduct a statistical evaluation on the effect of nail diameter and grain direction on nail bearing strength.

To be consistent with Wilkinson's original work, the remaining tests were conducted using a 4.11-mm- (0.162-in.-) diameter nail. The SP, YC, and M species were tested parallel and perpendicular to grain at the following moisture conditions: saturated, 17%, 12%, and 6%. An additional 9% MC for SP was added to better characterize the potential flattening of nail bearing strength for lower MC level, which was the response observed by Green and Kretschmann (1994) in other SP mechanical properties. The number of specimens and average sizes for the nail bearing tests are listed in Table 1.

All the source material had MC levels below the fiber saturation point. A rewetting process was used for the saturated specimen to achieve a MC level greater than the fiber saturation point. Wood material was placed into a pressure-treating vessel. Water was introduced in the cylinders under pressure for several hours. A control specimen was removed, and an electronic moisture meter determined the MC. When the MC levels of the control specimens were significantly greater than FSP for that species, all the specimens were removed. From this point on, the saturated material was maintained in a wet condition during fabrication and testing.

Specimen preparation followed procedures outlined in ASTM D 5764 Section 8.2.4 (ASTM 1996). Specimens were cut and clamped, and a pilot hole was drilled and then nailed. A pilot hole 75% the diameter of the shank was drilled prior to nailing. Specimens were nailed between 24 and 32 hours before testing. During the 24-hour waiting time, specimens remained in the appropriate conditioning room. For the 19% and saturated moisture conditions, specimens were placed in sealed plastic bags to minimize any drying effects during the 24-hour waiting period.

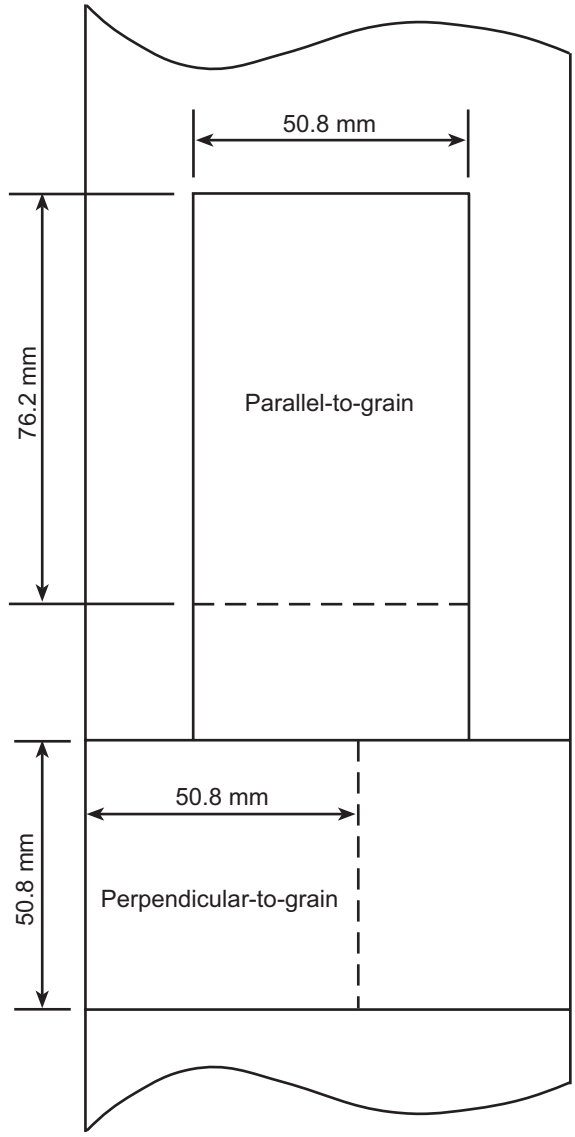


**Figure 1—Orientation of matched parallel- and perpendicular-to-grain specimens in source material.**

The rate of testing was a constant 1.02-mm/min (0.04 in./min) for all specimens tested. This means that, on average, the 3.33-mm nail specimen failure times were 40% faster than the 5.76-mm nail test times. Deflection of the testing machine load head was measured with a linear

**Table 1—Summary of the number and sizes of specimens used for nail bearing tests**

| Species | Nail diameter (mm) | Moisture content | Perpendicular-to-grain specimens | | | | Parallel-to-grain specimens | | | |
|---|---|---|---|---|---|---|---|---|---|---|
| | | | No. tested | Width (mm) | Depth (mm) | Length (mm) | No. tested | Width (mm) | Depth (mm) | Length (mm) |
| Yellow-cedar | 4.11 | 6% | 24 | 24.9 | 50.8 | 49.0 | 33 | 24.9 | 50.8 | 74.4 |
| | | 12% | 26 | 25.1 | 50.9 | 50.7 | 34 | 25.3 | 51.0 | 74.1 |
| | | 17% | 23 | 25.6 | 50.7 | 48.3 | 34 | 25.6 | 50.7 | 74.0 |
| | | Saturated | 24 | 26.0 | 50.9 | 50.9 | 34 | 26.1 | 51.0 | 76.8 |
| Maple | 4.11 | 6% | 29 | 27.1 | 50.7 | 50.2 | 30 | 27.1 | 50.8 | 77.0 |
| | | 12% | 30 | 31.6 | 51.0 | 48.7 | 30 | 31.6 | 51.5 | 74.1 |
| | | 17% | 29 | 31.8 | 51.0 | 48.6 | 30 | 31.7 | 51.0 | 74.0 |
| | | Saturated | 30 | 25.6 | 50.8 | 50.6 | 31 | 25.6 | 51.1 | 77.0 |
| Southern Pine | 4.11 | 6% | 37 | 37.4 | 50.8 | 76.1 | 37 | 37.5 | 50.4 | 76.3 |
| | | 9% | 37 | 37.7 | 50.8 | 76.2 | 37 | 37.6 | 50.5 | 76.4 |
| | | 12% | 42 | 37.8 | 51.3 | 74.9 | 43 | 37.8 | 50.6 | 75.9 |
| | | 17% | 37 | 38.2 | 50.8 | 75.5 | 37 | 38.1 | 51.1 | 76.1 |
| | | Saturated | 37 | 39.6 | 50.8 | 75.8 | 37 | 39.6 | 52.7 | 76.2 |
| Spruce–Pine–Fir | 3.33 | 6% | 49 | 25.6 | 51.0 | 51.3 | 45 | 25.4 | 50.6 | 76.4 |
| | | 9% | 48 | 25.7 | 50.9 | 50.8 | 50 | 25.7 | 51.3 | 76.1 |
| | | 12% | 48 | 25.4 | 50.6 | 50.9 | 49 | 25.4 | 50.8 | 76.1 |
| | | 17% | 48 | 25.4 | 50.9 | 50.7 | 49 | 25.2 | 50.5 | 76.2 |
| | | Saturated | 48 | 25.9 | 50.9 | 50.9 | 49 | 25.8 | 51.8 | 76.0 |
| Spruce–Pine–Fir | 3.76 | 12% | 46 | 25.4 | 50.6 | 51.0 | 31 | 25.4 | 50.9 | 76.2 |
| Spruce–Pine–Fir | 4.11 | 6% | 49 | 25.4 | 50.9 | 51.1 | 49 | 25.5 | 50.7 | 76.3 |
| | | 9% | 49 | 25.8 | 50.9 | 50.9 | 48 | 25.7 | 51.4 | 76.1 |
| | | 12% | 49 | 25.5 | 50.6 | 51.0 | 49 | 25.5 | 50.9 | 76.2 |
| | | 17% | 50 | 25.5 | 50.9 | 50.8 | 50 | 25.3 | 50.6 | 76.1 |
| | | 19% | 50 | 25.6 | 50.9 | 51.9 | 50 | 25.5 | 52.2 | 76.4 |
| | | Saturated | 49 | 26.0 | 50.9 | 50.8 | 50 | 25.8 | 51.8 | 76.2 |
| Spruce–Pine–Fir | 5.76 | 6% | 44 | 25.4 | 51.0 | 51.2 | 39 | 25.3 | 51.1 | 76.4 |
| | | 9% | 47 | 25.8 | 50.9 | 50.7 | 47 | 25.7 | 51.4 | 76.1 |
| | | 12% | 46 | 25.4 | 50.6 | 51.0 | 47 | 25.4 | 50.9 | 76.2 |
| | | 17% | 46 | 25.4 | 50.9 | 50.8 | 47 | 25.4 | 51.1 | 76.1 |
| | | Saturated | 46 | 26.1 | 50.9 | 51.1 | 47 | 26.0 | 51.9 | 75.9 |

variable differential transducer until the deformation exceeded 50% of the nail diameter or the loading apparatus touched the specimen. Load was measured to the nearest pound increment. Load and deformation readings were used to calculate the stiffness and the percentage offset yield loads. Figure 2 shows a parallel-to-grain and perpendicular-to-grain specimen under load.

After testing, MC and specific gravity values for each specimen were found in accordance with ASTM D4442 and ASTM D2395 procedures (ASTM 1995a,b). The entire specimen was used as the sample, and the size of the nail was subtracted for volume calculations. Specific gravity values are based on weight and volume after oven drying.

Microscopic identifications indicated that the 100 source SPF members consisted of the following species: 45 *Picea*, 29 *Abies*, and 26 yellow pine.

# Data Analysis

## Offset Analysis

The 5%, 10%, 25%, and 50% diameter offset yield loads were determined for each specimen by the following procedure. Initial slope of the load–deformation curve is approximated by linearly regressing the data between 20% and 40% of the maximum load. The slope was then offset an

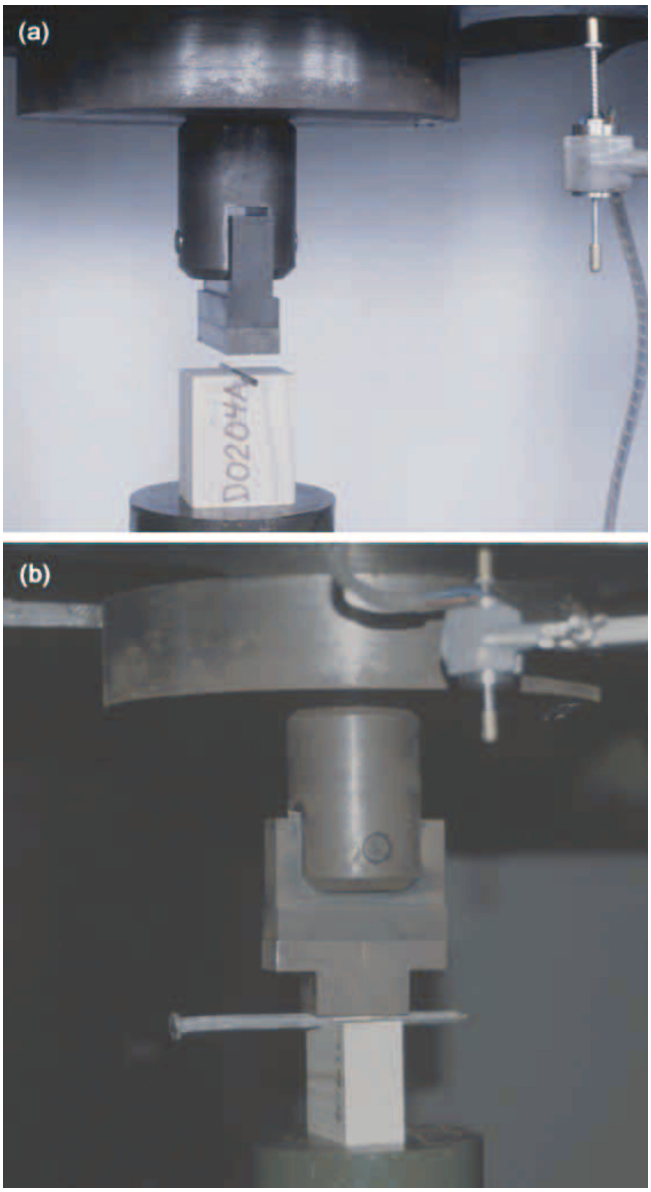


**Figure 2—Nail bearing test configuration (a) parallel to grain and (b) perpendicular to grain.**

amount equal to 5%, 10%, 25%, and 50% of the nail diameter used for that test. The point of intersection of the offset line for a given percentage and the load–deformation curve determined the yield load for that given offset percentage. If the percentage-offset line did not intersect the load–deformation curve, the maximum load of the test was used as the yield load. Figure 3 illustrates the procedure for the 5% offset line. Nail bearing strength values were calculated by dividing yield load by the product of fastener diameter and loaded length of the fastener. Stiffness, for 20% to 40% of the maximum load, is calculated using the slope of the linear regression divided by the product of fastener diameter and loaded length of the fastener.

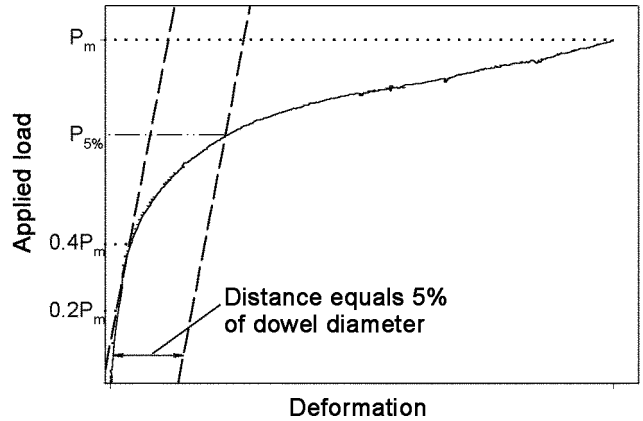


**Figure 3—Offset procedure.**

## Moisture Intersection Calculation

A procedure similar to Wilson's (1932) historic method was used to establish the $M_p$ values for all the material tested. For a given species grouping, nail diameter, and MC level, the data were adjusted to a common specific gravity value using the derived linear specific gravity–nail bearing strength relationship for each given test set. Common specific gravity was the average value for the species, orientation, and nail diameter considered. Once these data were adjusted to a common specific gravity value, a linear and quadratic curve was best-fit to the data. Based both on the correlation coefficient and visual interpretation, a curve was chosen that best represented the data. Moisture intersection $M_p$ was determined as that MC where the average saturated result intersected the best-fit curve for a given species, grain orientation, and nail diameter.

# Results

The average, coefficient of variation (COV), maximum, and minimum specific gravity and MC data for all the moisture groupings and wood species are summarized in Tables 2 and 3. Average stiffness and 5% diameter offset nail bearing strength values are listed in Tables 4 and 5 for parallel- and perpendicular-to-grain loading, respectively. Detailed nonparametric distributional information for the 5% diameter offset strength is given in the Appendix for all test groupings.

## Specific Gravity

Average specific gravity for each species, MC level, and orientation is given in Table 2 along with COV, maximum, and minimum observed values. The average, maximum, and minimum specific gravity values are fairly consistent for each wood species regardless of MC grouping or grain orientation. The SPF COV values are greater than the other test species, but this is expected since the SPF grouping consists of several wood species. The average range of test specimen

**Table 2—Mean, coefficient of variation (COV), minumum, and maximum data for specific gravity[a]**

| Species | Nail diameter (mm) | Moisture content | Specific gravity: Parallel to grain Mean | COV (%) | Minimum | Maximum | Perpendicular to grain Mean | COV (%) | Minimum | Maximum |
|---|---|---|---|---|---|---|---|---|---|---|
| Yellow-cedar | 4.11 | 6% | 0.51 | 8.3 | 0.43 | 0.61 | 0.52 | 6.6 | 0.41 | 0.57 |
| | | 12% | 0.51 | 7.5 | 0.42 | 0.61 | 0.50 | 8.2 | 0.43 | 0.58 |
| | | 17% | 0.50 | 8.2 | 0.42 | 0.59 | 0.51 | 7.2 | 0.42 | 0.55 |
| | | Saturated | 0.52 | 7.9 | 0.44 | 0.62 | 0.51 | 6.9 | 0.42 | 0.55 |
| Maple | 4.11 | 6% | 0.69 | 8.3 | 0.55 | 0.81 | 0.69 | 8.5 | 0.53 | 0.80 |
| | | 12% | 0.69 | 8.1 | 0.52 | 0.81 | 0.70 | 9.5 | 0.50 | 0.87 |
| | | 17% | 0.70 | 8.6 | 0.53 | 0.85 | 0.70 | 8.5 | 0.53 | 0.82 |
| | | Saturated | 0.68 | 8.9 | 0.57 | 0.84 | 0.69 | 9.3 | 0.55 | 0.85 |
| Southern Pine | 4.11 | 6% | 0.60 | 9.8 | 0.52 | 0.73 | 0.61 | 9.7 | 0.52 | 0.72 |
| | | 9% | 0.60 | 8.8 | 0.51 | 0.71 | 0.60 | 9.0 | 0.51 | 0.70 |
| | | 12% | 0.60 | 9.9 | 0.50 | 0.77 | 0.60 | 10.1 | 0.50 | 0.71 |
| | | 17% | 0.61 | 11.2 | 0.49 | 0.74 | 0.61 | 11.0 | 0.48 | 0.72 |
| | | Saturated | 0.60 | 9.3 | 0.51 | 0.73 | 0.60 | 9.7 | 0.50 | 0.72 |
| Spruce–Pine–Fir | 3.33 | 6% | 0.42 | 15.4 | 0.29 | 0.57 | 0.43 | 14.8 | 0.29 | 0.56 |
| | | 9% | 0.43 | 13.8 | 0.30 | 0.55 | 0.43 | 14.4 | 0.30 | 0.56 |
| | | 12% | 0.42 | 14.5 | 0.30 | 0.56 | 0.42 | 14.1 | 0.30 | 0.55 |
| | | 17% | 0.42 | 13.4 | 0.30 | 0.56 | 0.43 | 15.4 | 0.30 | 0.64 |
| | | Saturated | 0.43 | 14.5 | 0.30 | 0.56 | 0.42 | 14.0 | 0.32 | 0.56 |
| Spruce–Pine–Fir | 3.76 | 12% | 0.43 | 14.6 | 0.31 | 0.54 | 0.43 | 14.9 | 0.30 | 0.55 |
| Spruce–Pine–Fir | 4.11 | 6% | 0.42 | 13.6 | 0.29 | 0.56 | 0.42 | 14.0 | 0.29 | 0.55 |
| | | 9% | 0.42 | 14.5 | 0.29 | 0.56 | 0.42 | 14.4 | 0.29 | 0.56 |
| | | 12% | 0.42 | 14.0 | 0.29 | 0.55 | 0.42 | 14.1 | 0.30 | 0.58 |
| | | 17% | 0.42 | 13.6 | 0.30 | 0.56 | 0.42 | 14.0 | 0.30 | 0.56 |
| | | 19% | 0.42 | 13.7 | 0.30 | 0.55 | 0.42 | 13.5 | 0.30 | 0.54 |
| | | Saturated | 0.42 | 13.6 | 0.31 | 0.55 | 0.42 | 13.2 | 0.31 | 0.54 |
| Spruce–Pine–Fir | 5.76 | 6% | 0.43 | 14.4 | 0.29 | 0.57 | 0.43 | 13.7 | 0.29 | 0.54 |
| | | 9% | 0.42 | 13.8 | 0.30 | 0.53 | 0.42 | 14.7 | 0.30 | 0.57 |
| | | 12% | 0.42 | 13.1 | 0.32 | 0.53 | 0.42 | 12.5 | 0.32 | 0.50 |
| | | 17% | 0.43 | 13.4 | 0.30 | 0.54 | 0.43 | 14.1 | 0.29 | 0.55 |
| | | Saturated | 0.43 | 13.5 | 0.27 | 0.53 | 0.42 | 13.9 | 0.28 | 0.53 |

[a]Specific gravity based on ovendry weight divided by ovendry volume.

specific gravity was 0.42 to 0.69 and largely covers the range of specific gravity used in typical wood construction in the United States.

## Moisture Content

Average MC levels for each species, nail diameter, nominal MC level, and orientation are given in Table 3 along with COV, maximum, and minimum observed values. The average, maximum, and minimum moisture values are tightly banded for the lower MC values, but as the target moisture level increased, the variation of MC values increased. Saturated conditions were the most variable, but all specimens achieved MC levels above the generally assumed 30% FSP.

## Parallel-to-Grain Nail Bearing Specimens

Mean and COV values for 20% to 40% of maximum load stiffness and 5% diameter offset strength for each species and nail size loaded parallel to grain are listed in Table 4. Stiffness increased with decreasing MC and was the most variable bearing property. The 5% diameter offset bearing strength values decreased with increasing MC, and the COV for these nails at all MC levels are within the range of

**Table 3—Mean, coefficient of variation (COV), minumum, and maximum data for moisture content**

| | | | Moisture content | | | | | | | |
|---|---|---|---|---|---|---|---|---|---|---|
| | | | Parallel to grain | | | | Perpendicular to grain | | | |
| Species | Nail diameter (mm) | Moisture content | Mean (%) | COV (%) | Minimum (%) | Maximum (%) | Mean (%) | COV (%) | Minimum (%) | Maximum (%) |
| Yellow-cedar | 4.11 | 6% | 6.8 | 2.7 | 6.5 | 7.2 | 6.8 | 4.0 | 6.5 | 7.4 |
| | | 12% | 12.4 | 2.3 | 11.9 | 13.0 | 12.7 | 2.3 | 12.1 | 13.2 |
| | | 17% | 17.8 | 2.1 | 17.3 | 18.5 | 17.1 | 12.6 | 7.3 | 18.1 |
| | | Saturated | 80.9 | 22.6 | 39.4 | 110.2 | 86.6 | 22.8 | 44.4 | 117.6 |
| Maple | 4.11 | 6% | 8.0 | 4.2 | 7.1 | 8.7 | 7.6 | 4.3 | 7.2 | 8.5 |
| | | 12% | 14.3 | 1.9 | 13.8 | 14.9 | 14.4 | 1.7 | 13.7 | 14.8 |
| | | 17% | 18.1 | 6.2 | 17.0 | 21.9 | 18.9 | 6.8 | 16.9 | 21.8 |
| | | Saturated | 90.6 | 15.7 | 56.5 | 115.2 | 92.0 | 13.5 | 67.1 | 116.7 |
| Southern Pine | 4.11 | 6% | 6.3 | 2.9 | 6.0 | 6.6 | 6.2 | 3.1 | 5.8 | 6.5 |
| | | 9% | 9.3 | 2.2 | 8.7 | 9.6 | 9.6 | 2.4 | 8.6 | 9.9 |
| | | 12% | 11.0 | 5.6 | 9.4 | 11.9 | 10.8 | 5.8 | 9.6 | 11.9 |
| | | 17% | 17.4 | 5.4 | 15.8 | 19.4 | 17.0 | 5.94 | 15.5 | 18.9 |
| | | Saturated | 114.2 | 13.2 | 86.9 | 143.2 | 114.7 | 13.46 | 77.6 | 138.9 |
| Spruce–Pine–Fir | 3.33 | 6% | 6.2 | 6.3 | 5.2 | 6.9 | 6.3 | 9.3 | 3.3 | 7.1 |
| | | 9% | 8.9 | 6.7 | 7.1 | 9.7 | 9.0 | 5.9 | 7.4 | 9.8 |
| | | 12% | 11.2 | 9.6 | 8.8 | 13.2 | 11.3 | 9.8 | 8.7 | 13.1 |
| | | 17% | 16.7 | 13.5 | 11.2 | 21.3 | 16.5 | 13.3 | 11.6 | 21.2 |
| | | Saturated | 104.8 | 39.9 | 36.9 | 214.3 | 136.9 | 30.1 | 63.0 | 226.1 |
| Spruce–Pine–Fir | 3.76 | 12% | 11.2 | 10.4 | 8.3 | 12.7 | 11.3 | 9.7 | 8.4 | 13.2 |
| Spruce–Pine–Fir | 4.11 | 6% | 6.4 | 4.7 | 5.7 | 6.9 | 6.2 | 7.2 | 5.1 | 7.0 |
| | | 9% | 8.8 | 6.7 | 6.8 | 9.6 | 8.9 | 6.9 | 6.8 | 9.8 |
| | | 12% | 11.2 | 9.9 | 8.5 | 12.8 | 11.4 | 18.2 | 8.3 | 23.2 |
| | | 17% | 16.6 | 13.6 | 11.4 | 21.2 | 16.6 | 13.6 | 11.7 | 21.7 |
| | | 19% | 17.5 | 10.8 | 12.3 | 21.1 | 17.7 | 10.1 | 12.8 | 21.2 |
| | | Saturated | 106.0 | 38.3 | 34.6 | 226.3 | 135.6 | 27.8 | 56.2 | 226.7 |
| Spruce–Pine–Fir | 5.76 | 6% | 6.6 | 5.8 | 5.5 | 7.1 | 6.4 | 6.7 | 4.9 | 7.0 |
| | | 9% | 9.1 | 6.7 | 6.9 | 10.0 | 9.1 | 7.0 | 7.0 | 10.9 |
| | | 12% | 11.4 | 9.0 | 8.7 | 13.0 | 11.3 | 8.5 | 8.4 | 12.8 |
| | | 17% | 16.5 | 11.2 | 13.2 | 20.2 | 16.5 | 14.1 | 12.8 | 21.1 |
| | | Saturated | 108.6 | 38.9 | 59.0 | 236.9 | 132.7 | 30.5 | 76.1 | 249.0 |

Wilkinson's findings. Effect of MC on the 5% diameter offset bearing strength is shown in Figures 4a through 9a. In these figures, saturated specimen results are plotted at the moisture intersection point $M_p$. These figures show that parallel-to-grain nail bearing strength generally increases as the MC decreases. SP parallel-to-grain specimens showed a decrease in 5% bearing strength for the 6% MC level. Green and Kretschmann (1994) noted a similar response in other SP mechanical properties. The average ratio of the 5% diameter offset strength to three different offset values, 10%, 25%, and 50% for each nail size and MC are shown in Table 4. Results indicate that the 10%, 25%, and 50% offset values are generally greater than the 5% offset values. For all results, the 10% offset load is 3.8% greater, the 25% offset load is 6.4% greater, and the 50% offset load is 7.7% greater than the 5% offset load.

## Perpendicular-to-Grain Nail Bearing Specimens

Average and COV values for 20% to 40% of maximum load stiffness and 5% diameter offset strength for each species and nail size loaded perpendicular to grain are listed in Table 5. Stiffness increased with decreasing MC and was the most variable bearing property. The 5% diameter offset bearing strength values decreased with increasing MC, and

**Table 4—Parallel-to-grain nail bearing results**

| Species | Nail diameter (mm) | Moisture content | Stiffness | | Bearing strength | | Offset load ratios | | | Failure observations | |
|---|---|---|---|---|---|---|---|---|---|---|---|
| | | | Mean ($N/mm^3$) | COV (%) | Mean (MPa) | COV (%) | 10%/5% | 25%/5% | 50%/5% | Bearing | Splitting |
| Yellow-cedar | 4.11 | 6% | 156.5 | 21.4 | 56.84 | 15.6 | 1.000 | 0.993 | 1.029 | 8 | 25 |
| | | 12% | 152.2 | 26.5 | 42.38 | 15.4 | 1.026 | 1.035 | 1.060 | 28 | 6 |
| | | 17% | 106.0 | 29.8 | 31.01 | 14.5 | 1.050 | 1.087 | 1.111 | 30 | 4 |
| | | Saturated | 37.6 | 25.3 | 23.21 | 19.1 | 1.026 | 1.043 | 1.049 | 34 | 0 |
| Maple | 4.11 | 6% | 235.3 | 19.9 | 79.67 | 16.3 | 1.022 | 1.035 | 1.035 | 19 | 11 |
| | | 12% | 101.3 | 32.8 | 48.09 | 16.4 | 1.015 | 1.039 | 1.052 | 28 | 2 |
| | | 17% | 107.8 | 24.3 | 44.76 | 16.9 | 1.023 | 1.051 | 1.067 | 29 | 1 |
| | | Saturated | 50.4 | 33.3 | 31.02 | 14.7 | 1.077 | 1.085 | 1.085 | 31 | 0 |
| Southern Pine | 4.11 | 6% | 115.6 | 44.1 | 47.20 | 27.6 | 0.993 | 1.058 | 1.058 | 17 | 20 |
| | | 9% | 110.8 | 31.2 | 49.22 | 18.8 | 1.037 | 1.020 | 1.049 | 17 | 20 |
| | | 12% | 105.7 | 34.9 | 46.59 | 19.4 | 1.028 | 1.040 | 1.040 | — | — |
| | | 17% | 87.4 | 34.8 | 34.31 | 16.7 | 1.046 | 1.073 | 1.082 | 35 | 2 |
| | | Saturated | 36.9 | 40.8 | 24.50 | 16.5 | 1.033 | 1.043 | 1.056 | 37 | 0 |
| Spruce–Pine–Fir | 3.33 | 6% | 78.6 | 38.4 | 34.94 | 22.3 | 1.013 | 1.000 | 1.040 | 27 | 18 |
| | | 9% | 107.6 | 32.3 | 34.51 | 24.2 | 1.028 | 1.017 | 1.054 | 34 | 16 |
| | | 12% | 80.0 | 41.0 | 28.89 | 19.4 | 1.022 | 1.056 | 1.059 | 46 | 3 |
| | | 17% | 60.6 | 38.4 | 23.66 | 17.4 | 1.045 | 1.089 | 1.096 | 48 | 1 |
| | | Saturated | 27.2 | 53.3 | 16.10 | 25.3 | 1.037 | 1.078 | 1.085 | 49 | 0 |
| Spruce–Pine–Fir | 3.76 | 12% | 77.8 | 38.4 | 29.66 | 24.2 | 1.022 | 1.040 | 1.040 | 26 | 5 |
| Spruce–Pine–Fir | 4.11 | 6% | 71.0 | 44.8 | 32.61 | 30.2 | 1.030 | 1.072 | 1.103 | 17 | 32 |
| | | 9% | 85.9 | 48.0 | 32.62 | 26.5 | 1.035 | 1.028 | 1.059 | 29 | 19 |
| | | 12% | 72.7 | 40.8 | 27.68 | 26.0 | 1.055 | 1.055 | 1.055 | 35 | 14 |
| | | 17% | 52.5 | 37.2 | 22.54 | 22.0 | 1.054 | 1.106 | 1.111 | 46 | 4 |
| | | 19% | 53.2 | 43.5 | 22.30 | 20.7 | 1.065 | 1.109 | 1.124 | 48 | 2 |
| | | Saturated | 22.5 | 49.1 | 15.59 | 29.0 | 1.044 | 1.084 | 1.098 | 49 | 1 |
| Spruce–Pine–Fir | 5.76 | 6% | 76.4 | 42.1 | 30.91 | 30.7 | 1.074 | 1.133 | 1.140 | 11 | 28 |
| | | 9% | 60.8 | 49.0 | 30.34 | 23.0 | 1.072 | 1.102 | 1.133 | 25 | 22 |
| | | 12% | 75.8 | 29.6 | 31.95 | 19.0 | 1.049 | 1.086 | 1.091 | 41 | 6 |
| | | 17% | 54.9 | 39.8 | 18.42 | 21.2 | 1.093 | 1.173 | 1.176 | 46 | 1 |
| | | Saturated | 9.4 | 46.7 | 14.35 | 22.2 | 1.040 | 1.080 | 1.089 | 47 | 0 |

the COVs for these nails at these MC levels are within the range of Wilkinson's findings. Effect of MC on the perpendicular-to-grain 5% diameter offset bearing strength is shown in Figures 4b through 9b. In these figures, saturated specimen results are plotted at the moisture intersection point, $M_p$. Again, these figures show that, generally, perpendicular-to-grain nail bearing strength increases as the MC decreases. The average ratio of the 5% strength to three different offset values, 10%, 25%, and 50%, for each nail size and MC are shown in Table 4. Results indicate that the 10%, 25%, and 50% offset values are greater than the 5% offset values. For all the results, the 10% offset load is 12.0% greater, the 25% offset load is 26.6% greater, and the 50% offset load is 28.5% greater than the 5% offset load.

# Observations

## Failure Modes

Two failure modes were observed for specimens loaded parallel to grain (Fig. 10a,b), and two different failure modes were observed for specimens loaded perpendicular to grain (Fig. 10c,d). For parallel-to-grain loading, the predominant failure mode was localized crushing or bearing of the wood directly under the nail. This failure occurred in 78% of all parallel-to-grain tests. For the remaining specimens at failure, a split developed directly under the nail on one or both sides of the specimen. For all wood species, the occurrence of the splitting failure modes typically increased as the MC of the

**Table 5—Perpendicular-to-grain nail bearing results**

| Species | Nail diameter (mm) | Moisture content | Stiffness | | Bearing strength | | Offset load ratios | | | Failure observations | |
|---|---|---|---|---|---|---|---|---|---|---|---|
| | | | Mean (N/mm$^3$) | COV (%) | Mean (MPa) | COV (%) | 10%/5% | 25%/5% | 50%/5% | Bearing | Peeling |
| Yellow-cedar | 4.11 | 6% | 55.8 | 38.1 | 35.55 | 15.88 | 1.095 | 1.258 | 1.282 | 21 | 3 |
| | | 12% | 40.7 | 38.9 | 27.62 | 23.25 | 1.126 | 1.340 | 1.358 | 23 | 3 |
| | | 19% | 25.1 | 34.4 | 21.03 | 17.67 | 1.126 | 1.306 | 1.332 | 16 | 7 |
| | | Saturated | 10.9 | 30.2 | 14.49 | 27.7 | 1.103 | 1.216 | 1.218 | 23 | 1 |
| Maple | 4.11 | 6% | 109.2 | 29.1 | 60.08 | 19.0 | 1.131 | 1.379 | 1.410 | 25 | 4 |
| | | 12% | 76.7 | 35.0 | 46.99 | 20.4 | 1.131 | 1.380 | 1.426 | 26 | 4 |
| | | 19% | 57.3 | 34.2 | 39.43 | 20.0 | 1.127 | 1.343 | 1.370 | 28 | 1 |
| | | Saturated | 18.87 | 36.3 | 21.29 | 26.5 | 1.156 | 1.330 | 1.336 | 29 | 1 |
| Southern Pine | 4.11 | 6% | 47.3 | 19.3 | 49.90 | 19.9 | 1.121 | 1.222 | 1.247 | 30 | 7 |
| | | 9% | 53.2 | 21.7 | 45.36 | 16.9 | 1.114 | 1.251 | 1.259 | 29 | 8 |
| | | 12% | 47.8 | 21.3 | 40.08 | 17.0 | 1.125 | 1.317 | 1.382 | — | — |
| | | 17% | 24.8 | 28.6 | 26.39 | 17.0 | 1.135 | 1.263 | 1.266 | 37 | 0 |
| | | Saturated | 10.2 | 27.9 | 15.30 | 19.1 | 1.113 | 1.230 | 1.256 | 37 | 0 |
| Spruce–Pine–Fir | 3.33 | 6% | 36.6 | 47.0 | 23.70 | 34.6 | 1.133 | 1.275 | 1.295 | 48 | 1 |
| | | 9% | 37.2 | 42.8 | 24.33 | 29.6 | 1.096 | 1.234 | 1.252 | 44 | 6 |
| | | 12% | 32.0 | 43.8 | 21.61 | 26.5 | 1.124 | 1.263 | 1.270 | 44 | 4 |
| | | 17% | 19.7 | 38.5 | 17.51 | 25.9 | 1.141 | 1.325 | 1.329 | 41 | 7 |
| | | Saturated | 7.2 | 34.0 | 11.21 | 30.3 | 1.163 | 1.360 | 1.395 | 37 | 11 |
| Spruce–Pine–Fir | 3.76 | 12% | 29.8 | 39.0 | 20.80 | 22.4 | 1.109 | 1.239 | 1.236 | 41 | 5 |
| Spruce–Pine–Fir | 4.11 | 6% | 28.1 | 40.6 | 22.68 | 30.6 | 1.119 | 1.261 | 1.295 | 45 | 4 |
| | | 9% | 30.6 | 43.6 | 22.45 | 27.5 | 1.102 | 1.248 | 1.255 | 45 | 4 |
| | | 12% | 25.3 | 42.2 | 20.45 | 26.8 | 1.119 | 1.247 | 1.268 | 38 | 11 |
| | | 17% | 17.2 | 43.1 | 16.19 | 26.5 | 1.119 | 1.225 | 1.228 | 34 | 16 |
| | | 19% | 14.9 | 33.1 | 15.51 | 24.3 | 1.116 | 1.204 | 1.211 | 21 | 29 |
| | | Saturated | 5.6 | 28.3 | 8.71 | 32.1 | 1.166 | 1.332 | 1.370 | 39 | 10 |
| Spruce–Pine–Fir | 5.76 | 6% | 25.5 | 41.8 | 22.39 | 24.7 | 1.081 | 1.178 | 1.185 | 23 | 21 |
| | | 9% | 23.2 | 47.3 | 20.44 | 25.6 | 1.087 | 1.178 | 1.182 | 20 | 27 |
| | | 12% | 21.2 | 40.6 | 18.82 | 21.3 | 1.065 | 1.119 | 1.145 | 23 | 23 |
| | | 17% | 13.2 | 32.4 | 13.13 | 21.4 | 1.129 | 1.210 | 1.216 | 24 | 22 |
| | | Saturated | 4.3 | 34.4 | 6.95 | 27.6 | 1.128 | 1.251 | 1.265 | 34 | 12 |

specimens changed from saturated to 6% with the greatest occurrence at the 6% MC level. The number of bearing and splitting type failures for a given species, nail diameter, and MC are listed in Table 4.

For perpendicular-to-gain loading, the predominant failure mode was localized crushing of the wood fibers directly under the nail (Fig. 10c). This failure mode occurred in 79% of all the perpendicular-to-grain tests. Remaining specimens failed by the development of a split from either side or both sides of the specimens at roughly the same level as the bottom of the nail (Fig. 10d). The occurrence of the splitting failure increased as the MC decreased for the YC, M, and SP specimens but was different for the SPF specimens. For SPF specimens with 3.33- and 4.11-mm nails, the incidence of splitting increased with increased moisture levels and was nearly constant for SPF specimens tested with a 5.76-mm nail. The number of bearing and splitting type failures for a given species, nail diameter, and MC are listed in Table 5.

## Load–Deformation Curves

Representative load versus head displacement curves are plotted at 6%, 12%, and saturated MC conditions for parallel- and perpendicular-to-grain loading with a 4.11-mm nail of matched SPF specimens (Fig. 11). The 5% diameter offset lines are plotted on the curves to give a reference point for further discussion. Splitting and peeling failure responses are

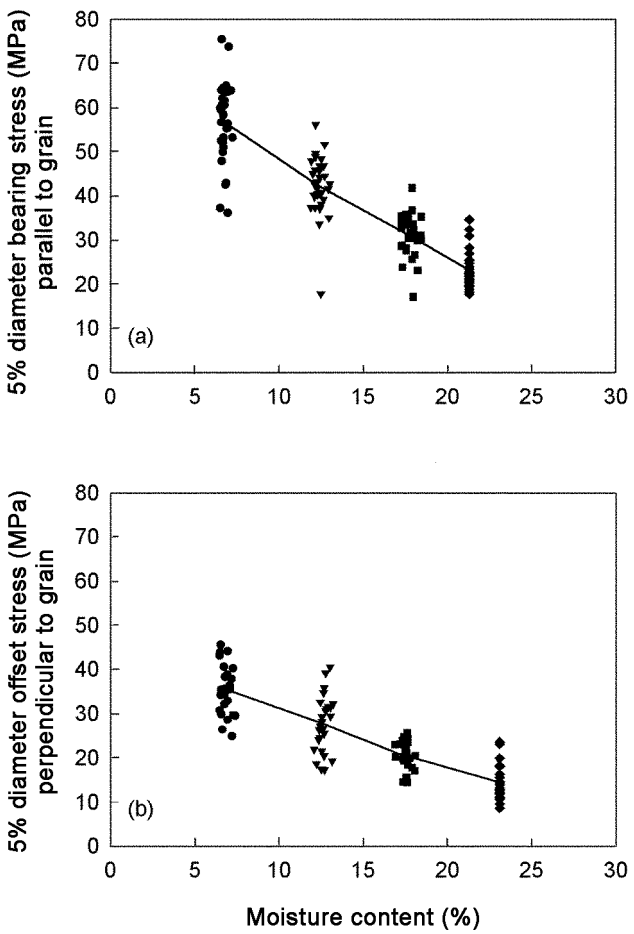


**Figure 4—Effect of moisture content on the (a) parallel- and (b) perpendicular-to-grain 5% nail bearing strength of yellow-cedar using a 4.11-mm nail.**

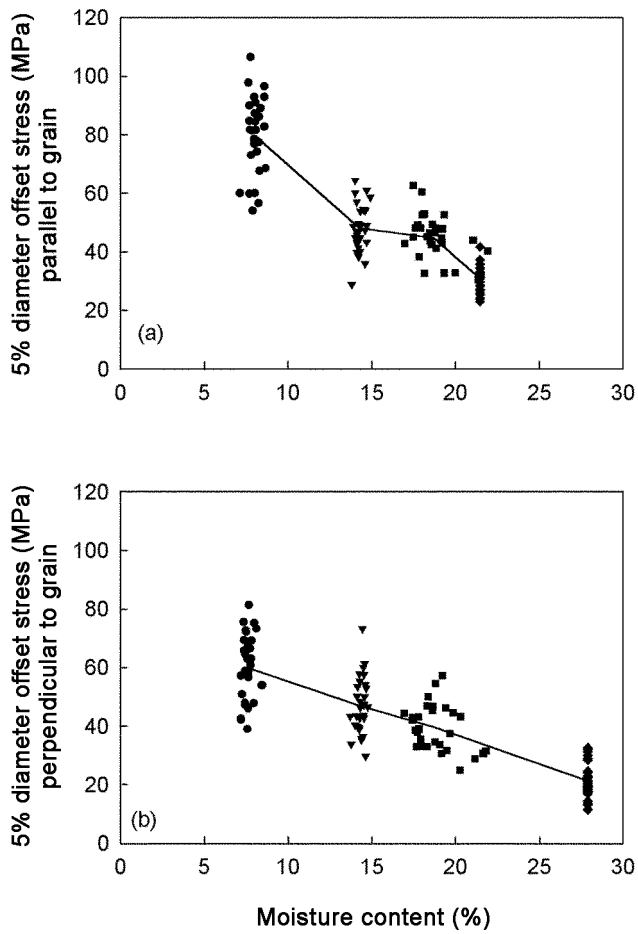


**Figure 5—Effect of moisture content on the (a) parallel- and (b) perpendicular-to-grain 5% nail bearing strength of maple using a 4.11-mm nail.**

noted on Figure 11a for the 6% MC condition specimens because the occurrence of this type of failure was greatest at the lower moisture conditions. Bearing type failure response, which occurred in 79% of all tests, is shown in Figure 11b and 11c. All figures indicate that parallel-to-grain specimens typically had a substantial region of nearly constant load with increasing deformation, with the 5% offset line regularly intersecting the curve in this region. Therefore, differences between the 5% offset line and other offset levels are relatively small. Ratios listed in Table 4 indicate that the average difference between the 5% and 50% offset loads is 7.7% for all specimens with a maximum difference of 17.6% for 5.76-mm-diameter nails in saturated SPF.

Perpendicular-to-grain loaded specimens have a load versus head deformation curve that typically monotonically increases until the testing is concluded by a deflection limit or the load-head touching the specimen. When a splitting failure occurred, the specimen still had the ability to sustain higher load. It is hypothesized that the measured deformation is largely comprised of the axial response of the wood specimen and that the actual embedment of the nail into the wood is significantly smaller. Since the load is always increasing during the test, ratios of the 5% offset load to other offset loads increase as the percentage offset increases. Ratios listed in Table 5 indicate that the average difference between the perpendicular-to-grain 5% and 50% offset loads is 28.5% for all specimens with a maximum difference of 42.6% for 4.11-mm-diameter nails in M at 12% MC.

# Discussion and Comparisons

## Effect of Grain Orientation

The number of replicates allowed for a statistical comparison of the effect of grain orientation on 20% to 40% stiffness and nail bearing strength. For each wood species at each MC level and nail diameter, *t*-tests, at 0.05 level of significance were performed. Comparisons indicated that grain orientation has a statistically significant effect on stiffness for all considered combinations and has a statistically significant effect on nail bearing strength except for 12% MC M, 6% SP, and 9%

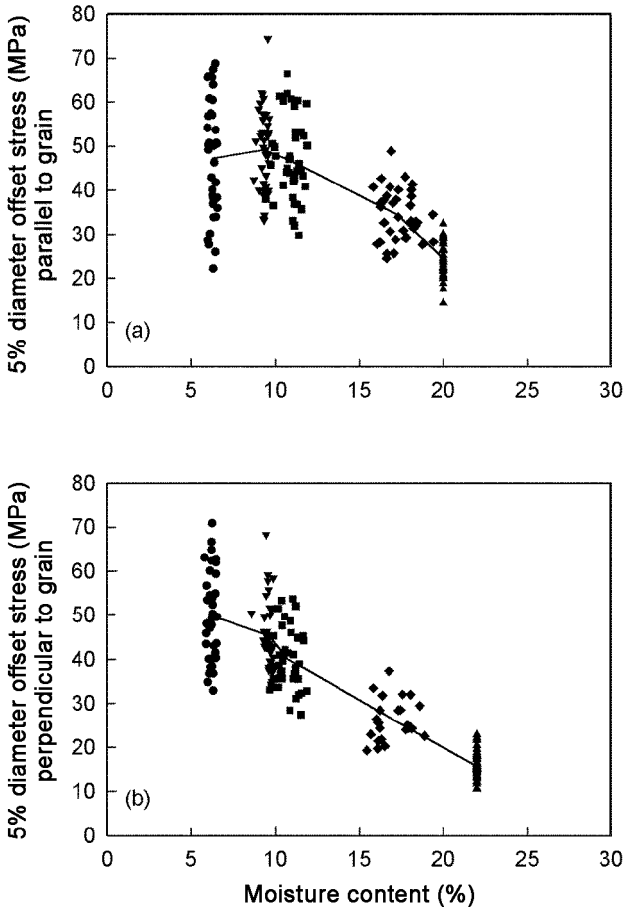


**Figure 6—Effect of moisture content on the (a) parallel- and (b) perpendicular-to-grain 5% nail bearing strength of Southern Pine using a 4.11-mm nail.**

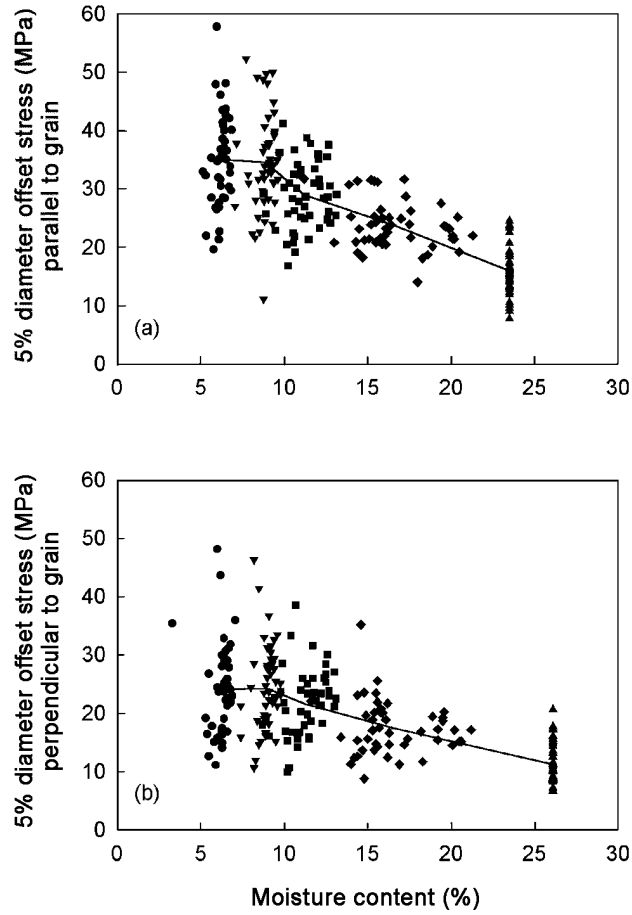


**Figure 7—Effect of moisture content on the (a) parallel- and (b) perpendicular-to-grain 5% nail bearing strength of Spruce–Pine–Fir using a 3.33-mm nail.**

SP comparisons (Tables 6 and 7). Ratios of the parallel and perpendicular stiffness and bearing strength were calculated (Tables 6 and 7). Stiffness ratios are highly variable, but with some exception, the ratio decreased as the MC levels went from saturated to 6%. Strength ratios were also variable, but the average value for each MC level 17% and lower ranged between 1.34 and 1.36. These average ratios included ratios that were statistically insignificant. The average strength ratio for saturated specimens was 1.66. In general, except for three cases, both the stiffness and bearing strength parallel-to-grain values were greater than matched perpendicular specimens.

## Effect of Nail Diameter

For the SPF grouping, three different nail diameters were tested at each MC to determine if the nail diameter had a significant affect on stiffness or bearing strength. An analysis of variance (ANOVA) was conducted using a 0.05 level of significance and Tukey's studentized test for multiple comparisons. Table 8 summarizes the ANOVA results for both stiffness and nail bearing strength for each MC tested. Numbers in the table represent the average stiffness or nail bearing strength values. A common underline under adjacent values indicates there is no significant difference between the values at a 0.05 level of significance. A common underline under three values indicates no significant difference between all three values. Stiffness results for tested nails in SPF were similar for at least two nail diameters at all moisture conditions but two. Parallel-to-grain stiffness was similar in most cases except one, but this was not the case for perpendicular-to-grain stiffness. Although some values were similar, the 3.33-mm nail stiffness was always greater than the 4.11-mm nail values. Also, the 4.11-mm nail stiffness was always greater than the 5.76-mm nail stiffness. Bearing strength results were similar at each MC for a least two nail diameters, except one — the perpendicular-to-grain loading of saturated specimen. In all cases, the 3.33- and 4.11-mm-diameter nails (a 0.78-mm-diameter difference) gave similar results. Differences were only noticed between the 5.76-mm-diameter nail and the other nail diameters, which differed in diameter by a minimum of 1.65 mm. This indicates that the number of replicates was not great enough to significantly

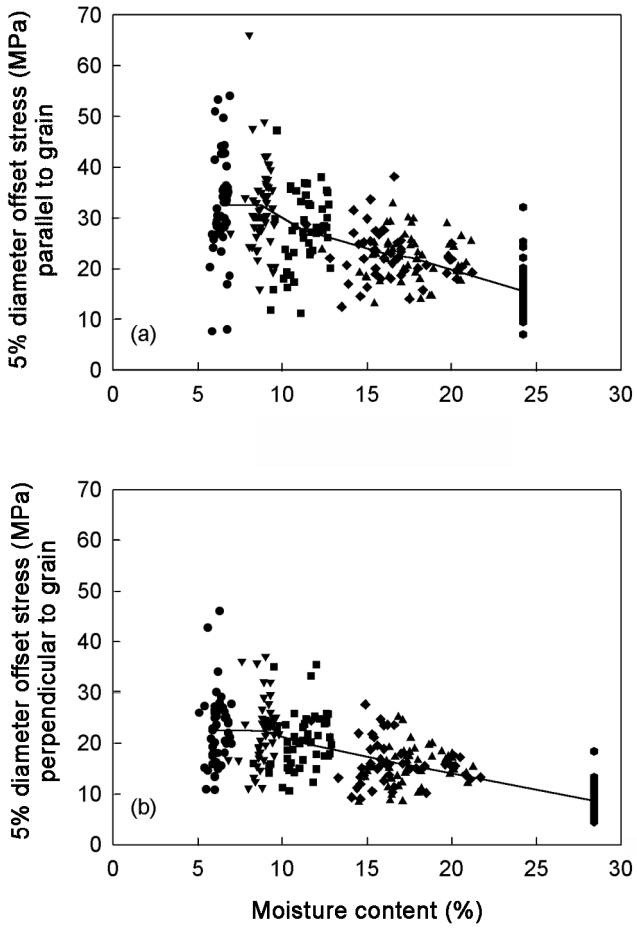


**Figure 8—Effect of moisture content on the (a) parallel- and (b) perpendicular-to-grain 5% nail bearing strength of Spruce–Pine–Fir using a 4.11-mm nail.**

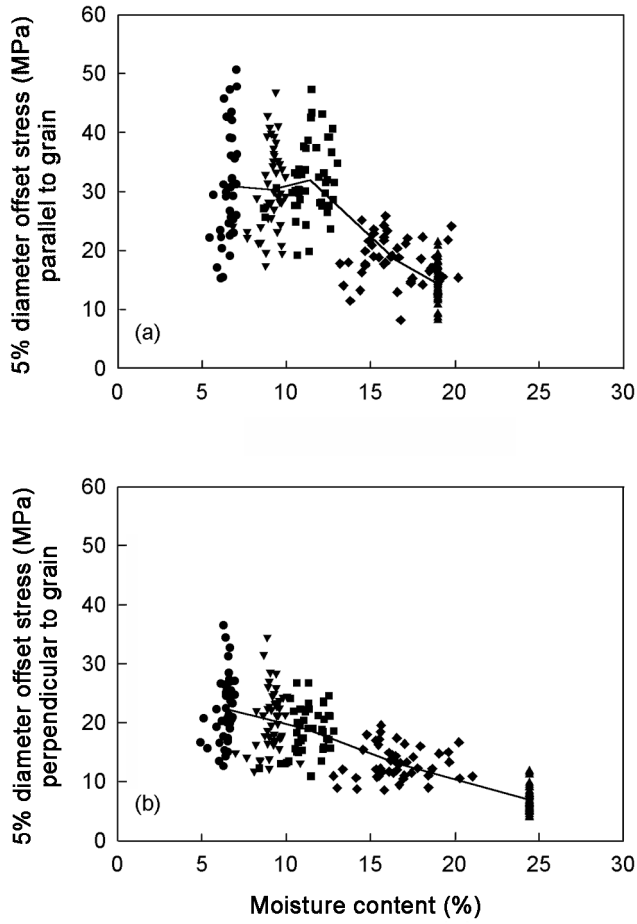


**Figure 9—Effect of moisture content on the (a) parallel- and (b) perpendicular-to-grain 5% nail bearing strength of Spruce–Pine–Fir using a 5.76-mm nail.**

distinguish the difference between the 3.33- and 4.11-mm-diameter nail bearing strength results. The ANOVA results did not conclusively determine that all nail diameters had a significant effect on nail bearing strength, but average values decreased as the nail diameter increased. For all specimens, the 3.33- and 4.11-mm nail bearing values were 19% and 10%, respectively, higher than the 5.76-mm nail results.

## Effect of Moisture Content

As shown in Figures 4 to 9, nail bearing strength generally increases with decreasing MC. To determine the moisture relationship for nail bearing stiffness, each data set for a given nail diameter and species was adjusted to a common specific gravity. The common value was the average specific gravity for a given diameter and species. Data were adjusted to this common value by conducting a linear regression of the data at each MC and using this relationship to adjust the data to the common specific gravity for the set.

With this adjusted nail bearing stiffness data, linear and quadratic polynomials were fitted to data with a MC of 17% and lower. Intersection MC, $M_p$, values were found by substituting the average saturated nail bearing stiffness into the visually best-fitting expression. Final MC–nail bearing stiffness relationships were determined by refitting the polynomial expressions to all the data after shifting the saturated data set to the intersection MC. The criteria to determine which polynomial best represented the interaction were based on both the coefficient of determination and a visual interpretation of the curves plotted on the data. A linear expression was preferred because it would be simpler to implement into current practice. Table 9 lists the coefficients for the best-fit MC–nail bearing stiffness expression, $r^2$, and moisture intersection for each species and grain orientation. For the SPF grouping, an expression was developed for the pooled nail sizes in the parallel and perpendicular grain directions. In all cases, MC was negatively correlated with stiffness.

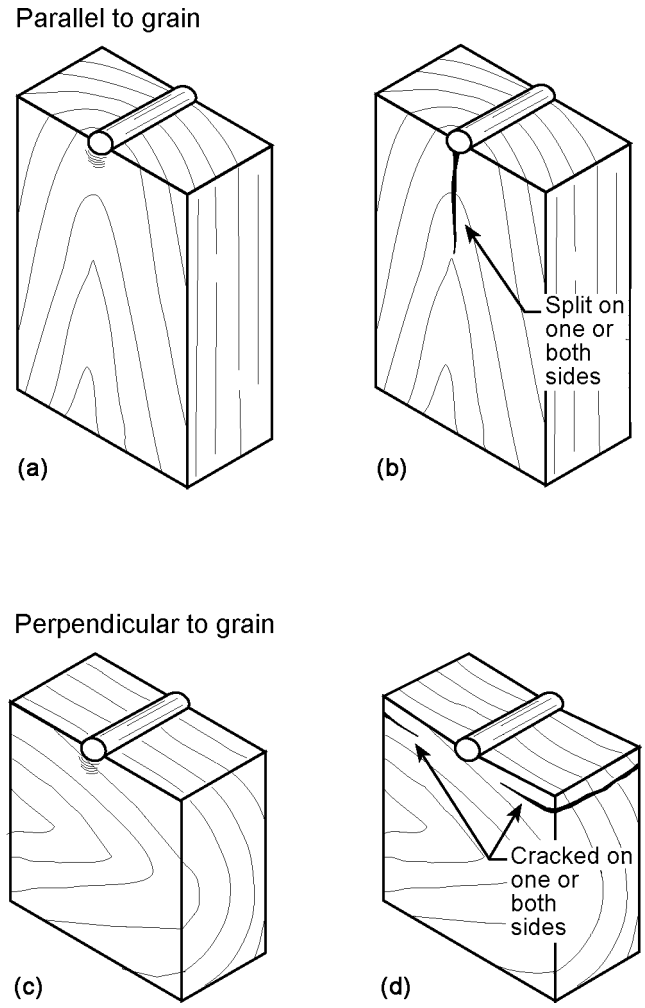


**Figure 10—Failure modes parallel to grain (a) bearing and (b) splitting, and perpendicular to grain (c) bearing and (d) peeling.**

A similar technique was used to determine the effect of MC on nail bearing strength for each material species. Table 10 lists the coefficient for the best-fit MC–nail bearing strength expression, $r^2$, and moisture intersection for each species and grain orientation. For the SPF grouping, an expression was developed for the pooled nail sizes in the parallel and perpendicular grain direction. In all cases, MC was negatively correlated with nail bearing.

Calculated $M_p$ values (Tables 9 and 10) for the different species are in line with Wilson's (1932) published values for mechanical properties, 21% for Southern Pine, 24% for red pine, and 27% for Sitka spruce. The last two species are included in the SPF species grouping.

## Probability Distributions

As the wood building design community moves toward a load and resistance design philosophy, underlying strength

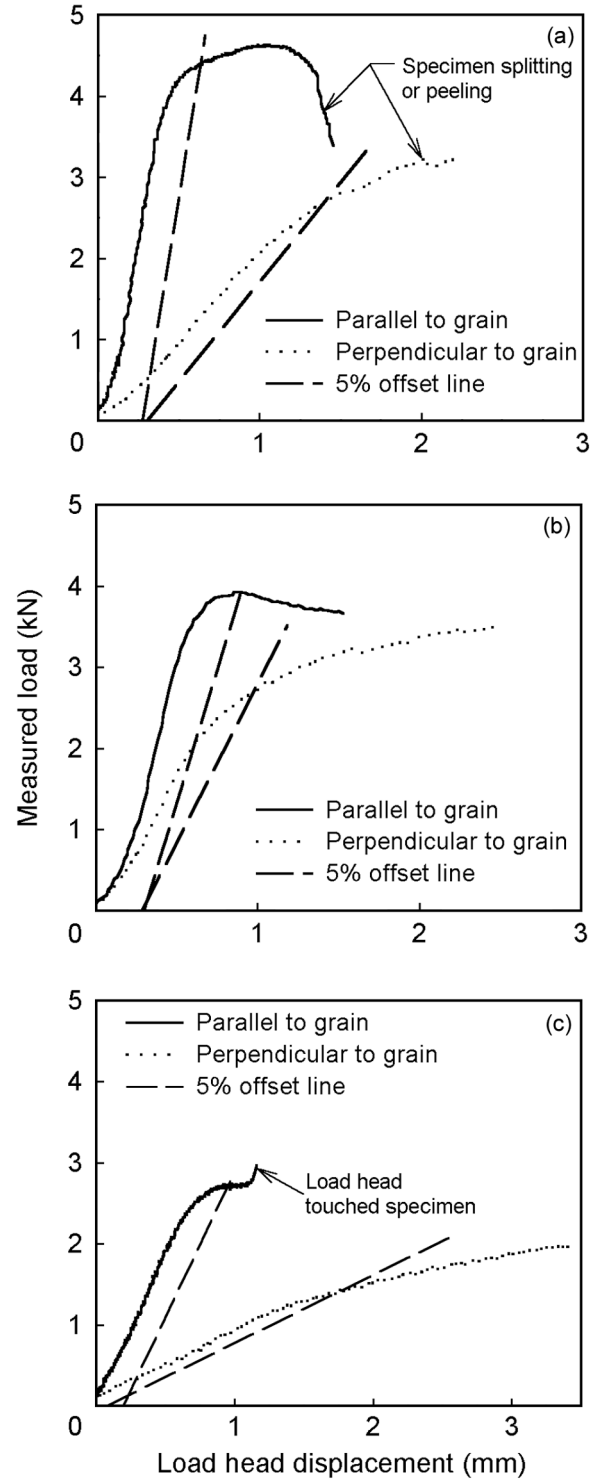


**Figure 11—Representative load versus head deformation curves for (a) 6% moisture content, (b) 12% moisture content, and (c) saturated moisture condition.**

**Table 6—Statistical comparision of the effect of grain orientation on nail bearing stiffness**

| Species | Diameter (mm) | *t*-tests for each moisture content[a] | | | | | Ratio for each moisture content | | | | |
|---|---|---|---|---|---|---|---|---|---|---|---|
| | | 6% | 9% | 12% | 17% | Sat. | 6% | 9% | 12% | 17% | Sat. |
| Yellow-cedar | 4.1 | Yes | — | Yes | Yes | Yes | 2.80 | — | 3.74 | 4.22 | 3.45 |
| Maple | 4.1 | Yes | — | Yes | Yes | Yes | 2.15 | — | 1.32 | 1.88 | 2.67 |
| Southern Pine | 4.1 | Yes | Yes | Yes | Yes | Yes | 2.17 | 2.32 | 2.24 | 3.53 | 3.64 |
| Spruce–Pine–Fir | 3.3 | Yes | Yes | Yes | Yes | Yes | 2.15 | 2.89 | 2.49 | 3.08 | 3.80 |
| Spruce–Pine–Fir | 4.1 | Yes | Yes | Yes | Yes | Yes | 2.52 | 2.81 | 2.87 | 3.06 | 4.01 |
| Spruce–Pine–Fir | 5.7 | Yes | Yes | Yes | Yes | Yes | 3.01 | 2.62 | 3.57 | 4.15 | 2.17 |

[a] Yes indicates a statistically significant difference between the means at a 0.05 level of confidence.

**Table 7—Statistical comparision of the effect of grain orientation on nail bearing strength**

| Species | Diameter (mm) | *t*-tests for each moisture content[a] | | | | | Ratio for each moisture content | | | | |
|---|---|---|---|---|---|---|---|---|---|---|---|
| | | 6% | 9% | 12% | 17% | Sat. | 6% | 9% | 12% | 17% | Sat. |
| Yellow-cedar | 4.1 | Yes | — | Yes | Yes | Yes | 1.60 | — | 1.53 | 1.47 | 1.60 |
| Maple | 4.1 | Yes | — | No | Yes | Yes | 1.33 | — | 1.02 | 1.14 | 1.46 |
| Southern Pine | 4.1 | No | No | Yes | Yes | Yes | 0.95 | 1.09 | 1.16 | 1.30 | 1.60 |
| Spruce–Pine–Fir | 3.3 | Yes | Yes | Yes | Yes | Yes | 1.47 | 1.42 | 1.34 | 1.35 | 1.44 |
| Spruce–Pine–Fir | 4.1 | Yes | Yes | Yes | Yes | Yes | 1.44 | 1.45 | 1.35 | 1.39 | 1.79 |
| Spruce–Pine–Fir | 5.7 | Yes | Yes | Yes | Yes | Yes | 1.38 | 1.48 | 1.70 | 1.40 | 2.06 |

[a] Yes indicates a statistically significant difference between the means at a 0.05 level of confidence.

**Table 8—ANOVA statistical comparision of the effect of nail diameter on nail bearing stiffness and strength for SPF**

| Grain orientation | Moisture content | Mean stiffness values for each nail diameter ($N/mm^3$) | | | Mean 5% diameter offset strength for each nail diameter (MPa) | | |
|---|---|---|---|---|---|---|---|
| | | 3.33-mm | 4.11-mm | 5.76-mm | 3.33-mm | 4.11-mm | 5.76-mm |
| Parallel | 6% | 78.6 | 71.0 | 76.4 | 34.94 | 32.61 | 30.91 |
| | 9% | 107.6 | 85.9 | 60.8 | 34.51 | 32.62 | 30.34 |
| | 12% | 80.0 | 72.7 | 75.8 | 28.89 | 27.68 | 31.95 |
| | 17% | 60.6 | 52.5 | 54.9 | 23.66 | 22.54 | 18.42 |
| | Saturated | 27.2 | 22.5 | 9.4 | 16.10 | 15.59 | 14.35 |
| Perpendicular | 6% | 36.6 | 28.1 | 25.5 | 23.70 | 22.68 | 22.39 |
| | 9% | 37.2 | 30.6 | 23.2 | 24.33 | 22.45 | 20.44 |
| | 12% | 32.0 | 25.3 | 21.2 | 21.61 | 20.45 | 18.82 |
| | 17% | 19.7 | 17.2 | 13.2 | 17.51 | 16.19 | 13.13 |
| | Saturated | 7.2 | 5.6 | 4.3 | 11.21 | 8.71 | 6.95 |

**Table 9—Equations fit to stiffness and moisture content levels to determine $M_p$**

| Species | Grain orientation | Nail diameter (mm) | $P = A(MC)^2 + B(MC) + C$ (N/mm$^3$)[a] | | | $r^2$ | Moisture intersection $M_p$ |
|---|---|---|---|---|---|---|---|
| | | | A | B | C | | |
| Yellow-cedar | Parallel | 4.11 | 99.2 | 1,341.6 | –7,324.1 | 0.73 | 22.1 |
| | Perpendicular | 4.11 | 76.0 | –289.9 | — | 0.60 | 22.5 |
| Maple | Parallel | 4.11 | 459.2 | –3,459.4 | 7,577.2 | 0.77 | 21.6 |
| | Perpendicular | 4.11 | 142.5 | –450.9 | — | 0.66 | 27.4 |
| Southern Pine | Parallel | 4.11 | 121.8 | –40.17 | –910.2 | 0.40 | 28.4 |
| | Perpendicular | 4.11 | 48.7 | 186.1 | –1,928.7 | 0.83 | 19.7 |
| Spruce–Pine–Fir | Parallel | 3.33 | 61.8 | 667.2 | –3,886.0 | 0.48 | 21.3 |
| | Perpendicular | 3.33 | 49.8 | –172.7 | — | 0.63 | 24.7 |
| | Parallel | 4.11 | 64.6 | 311.4 | –2,106.1 | 0.39 | 23.3 |
| | Perpendicular | 4.11 | 38.3 | –124.7 | — | 0.68 | 26.2 |
| | Parallel | 5.76 | 70.5 | 110.1 | –1,176.4 | 0.54 | 27.9 |
| | Perpendicular | 5.76 | 32.5 | –108.5 | — | 0.60 | 25.9 |
| | Parallel | All sizes | 67.5 | 336.6 | –2,317.3 | 0.45 | 23.3 |
| | Perpendicular | All sizes | 40.6 | –137.6 | — | 0.57 | 25.3 |

[a] $P$ = 20% to 40% of maximum load nail bearing stiffness (in N/mm$^3$).

**Table 10—Equations fit to 5% diameter offset dowel bearing strength and moisture content levels to determine $M_p$**

| Species | Grain orientation | Nail diameter (mm) | $P = A(MC)^2 + B(MC) + C$ (MPa)[a] | | | $r^2$ | Moisture intersection $M_p$ |
|---|---|---|---|---|---|---|---|
| | | | A | B | C | | |
| Yellow-cedar | Parallel | 4.11 | 72.31 | –232.93 | — | 0.89 | 21.3 |
| | Perpendicular | 4.11 | 43.41 | –125.29 | — | 0.79 | 23.1 |
| Maple | Parallel | 4.11 | 131.94 | –789.79 | 1,559.60 | 0.86 | 21.5 |
| | Perpendicular | 4.11 | 74.03 | –189.48 | — | 0.81 | 27.9 |
| Southern Pine | Parallel | 4.11 | 36.31 | 292.77 | –1,755.94 | 0.61 | 20.0 |
| | Perpendicular | 4.11 | 64.10 | –218.91 | — | 0.87 | 22.0 |
| Spruce–Pine–Fir | Parallel | 3.33 | 42.92 | –115.00 | — | 0.74 | 23.5 |
| | Perpendicular | 3.33 | 28.97 | –67.47 | — | 0.75 | 26.1 |
| | Parallel | 4.11 | 39.57 | –99.29 | — | 0.55 | 24.2 |
| | Perpendicular | 4.11 | 27.23 | –65.20 | — | 0.81 | 28.4 |
| | Parallel | 5.76 | 22.69 | 218.89 | –1,390.10 | 0.65 | 19.0 |
| | Perpendicular | 5.76 | 27.91 | –85.54 | — | 0.86 | 24.4 |
| | Parallel | All sizes | 41.20 | –110.94 | — | 0.62 | 23.4 |
| | Perpendicular | All sizes | 29.92 | –71.19 | — | 0.76 | 26.5 |

[a] $P$ = 5% diameter offset nail bearing strength (in MPa).

distributions will need to be quantified. Since the SP and SPF grouping had a minimum of 37 specimens, an analysis of both the 5% diameter offset strength distributions was warranted. Maximum likelihood estimators examined three types of distributions: normal, lognormal, and two-parameter Weibull. These distributions were chosen because they are typically used to classify mechanical response in wood and wood-based materials. Chi-squared ($\chi^2$), Anderson–Darling (A–D), and Kolmogorov–Smirnov (K–S) tests were performed to evaluate the goodness of fit of these distributions to the data. All distribution parameters found by the likelihood estimators along with the goodness of fit estimates are listed in Table 11 for parallel-to-grain results and Table 12 for perpendicular-to-grain results. Based on goodness of fit comparisons, the best-fit distribution for each size nail is shown by the footnote in Tables 11 and 12. For parallel-to-grain bearing strength, the normal distribution best-fit 13 of the 19 combinations, and for the perpendicular-to-grain bearing strength, no distribution predominantly fit the data.

## Specific Gravity–Nail Bearing Strength Relationship

For clear wood mechanical properties, there is typically a strong correlation to specific gravity. This is also true for both dowel bearing stiffness and strength (Wilkinson 1991, Koponen 1991, Smith and others 1988). Linear relationships were developed at 6%, 12%, 15%, and saturated moisture conditions for the 4.11-mm nail diameter data. Moisture conditions represented extreme conditions (6% and saturated), typical testing conditions (12%), and the design standard for dry lumber (15%).

Prior to regression analysis, both nail stiffness and bearing strength results were adjusted to the four moisture conditions, 6%, 12%, 15%, and saturated, using expressions listed in Tables 9 and 10. Linear regressions were developed at each of the four moisture levels for parallel to grain, perpendicular to grain, and a combined set considering both orientations. Linear expressions relating specific gravity and nail bearing stiffness, $r^2$, mean deviation, and standard error are listed in Table 13. These linear type expressions fit the perpendicular-to-grain results best. For the other two sets, parallel to grain and combined, the $r^2$ values indicate a weak to no linear correlation between specific gravity and nail bearing stiffness. Linear expressions relating specific gravity and nail bearing strength, $r^2$, mean deviation, and standard error are listed in Table 14. Linear expression fit all parallel, perpendicular, and combined data well. As with the stiffness results, linear expression tends to fit perpendicular-to-grain better than the other sets. Tables 13 and 14 indicate that the effect of specific gravity decreases as the MC approaches a saturated condition and that specific gravity is positively correlated with both nail bearing stiffness and strength.

To investigate if Wilkinson's specific gravity–nail bearing relationship was affected by the lower MC specimens, it was compared with a relationship developed in the study. Figure 12 compares bearing strengths of both the experimental parallel (solid symbols) and perpendicular (open symbols) to grain results with specific gravity. The results in Figure 12 are experimental bearing strengths from 4.11-mm-diameter nails adjusted to 12% MC by expressions in Table 10. Also compared are the equations by Wilkinson and from Table 14 for 12% MC using the combined data. Across the entire specific gravity range, parallel-to-grain strengths are higher than the perpendicular-to-grain values as confirmed by a statistical comparison for each species. The fitted expression predicts the middle response of the data, as determined by a residual analysis, with a range of percentage deviation (PD) of the fitted expression and experimental values of 88.3% to –51.9% with an average PD of –0.02. For Wilkinson's expression, the range of PD was 81.6% to –52.7% with an average of –0.73. Based on PD and an analysis of the actual residuals, Wilkinson's expression overpredicts nail bearing strengths for higher specific gravity values. Percentage difference between Wilkinson's expression and the 12% MC combined expression in Table 14 as it varies with specific gravity is also shown in Figure 12. At a specific gravity of 0.48, both expressions are equivalent, but for values lower than 0.39 and higher than 0.6, the expressions differ by greater than 10%. For typical wood species used in construction, the difference between the best-fit and Wilkinson's is less than 10%.

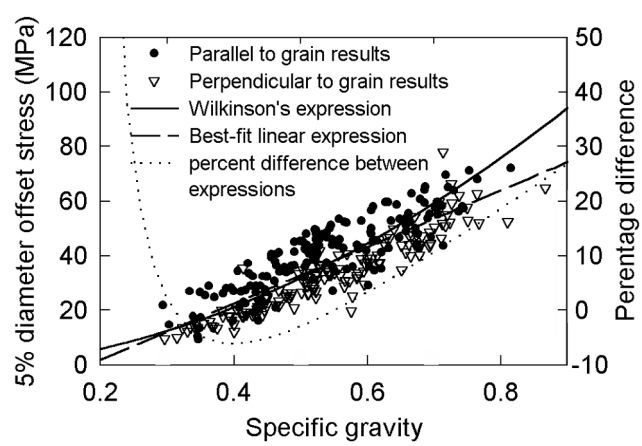


**Figure 12—Nail bearing versus specific gravity for 4.11-mm nails at 12% MC (Filled symbols are parallel-to-grain strengths, open symbols are perpendicular-to-grain strengths).**

**Table 11—Parallel-to-grain 5% diameter offset strength probability distributions**

| Species | Nail diameter | Moisture content | Distribution[a] | Scale (α) | Shape(β) | $\chi^2$ | K-S | A-D |
|---|---|---|---|---|---|---|---|---|
| Southern Pine | 4.11 | 6% | Normal[b] | 47.01 | 165.78 | 5.945 | 0.1063 | 0.4425 |
| | | | Lognormal | 3.809 | 0.08732 | 5.946 | 0.1546 | 0.5958 |
| | | | Weibull | 51.86 | 4.180 | 6.324 | 0.1009 | 0.4205 |
| | | 9% | Norma[b] | 49.32 | 83.30 | 4.432 | 0.0867 | 0.2976 |
| | | | Lognormal | 3.881 | 0.03500 | 4.432 | 0.0971 | 0.3902 |
| | | | Weibull | 53.14 | 5.701 | 7.459 | 0.0771 | 0.3624 |
| | | 12% | Normal | 45.52 | 79.50 | 4.814 | 0.1100 | 0.6433 |
| | | | Lognormal[b] | 3.799 | 0.03863 | 5.930 | 0.0946 | 0.4182 |
| | | | Weibull | 49.23 | 5.481 | 10.767 | 0.1335 | 0.8715 |
| | | 17% | Normal[b] | 35.58 | 36.97 | 2.162 | 0.0808 | 0.2619 |
| | | | Lognormal | 3.556 | 0.03192 | 5.568 | 0.1163 | 0.5470 |
| | | | Weibull | 38.12 | 6.624 | 2.919 | 0.1029 | 0.2169 |
| | | Saturated | Normal[b] | 24.50 | 15.79 | 3.676 | 0.1010 | 0.2952 |
| | | | Lognormal | 3.185 | 0.02918 | 1.027 | 0.1176 | 0.3882 |
| | | | Weibull | 26.17 | 7.104 | 4.432 | 0.1065 | 0.3244 |
| Spruce–Pine–Fir | 3.33 | 6% | Normal[b] | 35.21 | 61.76 | 5.600 | 0.0597 | 0.1488 |
| | | | Lognormal | 3.535 | 0.05327 | 4.000 | 0.0970 | 0.3182 |
| | | | Weibull | 38.33 | 4.763 | 2.800 | 0.0742 | 0.2843 |
| | | 9% | Normal[b] | 34.36 | 70.60 | 4.000 | 0.0702 | 0.3377 |
| | | | Lognormal | 3.503 | 0.07608 | 6.400 | 0.1189 | 0.6806 |
| | | | Weibull | 37.56 | 4.533 | 4.800 | 0.0863 | 0.4938 |
| | | 12% | Normal[b] | 28.02 | 33.97 | 8.122 | 0.0630 | 0.1751 |
| | | | Lognormal | 3.310 | 0.04845 | 7.755 | 0.0879 | 0.4046 |
| | | | Weibull | 30.38 | 5.470 | 2.612 | 0.0729 | 0.1969 |
| | | 17% | Normal[b] | 23.30 | 17.25 | 3.347 | 0.0614 | 0.2655 |
| | | | Lognormal | 3.132 | 0.03381 | 3.347 | 0.0804 | 0.3630 |
| | | | Weibull | 25.04 | 6.306 | 2.612 | 0.0730 | 0.3248 |
| | | Saturated | Normal[b] | 16.10 | 16.28 | 7.755 | 0.1240 | 0.5421 |
| | | | Lognormal | 2.746 | 0.06712 | 3.347 | 0.0771 | 0.3483 |
| | | | Weibull | 17.66 | 4.310 | 9.224 | 0.1386 | 0.7149 |
| Spruce–Pine–Fir | 4.11 | 6% | Normal[b] | 33.04 | 96.14 | 18.408 | 0.1192 | 0.5031 |
| | | | Lognormal | 3.441 | 0.13850 | 16.939 | 0.1710 | 1.7811 |
| | | | Weibull | 36.50 | 3.705 | 16.939 | 0.1255 | 0.6268 |
| | | 9% | Normal | 32.38 | 73.73 | 1.875 | 0.0972 | 0.4371 |
| | | | Lognormal[b] | 3.444 | 0.06746 | 4.125 | 0.0733 | 0.2986 |
| | | | Weibull | 35.63 | 3.727 | 6.750 | 0.1208 | 0.9152 |
| | | 12% | Normal | 26.88 | 56.48 | 8.250 | 0.1076 | 0.4402 |
| | | | Lognormal | 3.244 | 0.10820 | 14.250 | 0.1707 | 1.486 |
| | | | Weibull[b] | 29.62 | 4.100 | 10.125 | 0.0975 | 0.3734 |
| | | 17% | Normal[b] | 22.11 | 24.38 | 7.600 | 0.0982 | 0.5497 |
| | | | Lognormal | 3.068 | 0.05960 | 10.00 | 0.1455 | 1.205 |
| | | | Weibull | 24.04 | 4.726 | 7.200 | 0.1028 | 0.7689 |
| | | Saturated | Normal | 15.59 | 20.09 | 5.600 | 0.0826 | 0.6376 |
| | | | Lognormal[b] | 2.708 | 0.07719 | 3.600 | 0.0729 | 0.2434 |
| | | | Weibull | 17.25 | 3.485 | 8.400 | 0.1064 | 0.9713 |
| Spruce–Pine–Fir | 5.76 | 6% | Normal | 30.67 | 86.29 | 8.205 | 0.1128 | 0.5229 |
| | | | Lognormal[b] | 3.376 | 0.09688 | 3.538 | 0.0781 | 0.2966 |
| | | | Weibull | 34.06 | 3.603 | 6.769 | 0.1196 | 0.4927 |
| | | 9% | Normal | 30.43 | 48.13 | 4.894 | 0.0951 | 0.3193 |
| | | | Lognormal[b] | 3.389 | 0.05429 | 7.957 | 0.0753 | 0.3063 |
| | | | Weibull | 33.19 | 4.792 | 8.723 | 0.1108 | 0.3647 |
| | | 12% | Normal | 31.49 | 39.74 | 7.191 | 0.1192 | 0.6007 |
| | | | Lognormal | 3.429 | 0.04117 | 13.702 | 0.0834 | 0.3845 |
| | | | Weibull | 34.10 | 5.304 | 12.553 | 0.8741 | 0.1446 |
| | | 17% | Normal[b] | 17.42 | 27.63 | 6.043 | 0.0881 | 0.4222 |
| | | | Lognormal | 2.800 | 0.13473 | 17.532 | 0.1658 | 1.6929 |
| | | | Weibull[b] | 19.28 | 3.764 | 6.043 | 0.0885 | 0.4077 |
| | | Saturated | Normal[b] | 14.35 | 9.957 | 5.277 | 0.0957 | 0.3797 |
| | | | Lognormal | 2.638 | 0.05223 | 7.957 | 0.0848 | 0.4596 |
| | | | Weibull | 15.61 | 5.000 | 6.043 | 0.1084 | 0.4665 |

[a]Normal: $f_x(x) = \frac{1}{\sqrt{2\pi\beta}} e^{\left[-\frac{(x-\alpha)^2}{2\beta}\right]}$ Lognormal: $f_x(x) = \frac{1}{x\sqrt{2\pi\beta}} e^{\left[-\frac{(\ln x-\alpha)^2}{2\beta}\right]}$ Weibull: $f_x(x) = \frac{\alpha}{\beta^\alpha} x^{\alpha-1} e^{-(x/\beta)^\alpha}$

[b]Best-fitting curve for bearing strength.

**Table 12—Perpendicular-to-grain 5% diameter offset strength probability distributions**

| Species | Nail diameter | Moisture content | Distribution[a] | Scale (α) | Shape (β) | $\chi^2$ | K-S | A-D |
|---|---|---|---|---|---|---|---|---|
| Southern Pine | 4.11 | 6% | Normal | 50.35 | 96.40 | 3.297 | 0.0869 | 0.3240 |
| | | | Lognormal[b] | 3.900 | 0.03882 | 2.162 | 0.0869 | 0.2689 |
| | | | Weibull | 54.44 | 5.623 | 4.811 | 0.0858 | 0.3950 |
| | | 9% | Normal | 46.67 | 55.00 | 12.000 | 0.1804 | 1.1520 |
| | | | Lognormal[b] | 3.831 | 0.02259 | 8.595 | 0.1564 | 0.7348 |
| | | | Weibull | 49.95 | 5.999 | 16.919 | 0.1858 | 1.6414 |
| | | 12% | Normal | 37.36 | 45.44 | 5.238 | 0.1038 | 0.4989 |
| | | | Lognormal[b] | 3.605 | 0.03221 | 1.048 | 0.1109 | 0.2951 |
| | | | Weibull | 40.23 | 5.930 | 8.286 | 0.1128 | 0.6817 |
| | | 17% | Normal[b] | 26.05 | 26.98 | 2.846 | 0.1181 | 0.2797 |
| | | | Lognormal | 3.239 | 0.04289 | 1.692 | 0.1446 | 0.4032 |
| | | | Weibull | 28.18 | 5.589 | 2.846 | 0.1454 | 0.2901 |
| | | Saturated | Normal | 15.83 | 8.882 | 4.054 | 0.1232 | 0.4489 |
| | | | Lognormal[b] | 2.744 | 0.03479 | 5.189 | 0.0861 | 0.2294 |
| | | | Weibull | 17.09 | 5.493 | 5.568 | 0.1443 | 0.7740 |
| Spruce–Pine–Fir | 3.33 | 6% | Normal | 24.21 | 57.75 | 8.122 | 0.0929 | 0.5164 |
| | | | Lognormal | 3.138 | 0.09886 | 17.673 | 0.1088 | 0.4578 |
| | | | Weibull | 26.94 | 3.323 | 14.735 | 0.0875 | 0.6077 |
| | | 9% | Normal[b] | 24.30 | 51.75 | 1.600 | 0.0692 | 0.2261 |
| | | | Lognormal | 3.145 | 0.09466 | 7.600 | 0.0746 | 0.3280 |
| | | | Weibull | 26.92 | 3.575 | 5.600 | 0.0667 | 0.3240 |
| | | 12% | Normal | 21.12 | 35.44 | 14.625 | 0.0974 | 0.3576 |
| | | | Lognormal | 3.008 | 0.08916 | 14.250 | 0.1176 | 0.5431 |
| | | | Weibull[b] | 23.33 | 3.830 | 13.500 | 0.0822 | 0.3790 |
| | | 17% | Normal[b] | 17.15 | 20.55 | 6.375 | 0.0827 | 0.4196 |
| | | | Lognormal | 2.806 | 0.07583 | 7.875 | 0.1214 | 0.7516 |
| | | | Weibull | 18.85 | 3.867 | 6.375 | 0.1019 | 0.6838 |
| | | Saturated | Normal | 11.21 | 11.30 | 7.875 | 0.1405 | 1.2274 |
| | | | Lognormal[b] | 2.374 | 0.08317 | 4.875 | 0.1216 | 0.6155 |
| | | | Weibull | 12.45 | 3.497 | 13.125 | 0.1330 | 1.1713 |
| Spruce–Pine–Fir | 4.11 | 6% | Normal | 22.80 | 47.50 | 4.082 | 0.1136 | 0.7121 |
| | | | Lognormal[b] | 3.082 | 0.09120 | 14.000 | 0.0971 | 0.6670 |
| | | | Weibull | 25.28 | 3.365 | 8.491 | 0.1310 | 1.0178 |
| | | 9% | Normal[b] | 22.37 | 38.54 | 11.061 | 0.0850 | 0.4120 |
| | | | Lognormal | 3.067 | 0.08587 | 11.796 | 0.1305 | 0.6635 |
| | | | Weibull | 24.70 | 3.916 | 11.429 | 0.0988 | 0.4722 |
| | | 12% | Normal | 19.89 | 32.10 | 8.857 | 0.0691 | 0.4405 |
| | | | Lognormal | 2.949 | 0.08360 | 8.490 | 0.0780 | 0.3944 |
| | | | Weibull | 21.98 | 3.693 | 5.184 | 0.0843 | 0.5709 |
| | | 17% | Normal[b] | 15.97 | 18.50 | 3.714 | 0.0709 | 0.2387 |
| | | | Lognormal | 2.732 | 0.08322 | 8.857 | 0.1276 | 0.6017 |
| | | | Weibull | 17.60 | 4.096 | 4.816 | 0.0759 | 0.2657 |
| | | Saturated | Normal | 8.70 | 7.658 | 14.735 | 0.1204 | 0.7919 |
| | | | Lognormal | 2.116 | 0.09326 | 9.224 | 0.1163 | 0.4080 |
| | | | Weibull[b] | 9.69 | 3.245 | 8.490 | 0.0941 | 0.8064 |
| Spruce–Pine–Fir | 5.76 | 6% | Normal[b] | 22.74 | 31.41 | 3.273 | 0.0689 | 0.2983 |
| | | | Lognormal | 3.093 | 0.06319 | 8.364 | 0.0932 | 0.3585 |
| | | | Weibull | 24.92 | 4.350 | 8.000 | 0.0810 | 0.3798 |
| | | 9% | Normal[b] | 20.55 | 27.46 | 3.745 | 0.0931 | 0.2566 |
| | | | Lognormal | 2.990 | 0.06876 | 6.043 | 0.1006 | 0.3897 |
| | | | Weibull | 22.57 | 4.237 | 4.128 | 0.0914 | 0.2813 |
| | | 12% | Normal | 18.11 | 17.79 | 3.200 | 0.0882 | 0.2907 |
| | | | Lognormal | 2.866 | 0.06345 | 8.800 | 0.1324 | 0.7334 |
| | | | Weibull[b] | 19.75 | 4.957 | 1.600 | 0.0688 | 0.2120 |
| | | 17% | Normal | 12.77 | 10.62 | 3.696 | 0.0764 | 0.1945 |
| | | | Lognormal | 2.511 | 0.07904 | 10.739 | 0.1271 | 0.6133 |
| | | | Weibull[b] | 14.02 | 4.491 | 2.913 | 0.0791 | 0.1595 |
| | | Saturated | Normal | 6.95 | 3.60 | 6.435 | 0.0932 | 0.5898 |
| | | | Lognormal[b] | 1.902 | 0.07105 | 2.522 | 0.0673 | 0.1943 |
| | | | Weibull | 7.67 | 3.816 | 7.217 | 0.0910 | 0.7162 |

[a]Normal: $f_x(x) = \frac{1}{\sqrt{2\pi\beta}} e^{\left[-\frac{(x-\alpha)^2}{2\beta}\right]}$ Lognormal: $f_x(x) = \frac{1}{x\sqrt{2\pi\beta}} e^{\left[-\frac{(\ln x-\alpha)^2}{2\beta}\right]}$ Weibull: $f_x(x) = \frac{\alpha}{\beta^\alpha} x^{\alpha-1} e^{-(x/\beta)^\alpha}$

[b]Best-fitting curve for bearing strength.

**Table 13— Linear regression relationship between specific gravity and nail bearing stiffness**

| Grain orientation | Moisture content | $P$ = A + B(G)[a] | | | Mean deviation | Standard error |
|---|---|---|---|---|---|---|
| | | A | B | $r^2$ | | |
| Parallel | 6% | –150.53 | 543.15 | 0.52 | 3.97 | 49.40 |
| | 12% | 18.58 | 170.43 | 0.17 | –0.33 | 41.06 |
| | 15% | –10.95 | 207.85 | 0.33 | –0.73 | 36.82 |
| | Saturated | –8.55 | 80.97 | 0.30 | –0.12 | 39.99 |
| Perpendicular | 6% | –72.20 | 240.08 | 0.58 | 31.03 | 380.11 |
| | 12% | –49.53 | 176.29 | 0.59 | 3.71 | 42.69 |
| | 15% | –41.10 | 142.55 | 0.54 | 7.15 | 56.53 |
| | Saturated | –10.17 | 38.30 | 0.54 | 2.54 | 37.05 |
| Combined | 6% | –107.55 | 386.83 | 0.32 | 4.08 | 70.43 |
| | 12% | –13.77 | 171.79 | 0.16 | –0.58 | 62.80 |
| | 15% | –24.43 | 177.32 | 0.20 | –1.02 | 63.11 |
| | Saturated | –8.14 | 58.28 | 0.14 | –0.24 | 70.78 |

[a] $P$ = 20% to 40% of maximum load nail bearing stiffness (in N/mm$^3$).

**Table 14—Linear regression relationship between specific gravity and nail bearing strength**

| Grain orientation | Moisture content | $P$ = A + B(G)[a] | | | Mean deviation | Standard error |
|---|---|---|---|---|---|---|
| | | A | B | $r^2$ | | |
| Parallel | 6% | –30.48 | 155.99 | 0.57 | 0.78 | 27.71 |
| | 12% | –13.68 | 101.86 | 0.75 | –0.19 | 17.84 |
| | 15% | –13.71 | 94.25 | 0.84 | –0.03 | 13.89 |
| | Saturated | –6.63 | 54.24 | 0.72 | –0.12 | 17.58 |
| Perpendicular | 6% | –36.92 | 142.95 | 0.89 | 1.78 | 19.34 |
| | 12% | –24.38 | 105.48 | 0.87 | 0.76 | 15.35 |
| | 15% | –20.62 | 90.02 | 0.84 | 1.18 | 16.58 |
| | Saturated | –8.63 | 42.32 | 0.69 | –0.08 | 21.85 |
| Combined | 6% | –33.00 | 148.61 | 0.61 | 0.83 | 30.40 |
| | 12% | –18.82 | 103.50 | 0.73 | –0.02 | 22.13 |
| | 15% | –16.93 | 92.40 | 0.74 | 0.12 | 21.57 |
| | Saturated | –7.22 | 47.84 | 0.49 | –0.24 | 30.82 |

[a] $P$ = 5% diameter offset nail bearing strength (in MPa).

# Conclusions

Based on the results of this study on the effect of MC on the nail bearing properties in yellow-cedar, maple, Southern Pine, and Spruce–Pine–Fir, the following can be concluded:

- Parallel-to-grain offset loads increased 7.7% from the reference 5% offset values to the 50% offset load values. Perpendicular-to-grain offset loads significantly increased from the reference 5% values, with a nearly 28.5% increase to a 50% offset load.
- Grain orientation significantly affected both the nail bearing stiffness and strength.
- ANOVA results did not conclusively determine that all nail diameters had a significant effect on bearing strength, but average values decreased as the nail diameter increased.
- MC was negatively correlated with nail stiffness and bearing strength. Expressions relating MC to nail stiffness and bearing strength for each wood species were developed.

- A normal distribution fit the probability distribution of parallel-to-grain nail bearing strength but no distribution adequately fit the perpendicular-to-grain nail bearing strength.

- Both nail bearing stiffness and strength were positively correlated to specific gravity. However, the slope of the specific gravity–nail bearing strength relationship was a function of MC.

- Linear expressions relating specific gravity and nail bearing strength were developed at 6%, 12%, 15%, and saturated moisture conditions.

- For typical wood species used in construction, the difference between the best-fit linear expression for 12% MC, 4.11-mm experimental nail bearing strength compared with specific gravity and Wilkinson's is less than 10%.

# References


**AF&PA.** 1997. National design specification for wood construction. Washington, DC: American Forest & Paper Association.

**ASCE.** 1996. Load and resistance factored design for engineered wood construction. Reston, VA: American Society of Civil Engineers.

**ASTM.** 1995a. Standard test methods for specific gravity of wood and wood-base materials. ASTM D2395–93. West Conshohocken, PA: American Society for Testing and Materials.

**ASTM.** 1995b. Standard test methods for direct moisture content measurement of wood and wood-base materials. ASTM D4442–92. West Conshohocken, PA: American Society for Testing and Materials.

**ASTM.** 1996. Standard test method for evaluating dowel-bearing strength of wood and wood-base materials. ASTM D5764–95. West Conshohocken, PA: American Society for Testing and Materials.

**European Committee for Standardization.** 1993. Timber structures—Test methods—Determination of embedding strength and foundation values for dowel type fasteners. European Standard EN 383. Brussels, Belgium: European Committee for Standardization.

**Fahlbusch, H.** 1949. A contribution to the problem of the bearing strength of bolts in wood under static loads. Rep. 49–09, Institute for Mechanical Construction and Carpentry, Technical School Braunschweig. Trans. 218 from German. Madison, WI: U.S. Department of Agriculture, Forest Service, Forest Products Laboratory.

**Forest Products Laboratory.** 1999. The wood handbook: wood as an engineering material. Gen. Tech. Rep. FPL–GTR–113. Madison, WI: U.S. Department of Agriculture Forest Service, Forest Products Laboratory. 463 p.

**Green, D.W.; Kretschmann, D.E.** 1994. Moisture content and the properties of clear Southern Pine. Res. Pap. FPL–RP–531. Madison, WI: U.S. Department of Agriculture, Forest Service, Forest Products Laboratory.

**Koponen, S.** 1991. Embedding characteristics of wood in the grain direction. Rep. 25. Espoo, Finland: Helsinki University of Technology, Laboratory of Structural Engineering and Building Physics. 21 p.

**Pope, D.J.; Hilson, B.O.** 1995. Embedment testing for bolts: A comparison of the European and American procedures. Journal of the Institute of Wood Science. 13(6): 568–571 (Issue 78).

**Rammer, D.R.** 1999. Parallel-to-grain dowel-bearing strength of two Guatemalan hardwoods. Forest Products Journal. 49(6): 77–87.

**Rammer, D.R.; Winistorfer, S.G.** 2001. Effect of moisture content on dowel-bearing strength. Wood and Fiber Science. 33(1): 126–139.

**Smith, I.; Whale, R.J.; Anderson, C.; Hilson, B.O.; Rodd, P.D.** 1988. Design properties of laterally loaded nailed and bolted wood joints. Canadian Journal of Civil Engineering. 15: 633–643.

**Wilkinson, T.L.** 1991. Dowel bearing strength. Res. Pap. FPL–RP–505. Madison, WI: U.S. Department of Agriculture, Forest Service, Forest Products Laboratory.

**Wilson, T.R.C.** 1932. Strength–moisture relations for wood. Tech. Bull. 282. Washington, DC: U.S. Department of Agriculture.

**Winistorfer, S.G.** 1994. Validation of the European yield model for nailed connections. In: Proceedings of structures congress 1994; 1994 April 24–28; Atlanta, GA. New York: American Society of Civil Engineers.

# Appendix—Nonparametric Distributional Information

**Table A1—Nonparametric distributional information for 5% diameter offset bearing strength—parallel to grain**

| Moisture content | Sample size | Bearing strength | | | | | | | | |
|---|---|---|---|---|---|---|---|---|---|---|
| | | Mean (MPa) | COV (%) | Min. (MPa) | Percentiles (MPa) | | | | | Max. (MPa) |
| | | | | | 10th | 25th | 50th | 75th | 90th | |
| **Yellow-cedar** | | | | | | | | | | |
| 6% | 33 | 56.84 | 15.6 | 36.10 | 42.65 | 52.23 | 58.37 | 62.78 | 64.69 | 75.39 |
| 12% | 34 | 42.38 | 15.4 | 17.88 | 36.10 | 39.60 | 42.60 | 46.76 | 49.25 | 56.17 |
| 17% | 34 | 31.01 | 14.5 | 17.14 | 24.73 | 28.72 | 30.85 | 33.88 | 35.64 | 41.81 |
| Saturated | 34 | 23.21 | 19.1 | 17.80 | 18.57 | 20.20 | 22.10 | 24.87 | 31.67 | 34.71 |
| **Maple** | | | | | | | | | | |
| 6% | 30 | 79.67 | 16.3 | 54.08 | 59.88 | 71.89 | 81.59 | 89.31 | 96.20 | 106.53 |
| 12% | 30 | 48.09 | 16.4 | 29.00 | 38.56 | 43.29 | 47.21 | 54.12 | 60.02 | 64.41 |
| 17% | 30 | 44.76 | 16.9 | 30.59 | 32.88 | 39.91 | 44.94 | 48.46 | 52.92 | 62.69 |
| Saturated | 31 | 31.02 | 14.7 | 23.08 | 24.55 | 27.14 | 31.23 | 34.39 | 36.94 | 41.77 |
| **Southern Pine** | | | | | | | | | | |
| 6% | 37 | 47.20 | 27.6 | 22.19 | 28.37 | 36.89 | 49.93 | 57.20 | 65.63 | 68.74 |
| 9% | 37 | 49.22 | 18.8 | 33.20 | 38.02 | 41.11 | 49.75 | 56.15 | 61.02 | 74.34 |
| 12% | 43 | 46.59 | 19.4 | 29.73 | 35.63 | 40.91 | 44.96 | 52.33 | 60.56 | 66.37 |
| 17% | 37 | 34.31 | 16.7 | 24.46 | 27.26 | 29.17 | 32.99 | 38.70 | 41.59 | 48.86 |
| Saturated | 37 | 24.50 | 16.5 | 14.36 | 19.74 | 21.76 | 24.34 | 27.88 | 29.73 | 32.38 |
| **Spruce–Pine–Fir: 3.33 mm** | | | | | | | | | | |
| 6% | 45 | 34.94 | 22.3 | 19.57 | 24.89 | 29.07 | 35.08 | 40.47 | 44.64 | 57.78 |
| 9% | 50 | 34.51 | 24.2 | 11.06 | 23.92 | 29.33 | 33.99 | 39.14 | 48.68 | 52.26 |
| 12% | 49 | 28.89 | 19.4 | 16.78 | 21.29 | 25.02 | 28.65 | 32.87 | 36.64 | 41.17 |
| 17% | 49 | 23.66 | 17.4 | 14.00 | 19.04 | 20.85 | 23.14 | 25.25 | 31.33 | 31.69 |
| Saturated | 49 | 16.10 | 25.3 | 7.72 | 10.57 | 13.24 | 15.67 | 18.74 | 23.28 | 24.51 |
| **Spruce–Pine–Fir: 3.76 mm** | | | | | | | | | | |
| 12% | 31 | 29.66 | 24.2 | 16.73 | 22.99 | 24.89 | 28.30 | 32.99 | 36.97 | 56.95 |
| **Spruce–Pine–Fir: 4.11 mm** | | | | | | | | | | |
| 6% | 49 | 32.61 | 30.2 | 7.63 | 20.25 | 27.26 | 33.02 | 36.26 | 44.29 | 54.02 |
| 9% | 48 | 32.62 | 26.5 | 16.03 | 21.63 | 27.16 | 33.08 | 36.69 | 42.17 | 66.10 |
| 12% | 49 | 27.68 | 26.0 | 11.25 | 17.36 | 23.25 | 28.13 | 32.73 | 36.30 | 47.29 |
| 17% | 50 | 22.54 | 22.0 | 12.49 | 16.44 | 19.22 | 22.09 | 25.27 | 28.59 | 38.17 |
| 19% | 50 | 22.30 | 20.7 | 13.17 | 14.93 | 19.01 | 22.62 | 25.11 | 29.13 | 32.83 |
| Saturated | 50 | 15.59 | 29.0 | 7.10 | 10.59 | 12.10 | 15.16 | 18.13 | 20.20 | 32.13 |
| **Spruce–Pine–Fir: 5.76 mm** | | | | | | | | | | |
| 6% | 39 | 30.91 | 30.7 | 15.28 | 19.10 | 22.96 | 29.85 | 38.99 | 45.73 | 50.59 |
| 9% | 47 | 30.34 | 23.0 | 17.44 | 21.23 | 24.40 | 29.20 | 35.23 | 40.10 | 46.88 |
| 12% | 47 | 31.95 | 19.0 | 19.22 | 24.77 | 27.67 | 30.62 | 36.68 | 41.05 | 47.32 |
| 17% | 47 | 18.42 | 21.2 | 8.19 | 13.18 | 15.39 | 18.59 | 21.70 | 23.71 | 25.84 |
| Saturated | 47 | 14.35 | 22.2 | 8.14 | 9.26 | 12.39 | 13.67 | 17.09 | 18.36 | 21.44 |

**Table A2—Nonparametric distributional information for 5% diameter offset bearing strength—perpendicular to grain**

| Moisture content | Sample size | Bearing strength | | | | | | | | |
|---|---|---|---|---|---|---|---|---|---|---|
| | | Mean (MPa) | COV (%) | Min. (MPa) | Percentiles (MPa) | | | | | Max. (MPa) |
| | | | | | 10th | 25th | 50th | 75th | 90th | |
| **Yellow-cedar** | | | | | | | | | | |
| 6% | 24 | 35.55 | 15.88 | 24.89 | 27.48 | 31.09 | 35.46 | 39.92 | 43.97 | 45.57 |
| 12% | 26 | 27.62 | 23.25 | 17.37 | 18.28 | 21.82 | 27.71 | 31.76 | 36.87 | 40.55 |
| 17% | 23 | 21.03 | 17.67 | 14.46 | 15.00 | 18.40 | 21.09 | 23.58 | 25.36 | 29.71 |
| Saturated | 24 | 14.49 | 27.7 | 8.61 | 10.13 | 11.28 | 13.50 | 17.62 | 21.52 | 23.59 |
| **Maple** | | | | | | | | | | |
| 6% | 29 | 60.08 | 19.0 | 39.02 | 42.54 | 49.42 | 60.79 | 69.26 | 75.24 | 81.38 |
| 12% | 30 | 46.99 | 20.4 | 29.69 | 35.35 | 39.90 | 46.57 | 53.69 | 59.82 | 73.36 |
| 17% | 29 | 39.43 | 20.0 | 25.06 | 30.74 | 33.04 | 38.73 | 45.03 | 50.17 | 57.39 |
| Saturated | 30 | 21.29 | 26.5 | 11.46 | 13.58 | 17.94 | 19.69 | 24.31 | 31.13 | 32.63 |
| **Southern Pine** | | | | | | | | | | |
| 6% | 37 | 49.90 | 19.9 | 32.81 | 36.67 | 40.94 | 49.36 | 57.98 | 63.43 | 70.79 |
| 9% | 37 | 45.36 | 16.9 | 34.29 | 37.39 | 39.53 | 43.03 | 50.21 | 57.89 | 68.28 |
| 12% | 42 | 40.08 | 17.0 | 27.42 | 32.04 | 35.51 | 38.81 | 45.30 | 51.02 | 53.68 |
| 17% | 37 | 26.39 | 17.0 | 19.36 | 21.21 | 23.93 | 24.61 | 28.94 | 33.53 | 37.27 |
| Saturated | 37 | 15.30 | 19.1 | 10.50 | 12.08 | 13.78 | 15.84 | 17.83 | 20.71 | 22.88 |
| **Spruce–Pine–Fir: 3.33 mm** | | | | | | | | | | |
| 6% | 49 | 23.70 | 34.6 | 11.10 | 15.01 | 17.30 | 23.69 | 29.09 | 32.80 | 48.10 |
| 9% | 48 | 24.33 | 29.6 | 10.63 | 15.28 | 19.00 | 23.58 | 28.46 | 32.95 | 46.30 |
| 12% | 48 | 21.61 | 26.5 | 9.94 | 15.49 | 16.79 | 21.60 | 25.25 | 28.68 | 38.54 |
| 17% | 48 | 17.51 | 25.9 | 8.74 | 12.31 | 14.60 | 17.09 | 20.13 | 23.13 | 35.14 |
| Saturated | 48 | 11.21 | 30.3 | 6.56 | 8.07 | 8.58 | 10.41 | 13.50 | 16.20 | 20.61 |
| **Spruce–Pine–Fir: 3.76 mm** | | | | | | | | | | |
| 12% | 46 | 20.80 | 22.4 | 11.73 | 14.68 | 18.40 | 20.13 | 23.35 | 27.65 | 32.60 |
| **Spruce–Pine–Fir: 4.11 mm** | | | | | | | | | | |
| 6% | 49 | 22.68 | 30.6 | 10.77 | 14.57 | 17.88 | 22.85 | 26.17 | 29.04 | 46.04 |
| 9% | 49 | 22.45 | 27.5 | 11.13 | 14.56 | 17.68 | 23.37 | 24.98 | 32.05 | 37.14 |
| 12% | 49 | 20.45 | 26.8 | 10.62 | 14.25 | 16.09 | 20.29 | 23.97 | 25.81 | 35.48 |
| 15% | 50 | 16.19 | 26.5 | 9.02 | 9.05 | 13.34 | 15.52 | 18.14 | 23.57 | 27.65 |
| 17% | 50 | 15.51 | 24.3 | 8.38 | 10.24 | 13.20 | 15.30 | 17.84 | 19.91 | 25.09 |
| Saturated | 49 | 8.71 | 32.1 | 4.49 | 5.68 | 6.37 | 8.22 | 10.57 | 12.44 | 18.38 |
| **Spruce–Pine–Fir: 5.76 mm** | | | | | | | | | | |
| 6% | 44 | 22.39 | 24.7 | 12.59 | 15.16 | 17.97 | 21.76 | 25.96 | 29.81 | 36.46 |
| 9% | 47 | 20.44 | 25.6 | 11.73 | 13.70 | 16.49 | 21.24 | 23.73 | 27.30 | 34.49 |
| 12% | 46 | 18.82 | 21.3 | 10.93 | 13.19 | 15.57 | 18.72 | 22.04 | 24.25 | 26.77 |
| 17% | 46 | 13.13 | 21.4 | 8.56 | 9.30 | 10.96 | 12.25 | 15.12 | 17.26 | 19.58 |
| Saturated | 46 | 6.95 | 27.6 | 3.90 | 4.87 | 5.43 | 6.59 | 8.02 | 9.50 | 11.83 |