United States
Department of
Agriculture

**Forest Service**

Forest
Products
Laboratory

Research
Paper
FPL–RP–517

# Stiffness and Strength Properties of Shear Transfer Plate Connections

**Ronald Wolfe**
**David Bohnhoff**
**Robert Nagel**

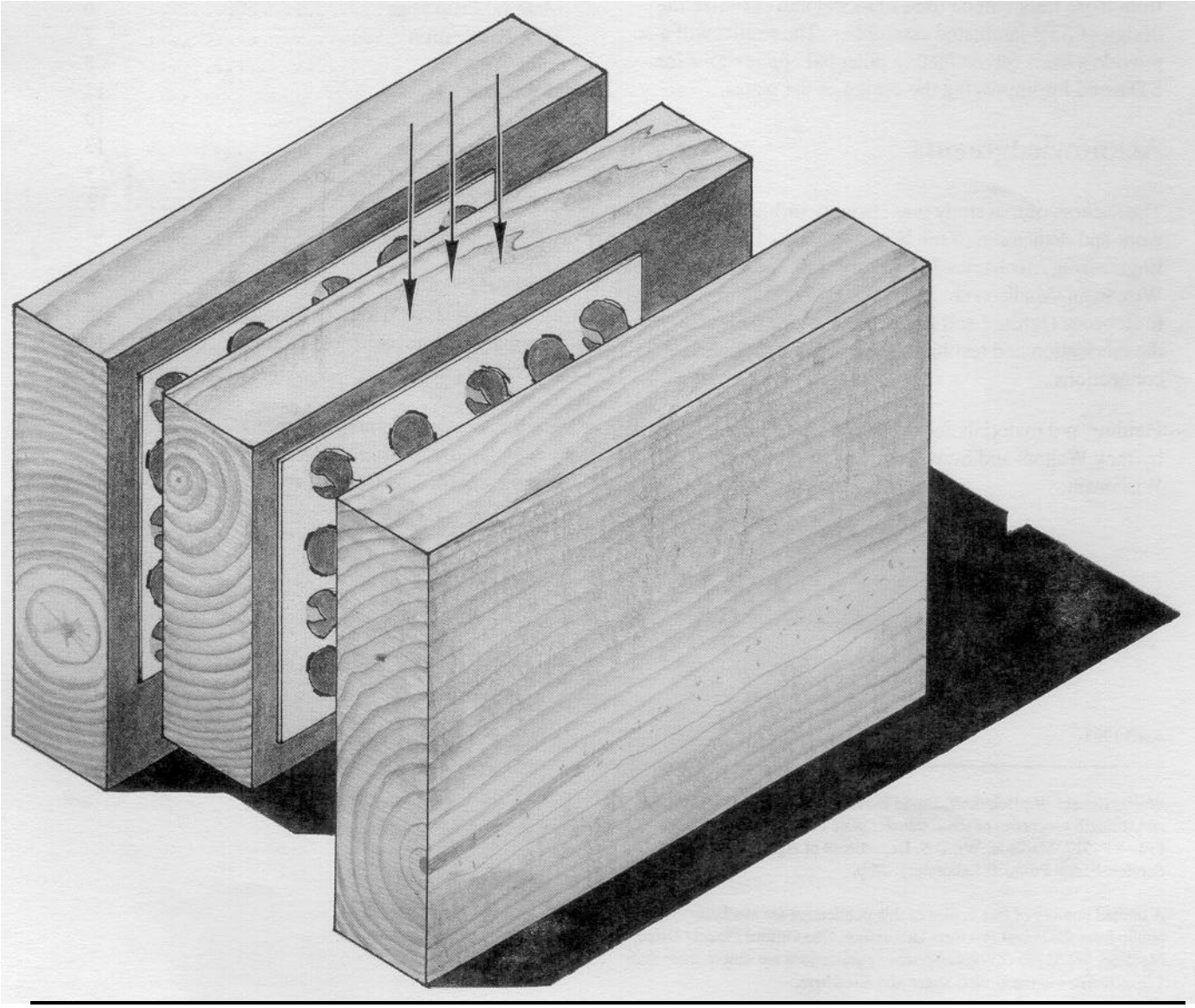

## Abstract

Shear transfer plates (STPs) are light-gauge steel plates with teeth on both sides that are used to transfer load between two layers of lumber. The objective of this study was to evaluate the strength and stiffness characteristics of STP connections through the use of double-block shear tests. Test variables included fabrication method, connection boundary conditions, plate size, plate material, wood specific gravity, and load-to-grain orientation. Of these variables, fabrication method, connection boundary conditions, and wood specific gravity had the greatest effect on connection strength and stiffness. Test joint strength ranged from 175 to 628 lb/plug. The conditions that produced the lowest strength values were low wood specific gravity and reduced friction between the testing machine base and the test specimen. Effects of load-to-grain orientation and plate type varied with species. Data from these tests will be used to model and optimize the design of STP-laminated assemblies. The results will also provide a basis for evaluating potential applications for STPs and for improving the design of the plates.



## Acknowledgments

The success of this study was strongly influenced by the work and dedication of the Forest Products Laboratory Engineering Mechanics Laboratory staff and University of Wisconsin-Madison students. We give special recognition to Rebecca Gardner and Randy Bischel for their efforts in the fabrication and testing of the shear transfer plate connections.

Funding and materials for this study were supplied in part by Jack Walters and Sons Company of Allenton, Wisconsin.



**April 1993**

**Wolfe, Ronald W.; Bohnhoff, David R.; Nagel, Robert. 1993. Stiffness and strength properties of shear transfer plate connections. Res. Pap. FPL-RP-517. Madison, WI: U.S. Department of Agriculture, Forest Service, Forest Products Laboratory. 25 p.**

**A limited number of free copies of this publication are available to the public from the Forest Products Laboratory, One Gifford Pinchot Drive, Madison, WI 53705-2398. Laboratory publications are sent to more than 1,000 libraries in the United States and elsewhere.**

**The Forest Products Laboratory is maintained in cooperation with the University of Wisconsin.**


## Contents


| | *Page* |
|---|---|
| Introduction | 1 |
| Previous Research | 1 |
| Objectives | 3 |
| Methods | 3 |
| Materials | 3 |
| Test Joint Configuration | 3 |
| Experimental Design | 4 |
| Lumber Preparation and Joint Fabrication | 4 |
| Test Procedures | 5 |
| Joint Identification | 6 |
| Data Reduction | 6 |
| Results | 6 |
| Material Properties | 6 |
| Joint Fabrication | 7 |
| Joint Tests | 8 |
| Analysis | 12 |
| Analysis of Variance | 13 |
| Load-Slip Model | 13 |
| Tabulation of Test Results | 13 |
| Discussion | 13 |
| Phase I | 13 |
| Phase II | 15 |
| Phase III | 15 |
| Summary of Joint Strength Results | 18 |
| Summary of Joint Stiffness Results | 19 |
| Conclusions | 19 |
| References | 19 |
| Appendix A—Confinemement Apparatus | 20 |
| Appendix B—Derivation of Foschi Parameters for Load-Slip Curves | 22 |

# Stiffness and Strength Properties of Shear Transfer Plate Connections

**Ronald W. Wolfe,** Research Engineer
Forest Products Laboratory, Madison, Wisconsin

**David R. Bohnhoff,** Assistant Professor of Agricultural Engineering
University of Wisconsin, Madison, Wisconsin

Robert **Nagel,** Statistician
Forest Products Laboratory, Madison, Wisconsin

## Introduction

Mechanically laminated dimension lumber assemblies are gaining in popularity for applications such as framing headers, columns, bridge decks, and agricultural building posts. One approach to mechanical lamination is to use a double-sided nail plate called a shear transfer plate (STP) (Fig. 1). The plates are fabricated from 20-gauge (0.035 in.-thick) sheet steel (see Table 1 for SI conversion factors). Teeth protruding from both surfaces enable the transfer of shear forces between adjacent laminations. These plates have been shown to be especially effective for transferring shear forces around butt joints. Therefore, with proper design information, these plates can be used to mechanically laminate odd lengths of lumber or to fabricate posts with one end treated for soil embedment and the other end untreated. The STPs can be installed in the factory or at the job site using equipment commonly used to install metal truss plates. The STPs are typically pressed into place in two stages. First, the STP is completely pressed into one wood member using a special steel pressing plate that fits over the STP. The pressing plate is then removed, and the other member is placed over the STP and pressed into place. A one-stage process could be used to simultaneously press the plate into both wood members. Although such a process is faster, it is generally not used because it puts a permanent wave in the plate, which hampers a tight connection. No data are available on the effect of pressing on the load-slip properties of STP connections.

The purpose of this study was to obtain information about the structural performance of STP joints and their sensitivity to fabrication methods, material properties, and test-boundary conditions.

### Previous Research

The concept of a double-sided nail plate for transferring shear between layers in a laminated assembly is not new, but its use has been limited to custom applications. Thus, little information has been published on the structural performance and modeling of STP-laminated assemblies. One of the few published studies on STP was conducted in 1987 at the Forest Products Laboratory (Bohnhoff 1988). Two types of STP-laminated assemblies were fabricated and tested to determine how well the displaced geometry of the loaded assemblies could be predicted using a finite element analysis (FEA) method developed by Bohnhoff (Bohnhoff 1987; Bohnhoff and others 1989). To generate the load-slip parameters needed for the FEA, a total of 48 STP joint tests were conducted; half the joints were loaded parallel-to-grain and the other half perpendicular-to-grain. Each test consisted of pulling an individual plate from between two pieces of dimension lumber, as shown in Figure 2a.

**Table 1—SI conversion factors**

| English unit | Conversion factor | SI unit |
|---|---|---|
| inch (in.) | 25.4 | millimeter (mm) |
| foot (ft) | 0.3048 | meter (m) |
| pound (lb) | 0.4535 | kilogram (kg) |
| pound per square inch ($lb/m^2$) | 6,894 | Pascal (Pa) |

The results of the STP joint tests showed that both the direction of applied load and the specific gravity of the wood had a significant influence on the load-slip relationship. However, when load-slip parameters generated from the test data were used to predict the behavior of STP-laminated assemblies, prediction accuracy was poor. To accurately estimate the displaced geometry of the assemblies, the parameters controlling the initial predicted stiffness of the STP joints for perpendicular-to-grain loads had to be doubled. This doubling resulted in the perpendicular- and parallel-to-grain load-slip relationships being nearly equal at low load levels.

There was no obvious explanation for the discrepancy between predicted and measured perpendicular-to-grain

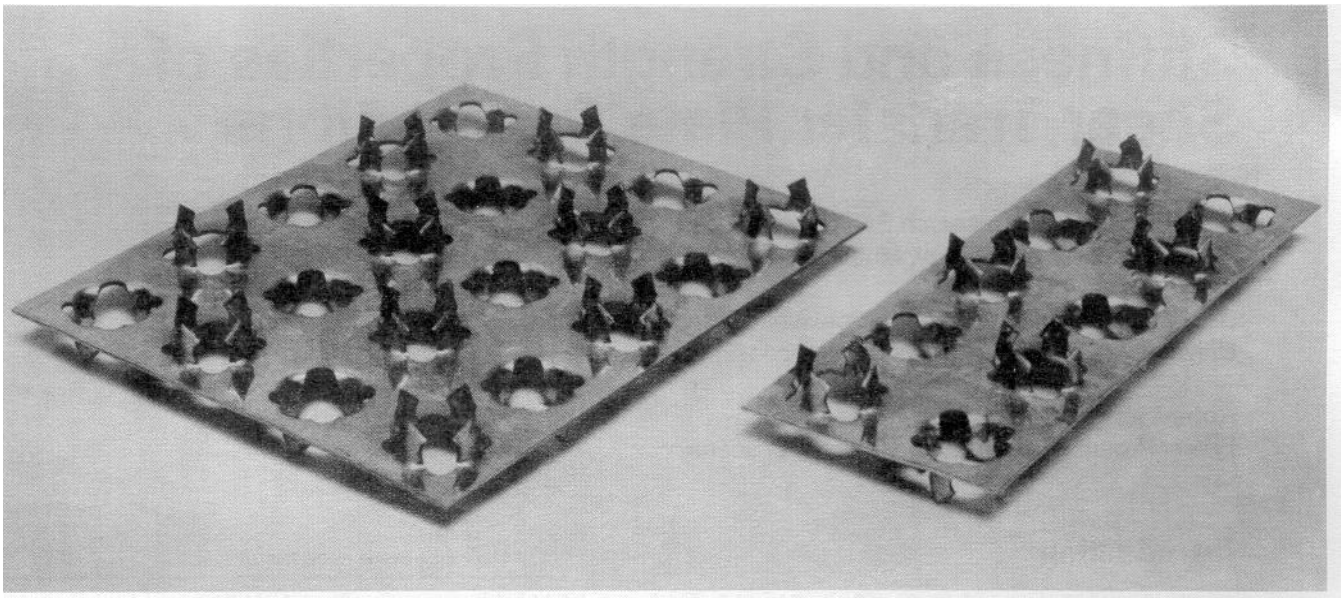

*Figure 1—STP plates with plug density of 1 plug/in$^2$. (M91 0128-13)*

stiffness nor a good explanation for the difference between perpendicular- and parallel-to-grain load-slip curves. In general, the initial slip of a connector shows little influence of load direction. These results suggest a need to revise joint test procedure or the setup used to determine STP load-slip parameters.

A reevaluation of the test procedures used in the STP pilot tests resulted in the following recommendations:

1. The plates should not be pulled from between two pieces of wood (Fig. 2a). This action loads teeth on opposite sides of the plate in the same direction. Instead, the plates should be tested as they are used in actual assemblies, with teeth on opposite sides of the plates loaded in opposite directions (Fig. 2b).

2. Test boundary conditions for parallel- and perpendicular-to-grain loads should be identical to isolate variability resulting from load-to-grain orientation.

3. The load-slip test should involve more than just a single row of plugs. By loading plates in shear (Fig. 2b), plates of any size can be tested without fear of inducing large forces in the plate strands.

4. The sensitivity of STP load-slip to lateral restraint should be investigated.

Based on the results of Bohnhoff's initial study, STPs can apparently provide a good alternative to other mechanical fasteners (bolts, screws, nails, timber connectors) used to transfer load between wood layers.

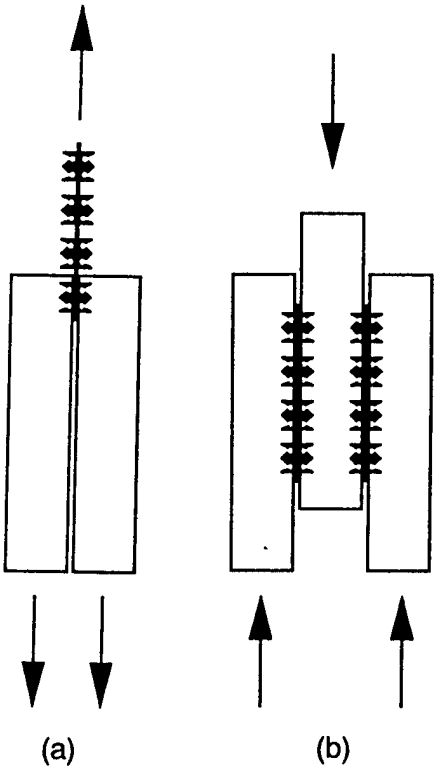


*Figure 2—Alternative methods of testing shear capacity of STP connections. When the plate is pulled from between two pieces of wood (a), teeth on both sides of the plate are bent in the same direction. When the plate transfers shear from one piece of wood to another (b), teeth on opposite faces are stressed in opposite directions.*

The STPs can transfer high loads over a relatively small area, can be installed at the building site, and provide adequate shear transfer properties for many applications. As is the case with other connectors punched from sheet steel, STPs are relatively inexpensive and can be manufactured in a wide range of sizes. To expand the use of these connectors, strength and stiffness properties are needed for structural design and analysis.

### Objectives

This study was an extension of work previously conducted by Bohnhoff (1988). The overall objective was to provide an improved basis for characterizing nonlinear load-slip and ultimate strength properties of shear transfer plates. The study variables included plate size, plate material, wood species, fabrication method, and teat joint boundary conditions. Results are applicable to both analytical models and design of STP-laminated assemblies.

## Methods

### Materials

To provide meaningful results for building designers as well as researchers, we selected materials commonly used in construction. Three species of lumber were selected to represent the most widely used structural species and to provide a wide range of specific gravities: Douglas Fir, Southern Pine, and Spruce-Pine-Fir. The STPs used were 20-gauge (0.035-in-thick) plates and contained one plug per square inch (Fig. 1).

Lumber size and quality were selected to meet the joint test requirements. Details of the teat joint configuration required material >6 in. wide. Lumber length was selected to provide eight end-matched teat joints per board. To limit outside sources of variability, we attempted to limit effects of defects and moisture content through proper material selection and conditioning. All lumber was therefore purchased as nominal 2 by 8 dimension lumber in 16-ft lengths and was conditioned to 12 percent equilibrium moisture content prior to use. Lumber grades included 1950f MSR Southern Pine (42 pieces), No. 2 or better Spruce-Pine-Fir (14 pieces), and No. 2 or better Douglas Fir (14 pieces).

The STP variations included plate size and type of metal. The effect of size is a common consideration for many aspects of design and must be evaluated before results can be extrapolated to plate sizes outside the range tested Two plate sizes were tested: 2 x 5 in. and 4 x 5 in. (hereafter called simply 2x5 and 4x5). In situations where mechanically laminated assemblies require the use of treated wood, potential electrolytic reactions between metal elements commonly found in some preservative

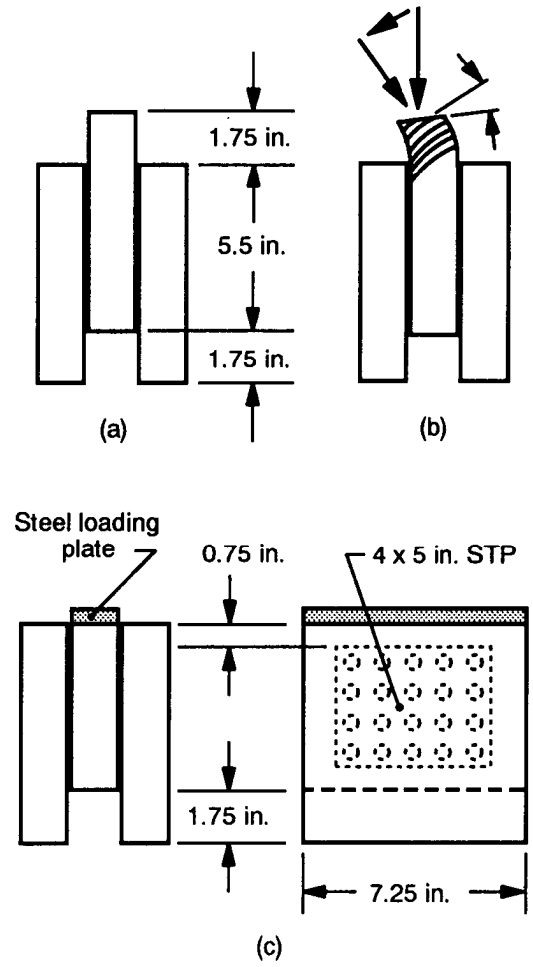


*Figure 3—Double-block shear tests. Rolling shear occurred when center member was offset 1.5 in. above other members (a) and annual rings were oriented at an angle to face of center member (b). Rolling shear was no longer a problem when center member was cut flush and a steel block 7.25 by 1.5 by 1 in. was used to apply load (c).*

salt treatments and zinc may require the use of stainless steel or insulative coatings. For this reason, we included both galvanized and stainless steel plates in the study.

### Test Joint Configuration

All joints consisted of three 7.25-in. square pieces of wood laminated using two STPs. In each case, the center member was offset 1.5 in. (Fig. 3a). The STPs were centrally located in the 5.5- by 7.25-in. interface areas between the side and middle members. The initial study plan called for the center member to protrude above the side members (Fig. 3a). However, pilot tests on joint behavior showed that tilting of the protruding member (Fig. 3b) as a result of rolling shear between the annual rings and compression perpendicular to the grain would necessitate unrealistic failure modes to control joint

**Table 2—Experimental design[a]**

| Phase | Species | Pressing | Plate size | Plate type | Load to grain orientation | Joint[b] |
|---|---|---|---|---|---|---|
| I | SP | One-stage | 2x5 | Galv | PERP | 25-1 |
| | | | 4x5 | | | 45-1 |
| | | Two-stage | 2x5 | | | 25-2 |
| | | | 4x5 | | | 45-2 |
| II | SP | Two-stage | 4x5 | Galv | PERP | WOA |
| | | | | | | ANP |
| | | | | | | ALO |
| | | | | | | AHI |
| III | SP | Two-stage | 4x5 | SS | PERP | SP-S-E |
| | | | | Galv | | SP-G-E |
| | | | | SS | PAR | SP-S-A |
| | | | | Galv | | SP-G-A |
| | SPF | Two-stage | 4x5 | SS | PERP | SPF-S-E |
| | | | | Galv | | SPF-G-E |
| | | | | SS | PAR | SPF-S-A |
| | | | | Galv | | SPF-G-A |
| | DF | Two-stage | 4x5 | SS | PERP | DF-S-E |
| | | | | Galv | | DF-G-E |
| | | | | SS | PAR | DF-S-A |
| | | | | Galv | | DF-G-A |

[a]DF is Douglas Fir, GALV galvanized, PAR parallel to grain, PERP perpendicular to grain, SPF Spruce-Pine-Fir, SS stainless steel, and SP Southern Pine.

[b] WOA is no test apparatus used, ANO apparatus used with no restraint, ALO 20 lb/in$^2$ restraining pressure, and AHI 40 lb/in$^2$ restraining pressure.

capacity; consequently, the center member was cut flush with the top of the side members and a steel block was used to distribute the load to the center piece (Fig. 3c).

## Experimental Design

Table 2 provides an overview of the scope of this study. The study was divided into three phases, each designed to evaluate variables expected to have a significant influence on joint behavior:

Phase I: a 2x2 design consisting of two joint fabrication methods and two plate sizes.

Phase II: a 1x4 design consisting of four levels of test joint confinement.

Phase III: a 3x2x2 design consisting of three species/specific gravity groups, two plate types, and two load-to-grain orientations (perpendicular and parallel).

The joint specimen size (7.25 in. square) combined with the 16-ft lumber length permitted matched samples for each test variation within a given test phase. The three pieces needed for each test joint were randomly selected from 24 pieces cut from a single board. Therefore, each board provided enough wood for eight test joints. The test joints from a single board were equally distributed among the four joint configurations within a single phase-species group. In addition to permitting matched sample comparisons, this approach also insured that the distribution of wood specific gravity within each group was similar.

A set of control joint tests was included within each test phase. In each case, the control joint configuration consisted of two 20-gauge galvanized 4x5 STPs pressed into Southern Pine wood blocks using the two-stage pressing method. These joints were oriented for application of load perpendicular to the grain of the wood, they were tested with no lateral confinement other than bearing friction.

Twenty-two joints were tested for each joint configuration, giving a total of 440 joints. The sample size of 22 was selected to provide an adequate basis for evaluating the variability as well as the mean performance of each STP joint design.

## Lumber Preparation and Joint Fabrication

Lumber variations were confined to species differences, including modulus of elasticity (MOE) and specific gravity (SG). The lumber was selected to be relatively free of knots and cross grain. After delivery, it was conditioned to a uniform moisture content of 12 percent. The MOE of each board was then determined on the basis of natural frequency of vibration in flatwise bending over a 15-ft span. Each board was then marked and cut to yield 24 reasonably knot-free 7.25-in-long pieces and two SG samples. One-inch SG samples were

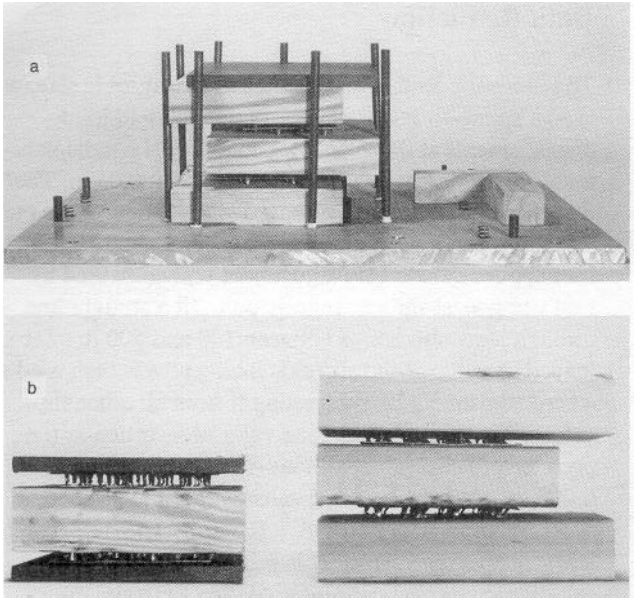


***Figure 4—Joint fabrication method (a) One-stage: two STPs were sandwiched between wood members and pressed in a single operation: (b) two-stage: STPs were first pressed onto center member, and outside members were then pressed onto center one. (M91 0141-4, 0141-5)***

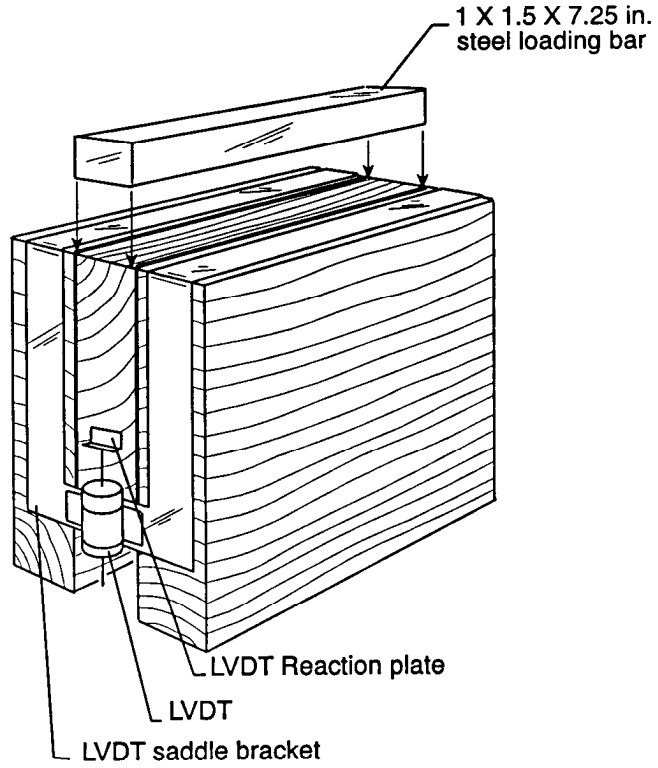


***Figure 5—Test setup used to measure average block shear deformation.***

taken close to the ends of each board. The SG values were determined according to ASTM D2395 Method A and converted to dry weight/dry volume measure using the SG-moisture relations shown in Figure 1 of that standard.

The majority of joints were fabricated using the two-stage pressing method; 44 joints for phase I were made using one-stage pressing. For two-stage pressing, plates were pressed into opposite faces of the middle member using the perforated platen (Fig. 4a), followed by pressing the side members onto the plated middle section. The 44 one-stage joints were pressed by stacking the three wood pieces and two STPs, and then pressing them together (Fig. 4b). For both one- and two-stage pressing, an alignment jig was used to keep pieces from rotating as the joints were pressed.

For all joints tested in phases I and II, the wood grain direction was oriented perpendicular to the load direction. For phase III, half the joints were fabricated with the wood grain oriented parallel to the load direction. Following assembly, all specimens were returned to the conditioning chamber for at least 7 days before testing.

## Test Procedures

Test procedures were generally the same for all three phases. Phase II was slightly different than phases I and III in that it was concerned primarily with test joint boundary conditions rather than fabrication and material property variations. Although the basic methods for measuring joint load and displacement were the same in all phases, phase II joints were tested with varying side member restraint conditions, which affected their mode of failure as well as load-slip characteristics.

Joint stiffness and strength were tested using a double-block shear test similar to that recommended in the ASTM D 1761 standard test for bolts and timber connectors loaded parallel to grain. The joint was mounted in a universal testing machine and loads were applied through a 10,000-lb load cell to the middle piece via a l-in-thick by 1.5in.-wide by 7.25in-long steel bar. Two linear variable differential transducers (LVDTs) mounted on a bracket that saddled the two outer pieces (Fig. 5) permitted measurement of displacement at the bottom of the middle piece relative to the tops of the two side pieces. In this way, the slip readings were isolated from stressed regions of the wood, consequently, only the average displacement resulting from joint slip was measured. An attempt was made to set the vertical load rate so that failures occurred in 5 to 10 min; however, many samples failed in 3 to 5 min.

Confinement effects on joint stiffness and strength, considered in phase II, required a special apparatus designed to control joint confinement pressure. Details of this apparatus are given in Appendix A. Joints were tested in the apparatus under high lateral pressure

(approximately 40 lb/in$^2$ over the joint interface area of 40 in$^2$), low lateral pressure (approximately 20 lb/in$^2$), and no active lateral pressure. Joints tested in the apparatus were compared to a fourth group tested outside the apparatus with bearing friction on the test machine bed as the sole source of confinement.

The lateral restraining pressure in the confinement apparatus was held constant throughout the test. Pressure was monitored using a pressure transducer that converted line pressure to an electric signal. In addition, two LVDTs were used to monitor separation of the inside and outside platens.

Output from the LVDTs, the load cell, and the pressure transducer (used in phase II to monitor lateral restraining force) was recorded on floppy disk using a microcomputer-based data acquisition system. The computer recorded load and displacement data at 1 -s intervals. For tests lasting 3 to 10 min, this resulted in data files consisting of 180 to 600 data points/channel. Although these data were more than was necessary to characterize the shape of the load-slip curves, they provided some assurance that critical points in the test would not be missed.

### Joint Identification

To facilitate data handling, all test joints were given an identification code that differentiated the study phases as well as test variations within each phase. For phase I, the first two digits (25 or 45) designate plate size (2x5 or 4x5) and the third digit the number of pressing stages used in joint fabrication (1 or 2). For phase II, tests are designated AI-II (apparatus high pressure), ALO (apparatus low pressure), ANO (apparatus no active pressure), and WOA (without apparatus). For phase III, the three test variables required a three-part code designation. The fast part designates the species used Southern Pine is designated SP; Douglas Fir, DF; and Spruce-Pine-Fir, SPF. The second part designates plate type: S for stainless steel and G for galvanized steel. The last part designates the direction of applied load: E for perpendicular to grain and A for parallel to grain.

Although they have different designations, the 45-2 joints in phase I, the WOA joints in phase II, and the SP-G-E joints in phase III are identical in design in that they were fabricated using Southern Pine and 4x5 galvanized steel plates, assembled using the two-stage pressing process, and loaded perpendicular to the grain of the wood without the use of the confinement apparatus. These joints served as the control samples for the three test phases.

### Data Reduction

To reduce the load-slip data files to manageable size, we used a spline-fit interpolation routine to yield joint displacements at 0.005in. increments of shear displacement, beginning at 0.000 in. and ending at 0.05 in. The data were "zeroed" (i.e., adjusted) to account for the fact that the LVDTs were not exactly at zero when load was first applied. The origin adjustment was computed by first using least squares regression to fit a straight line through load-slip points between 100 and 500 lb total load. The value of the slip axis intercept was then used as a zero adjustment by subtracting it from all other slip values. To determine the load value at a particular (i.e., preselected) slip value, all load-slip points within 0.005 in. of the preselected value were fit to a second-order polynomial (Load = A + B(Slip) + C(Slip)$^2$) using least squares regression. This procedure was judged superior to simple linear interpolation for estimating loads at prescribed slips. In addition to representing the shape of the load-slip curve, the second-order polynomial regression involved at least five points on either side of the prescribed slip. With this many points, small fluctuations in the data resulting from electrical noise were smoothed out.

Test values used for comparing joint shear resistance are expressed in terms of the load per plug on the STP plate. These values are referenced as a means of comparing the two plate sizes tested in phase I and providing some basis for judging the efficacy of extrapolating to other plate sizes. The values were derived assuming that at any point during the test, half the applied load was uniformly distributed to the plugs protruding from each surface of each STP. The load per plug is therefore half the total load divided by the number of plugs protruding from one surface (10 for the 4x5 plates and 5 for the 2x5 plates).

## Results

The data fall into four basic categories: material properties, joint fabrication, joint load-slip relationships, and failure mechanisms. Material property and fabrication data discussed in this section are limited to those parameters that appeared to have a significant effect on joint shear resistance.

### Material Properties

The wood property commonly recognized as having the greatest effect on connector performance is specific gravity (SG). This is evidenced by the fact that wood SG values are required when using the National Design Specification (NDS) (NFPA 1991) to calculate the allowable design load for any mechanical connection.

The SG value tabulated in the NDS for each wood species is an average value. Although SG variation within a given species may give a range of fastener holding capability, it is normally not feasible to account for within-species variations in SG when assigning fastener values.

The average material SG determined on the basis of dry weight/dry volume (0 percent moisture content) was slightly higher than the NDS values. Douglas Fir had an average SG of 0.57 with a coefficient of variation (COV) of 15 percent, Southern Pine an average of 0.60 with a COV of 9 percent, and Spruce-Pine-Fir an average of 0.43 with a COV of 11 percent. The SG values listed in the NDS for Douglas Fir-Larch, Southern Pine, and Spruce-Pine-Fir, are 0.51, 0.55, and 0.42, respectively.

The SG samples taken from the ends of each board indicated that within-board variation in SG was species-dependent but may not be much less than the between-board variation for a given lumber sample. Douglas Fir samples showed the least within-board SG variation and Spruce-Pine-Fir the greatest. In each case, the largest within-board SG ratio was 85 percent of the ratio of maximum-to-minimum average SG found for all boards in the sample.

The average MOE values measured for samples taken from the test boards were on the high side of NDS values. Douglas Fir had an average MOE of 1.9 x $10^6$ lb/in$^2$ with a COV of 19 percent compared to published values of 1.7 x $10^6$ lb/in$^2$ for No. 2 lumber and 1.8 x $10^6$ lb/in$^2$ for No. 1 lumber. Southern Pine had an average MOE of 2.3 x $10^6$ lb/in$^2$ with a COV of 15 percent compared to its grade value of 1.9 x $10^6$ lb/in$^2$. The Spruce-Pine-Fir average MOE was 1.5 x $10^6$ lb/in$^2$, equal to the published value for No. 1 lumber. The Spruce-Pine-Fir COV was 15 percent. The plot of MOE against SG apparently indicates a positive correlation between these two parameters, suggesting that lumber MOE could also be used to assign allowable properties for shear connectors (Fig. 6).

In addition to SG and MOE, several physical characteristics of the wood specimens created some problems in the fabrication and testing of the STP joints. The Douglas Fir specimens were cut from lumber that had been surfaced and shipped in the wet condition. By the time the wood dried, the width dimension was closer to 7 in. than 7.25 in. and many boards had a slight cup. The size variation led to slight variations in plate placement as a result of a loose fit in the alignment jig. The cupping was sufficient to warrant the use of wood shims to hold the surface horizontal and to minimize perpendicular-to-grain tension cracks while the plates were pressed. Because of limits on the size of trees cut to yield the

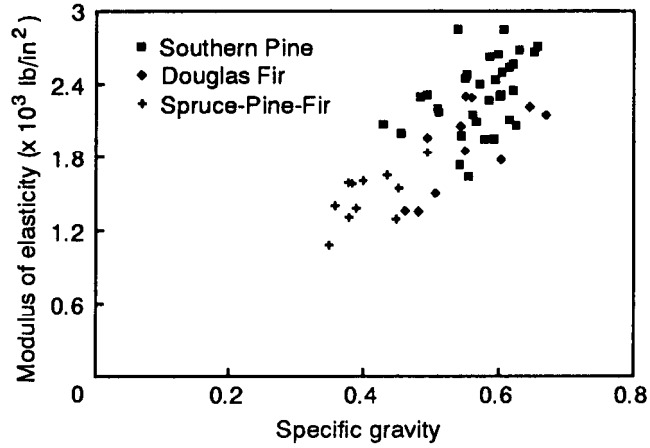


***Figure 6—MOE compared to SG for all test boards; data include Southern Pine, Douglas Fir, and Spruce-Pine-Fir.***

lumber, most boards contained some pith-associated wood and annual rings that were not parallel or perpendicular to any surface. When allowable bearing loads for test samples were exceeded, the springwood acted as a weak shear plane causing the wood to deform asymmetrically. These variations in physical properties present a possible source of variation in STP joint strength.

## Joint Fabrication

Phase I observations related to fabrication requirements and joint quality showed that the one-stage method required higher pressing force and distorted the plate surface, thus detracting from joint quality (Figs. 7 and 8). Load-embedment curves for the one- and two-stage pressing methods (Fig. 7) show that in addition to the greater pressing stroke required for the one-stage fabrication, a greater force was also required for a tight joint. The average maximum load required for a tight joint for a 4x5 plate using the two-stage pressing method was 11,300 lb (1,130 lb/plug) compared to 18,800 lb for the one-stage method. Plate distortion, caused by offset tooth forces acting in opposite directions during one-stage pressing, necessitated higher final loads to reflatten the plate and obtain a tight joint. In those cases where the joint members began to emit cracking sounds during pressing, the loading was stopped. After the load was released, the one-stage joints were still not as tight as the two-stage joints. Figure 8 shows the amount of plate distortion associated with one-stage pressing.

Plate distortion appeared to be greater for the 4x5 plate than for the 2x5 plate. This greater distortion was accentuated when the plates were pressed into dense material. When the plate surface rippled, it caused some metal bending at the base of the teeth. Coupled with the

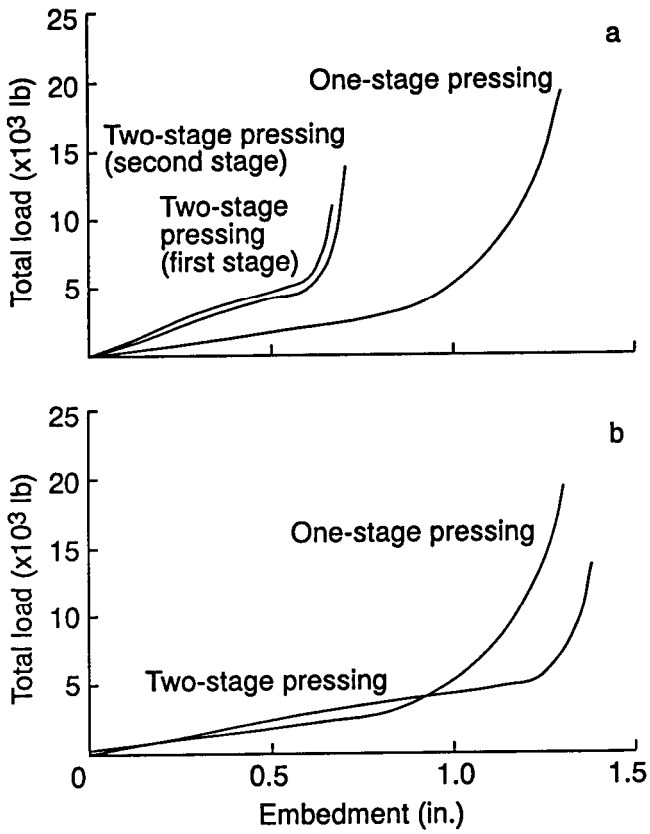


***Figure 7—Load-embedment curves for one-stage and two-stage pressing. Area under curves gives total energy required Initial slope is force per inch of embedment; final slope is compression perpendicular-to-grain stiffness of wood***

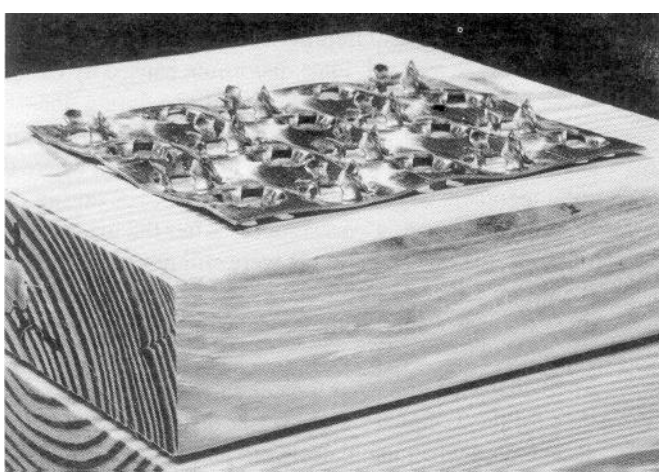

***Figure 8—Rippled plate surface resulting from one-stage pressing. (M90 0180-13)***

greater force needed to push the teeth into dense wood, this caused teeth to buckle rather than penetrate the wood surface. Pressing force requirements related to wood density were especially noticeable when comparing fabrication of the Southern pine and Spruce-Pine-Fir specimens.

## Joint Tests

Results of the tests of 20 lateral shear joint configurations listed in Table 2 are summarized in Tables 3 through 8 and in Appendix B. Load values in these tables are expressed in terms of load per plug to facilitate comparison across plate size. The values represent a summary of the results of all tests conducted within each cell of the experimental design. The tables summarize loads at 0.005-in and 0.03-in. slip to provide some basis for evaluating initial stiffness and joint strength, corresponding to the traditional connection-slip limit state. They also list maximum load and slip at maximum load. Table 8 gives joint strength in both absolute and relative terms. Absolute values are given as the average load per plug at maximum shear on the joint; relative values are a multiple of the control test values. The greatest per plug load occurred for the 2x5 plate; however, all values were still normalized using average results of the control test configuration because all other joint configurations were tested using the 4x5 plate. Appendix B tables give the average load-slip curves measured in increments of 0.005 in. from 0.005- to 0.05-in. slip for each joint configuration.

Table 3—Results of phase I tests: effects of STP size and pressing: method

| Joint[a] | Load or slip Avg | Min | Max | COV (%) | 90% confidence on mean |
|---|---|---|---|---|---|
| | Load at 0.005 in. (lb) | | | | |
| 25-l | 114 | 54 | 165 | 22 | 105 - 123 |
| 25-2 | 124 | 87 | 172 | 19 | 115 -133 |
| 45-1 | 136 | 85 | 175 | 20 | 126 - 146 |
| 45-2 | 165 | 117 | 227 | 22 | 152 - 178 |
| | Load at 0.03 in. (lb) | | | | |
| 25-1 | 357 | 231 | 426 | 13 | 339 - 375 |
| 25-2 | 415 | 340 | 499 | 10 | 400 - 430 |
| 45-l | 307 | 249 | 361 | 10 | 296 - 318 |
| 45-2 | 382 | 338 | 446 | 8 | 371 - 393 |
| | Maximum load (lb) | | | | |
| 25-1 | 492 | 365 | 568 | 10 | 474 - 509 |
| 25-2 | 558 | 466 | 628 | 8 | 542 - 574 |
| 45-1 | 381 | 307 | 428 | 8 | 369 - 392 |
| 45-2 | 447 | 364 | 489 | 7 | 436 - 459 |
| | Slip at maximum load (in.) | | | | |
| 25-1 | 0.109 | 0.079 | 0.140 | 15 | 0.103 - 0.114 |
| 25-2 | 0.111 | 0.082 | 0.147 | 14 | 0.105 - 0.116 |
| 45-1 | 0.101 | 0.075 | 0.134 | 16 | 0.095 - 0.107 |
| 45-2 | 0.095 | 0.048 | 0.150 | 25 | 0.086 - 0.103 |

[a]MOE ranged from 1.7 to 2.8 x $10^6$ lb/in$^2$ with average of 2.3 x $10^6$ lb/in$^2$ and coefficient of variation (COV) of 14%. Specific gravity ranged from 0.49 to 0.62 with a COV of 8%.

**Table 4—Effect of confinement on joint strength[a]**

| Confine-ment | Count | Load or slip Avg | Min | Max | COV (%) | 90% confidence on mean |
|---|---|---|---|---|---|---|
| | | Load at 0.005 in. slip (lb) | | | | |
| AHI | 22 | 100 | 57 | 157 | 34 | 41 - 158 |
| ALO | 22 | 103 | 66 | 158 | 27 | 55 - 151 |
| ANO | 21 | 93 | 58 | 146 | 24 | 54 - 132 |
| WOA | 22 | 190 | 115 | 275 | 21 | 121 - 258 |
| | | Load at 0.03 in. slip (lb) | | | | |
| AHI | 20 | 398 | 297 | 474 | 10 | 328 - 468 |
| ALO | 22 | 363 | 282 | 424 | 12 | 285 - 441 |
| ANO | 21 | 212 | 156 | 265 | 15 | 158 - 267 |
| WOA | 21 | 390 | 319 | 462 | 11 | 316 - 465 |
| | | Maximum load (lb) | | | | |
| AHI | 22 | 484 | 308 | 558 | 11 | 392 - 576 |
| ALO | 22 | 440 | 397 | 511 | 7 | 383 - 497 |
| ANO | 21 | 266 | 175 | 309 | 13 | 208 - 324 |
| WOA | 22 | 449 | 369 | 526 | 9 | 379 - 518 |
| | | Slip at maximum load (in.) | | | | |
| AHI | 22 | 0.09 | 0.01 | 0.15 | 38 | 0.03 - 0.15 |
| ALO | 22 | 0.08 | 0.04 | 0.12 | 29 | 0.04 - 0.13 |
| ANO | 21 | 0.07 | 0.05 | 0.09 | 15 | 0.05 - 0.09 |
| WOA | 22 | 0.08 | 0.02 | 0.12 | 29 | 0.04 - 0.13 |

[a]MOE ranged from 2.0 to 2.9 x $10^6$ lb/in$^2$ with average of 2.4 x $10^6$ lb/m$^2$ and COV of 9%. Specific gravity ranged from 0.46 to 0.65 with average of 0.56 and COV of 10%.

**Table 5—Results of phase III tests: effects of plate type and load-to-grain orientation on Southern Pine**

| Joint | Property Avg | Min | Max | COV (%) | 90% confidence on mean |
|---|---|---|---|---|---|
| | | Load at 0.005 in. slip (lb) | | | |
| SE | 130 | 82 | 202 | 20 | 85 - 176 |
| GE | 191 | 124 | 261 | 21 | 122 - 260 |
| SA | 104 | 74 | 177 | 24 | 62 - 147 |
| GA | 133 | 51 | 199 | 24 | 78 - 189 |
| | | Load at 0.03 in. slip (lb) | | | |
| SE | 367 | 321 | 430 | 8 | 316 - 418 |
| GE | 408 | 369 | 485 | 8 | 354 - 463 |
| SA | 348 | 300 | 398 | 8 | 303 - 394 |
| GA | 393 | 318 | 455 | 7 | 343 - 443 |
| | | Maximum load (lb) | | | |
| SE | 511 | 439 | 572 | 6 | 462 - 560 |
| GE | 470 | 422 | 556 | 7 | 409 - 530 |
| SA | 488 | 426 | 527 | 7 | 433 - 542 |
| GA | 472 | 407 | 521 | 5 | 427 - 516 |
| | | Slip at maximum load (in.) | | | |
| SE | 0.13 | 0.09 | 0.16 | 14 | 0.10 - 0.16 |
| GE | 0.09 | 0.06 | 0.12 | 16 | 0.06 - 0.11 |
| SA | 0.13 | 0.10 | 0.17 | 15 | 0.10 - 0.16 |
| GA | 0.10 | 0.07 | 0.14 | 19 | 0.07 - 0.13 |
| | | Modulus of elasticity (lb/in$^2$) | | | |
| All | 2.3E +06 | 1.6E +06 | 2.7E +06 | 15 | 1.7E +06 to 2.8E +06 |
| | | Specific gravity | | | |
| All | 0.59 | 0.54 | 0.66 | 5 | 0.54 - 0.64 |

**Table 6—Results of phase III tests effects of plate type and load-to-grain orientation on Douglas Fir**

| Joint | Count | Load or slip Avg | Min | Max | COV (%) | 90% confidence on mean |
|---|---|---|---|---|---|---|
| | | Load at 0.005 in. slip (lb) | | | | |
| SE | 22 | 132 | 57 | 242 | 42 | 36 - 227 |
| GE | 22 | 157 | 64 | 271 | 35 | 62 - 252 |
| SA | 21 | 103 | 72 | 157 | 30 | 49 - 157 |
| GA | 22 | 131 | 58 | 183 | 24 | 76 - 186 |
| | | Load at 0.03 in. slip (lb) | | | | |
| SE | 22 | 320 | 229 | 441 | 17 | 226 - 414 |
| GE | 22 | 355 | 268 | 409 | 11 | 291 - 419 |
| SA | 21 | 305 | 243 | 395 | 11 | 248 - 363 |
| GA | 22 | 351 | 299 | 390 | 7 | 310 - 392 |
| | | Maximum load (lb) | | | | |
| SE | 22 | 452 | 344 | 535 | 12 | 360 - 545 |
| GE | 22 | 448 | 350 | 544 | 12 | 357 - 539 |
| SA | 21 | 501 | 458 | 560 | 5 | 454 - 549 |
| GA | 22 | 500 | 423 | 573 | 7 | 442 - 558 |
| | | Slip at maximum load (in.) | | | | |
| SE | 22 | 0.13 | 0.09 | 0.19 | 21 | 0.08 - 0.18 |
| GE | 22 | 0.10 | 0.05 | 0.17 | 27 | 0.05 - 0.15 |
| SA | 21 | 0.20 | 0.14 | 0.25 | 15 | 0.14 - 0.25 |
| GA | 22 | 0.15 | 0.05 | 0.17 | 16 | 0.11 - 0.19 |
| | | Modulus of elasticity (lb/in$^2$) | | | | |
| All | | 1.9E +06 | 1.4E +06 | 2.3E +06 | 18 | 1.9E +06 to 1.9E +06 |
| | | Specific gravity | | | | |
| All | | 0.55 | 0.46 | 0.67 | 12 | 0.44 - 0.66 |

**Table 7—Results of phase III tests: effects of plate type and load-to-grain orientation on Spruce-Pine-Fir**

| Joint | Count | Property Avg | Mm | Max | COV (%) | 90% confidence on mean |
|---|---|---|---|---|---|---|
| | | Load at 0.005 in. slip (lb) | | | | |
| SE | 22 | 78 | 35 | 173 | 40 | 24 - 133 |
| GE | 22 | 111 | 57 | 168 | 29 | 55 - 166 |
| SA | 22 | 51 | 29 | 89 | 27 | 27 - 74 |
| GA | 22 | 77 | 31 | 127 | 30 | 37 - 117 |
| | | Load at 0.03 in. slip (lb) | | | | |
| SE | 22 | 220 | 131 | 330 | 22 | 136 - 304 |
| GE | 22 | 255 | 190 | 306 | 12 | 201 - 309 |
| SA | 22 | 183 | 106 | 265 | 19 | 122 - 244 |
| GA | 22 | 255 | 182 | 324 | 13 | 199 - 311 |
| | | Maximum load (lb) | | | | |
| SE | 22 | 360 | 279 | 439 | 13 | 281 - 439 |
| GE | 22 | 359 | 302 | 445 | 10 | 294 - 423 |
| SA | 22 | 337 | 225 | 447 | 15 | 249 - 425 |
| GA | 22 | 380 | 304 | 450 | 8 | 326 - 434 |
| | | Slip at maximum load (in.) | | | | |
| SE | 22 | 0.15 | 0.09 | 0.21 | 17 | 0.11 - 0.20 |
| GE | 22 | 0.13 | 0.06 | 0.19 | 23 | 0.08 - 0.18 |
| SA | 22 | 0.19 | 0.14 | 0.24 | 15 | 0.14 - 0.24 |
| GA | 22 | 0.13 | 0.11 | 0.15 | 8 | 0.12 - 0.15 |
| | | Modulus of elasticity (lb/in$^2$) | | | | |
| All | | 1.5E +06 | 1.1E +06 | 1.8E +06 | 4 | 1.1E +06 to 1.8E +06 |
| | | Specific gravity | | | | |
| All | | 0.41 | 0.35 | 0.49 | 11 | 0.33 - 0.48 |

**Table 8—Results of control tests**

| Phase | Code | Load or slip Avg | Min | Max | COV (%) | 90% confidence on mean |
|---|---|---|---|---|---|---|
| | | Load at 0.005 in. slip (lb) | | | | |
| I | 45-2 | 165 | 117 | 227 | 22 | 152 - 178 |
| II | WOA | 190 | 115 | 275 | 21 | 121- 258 |
| II | SP-G-E | 191 | 124 | 261 | 21 | 122 - 260 |
| | Total | 182 | 115 | 275 | 22 | 174 - 190 |
| | | Load at 0.03 in. slip (lb) | | | | |
| I | 45-2 | 382 | 338 | 446 | 8 | 371 - 393 |
| II | WOA | 390 | 319 | 462 | 11 | 316 - 465 |
| III | SP-G-E | 408 | 369 | 485 | 8 | 354 - 463 |
| | Total | 394 | 319 | 485 | 9 | 386 - 401 |
| | | Maximum load (lb) | | | | |
| I | 45-2 | 447 | 364 | 489 | 7 | 436 - 459 |
| II | WOA | 449 | 369 | 526 | 9 | 379 - 518 |
| III | SP-G-E | 470 | 422 | 556 | 7 | 409 - 530 |
| | Total | 455 | 364 | 556 | 8 | 448 - 463 |
| | | Slip at maximum load (in.) | | | | |
| I | 45-2 | 0.095 | 0.048 | 0.150 | 25 | 0.086 - 0.103 |
| II | WOA | 0.083 | 0.025 | 0.120 | 29 | 0.041 - 0.126 |
| III | SP-G-E | 0.088 | 0.061 | 0.116 | 16 | 0.064 - 0.113 |
| | Total | 0.089 | 0.025 | 0.150 | 24 | 0.084 - 0.093 |

Tables 3 through 7 contain statistics for joints tested in phases I through III. Table 8 contains statistics for the control groups from phases I, II, and III (i.e., groups 45-2, WOA, and SP-G-E, respectively). Although the phase I test appeared to hold lower average load at 0.005- and 0.03-m displacement, the difference was not significant at the 90-percent confidence level. These results confirm the continuity in fabrication and testing procedures between the test phases.

Joint failures involved a combination of tooth withdrawal, tooth bending, wood bearing deformation around the teeth, and tearing of wood fibers from the surface of the wood. The predominant failure mechanism was influenced by the test boundary conditions, plate material, species, and joint fabrication method. The majority of test failures were primarily due to tooth bending and withdrawal accompanied by bearing deformation of the wood under the teeth. When loads were applied perpendicular to the grain of the wood, failures included some tearing of wood fibers from the surface in tension perpendicular to the grain (Fig. 9).

## Phase I

Two-stage pressing gave higher joint strength and stiffness than did one-stage pressing, but the difference was overshadowed by the strength advantage of 2x5 plates over 4x5 plates. Figure 10 gives the average load-slip curves for the four test joint variations considered in phase I. For each plate size, two-stage pressing gave superior connections. When evaluated on a per plug basis, however, the strength advantage of using a 2x5 plate was greater than the disadvantage of the pressing method. Thus, 2x5 plate connections pressed by the one-stage method had a higher per plug shear capacity than did 4x5 plate connections pressed by the two-stage method.

The observed effect of plate size may have been due in part to the relative size of plates and wood members. Both plates appeared to have comparable per plug loads at low displacement levels, but the 4x5 plate reached a

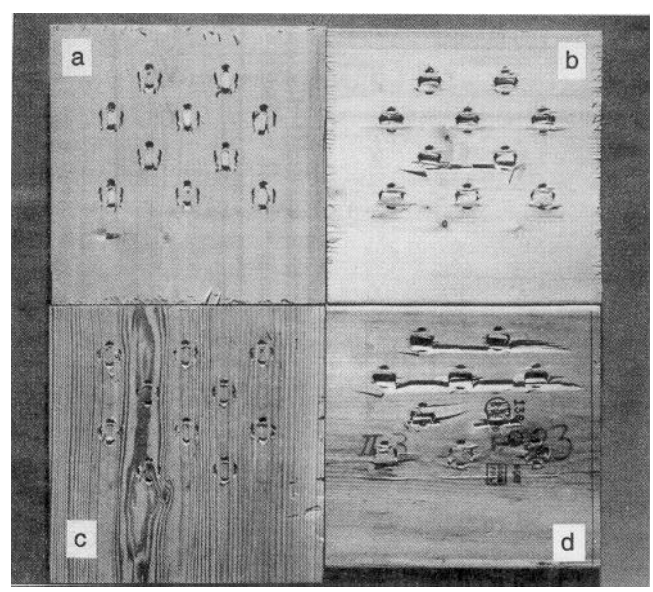


***Figure 9—Deformation patterns in low (a, b) and high (c,d) density material when loads were applied parallel (a,c) and perpendicular (b,d) to the grain. (M91 0141-42)***

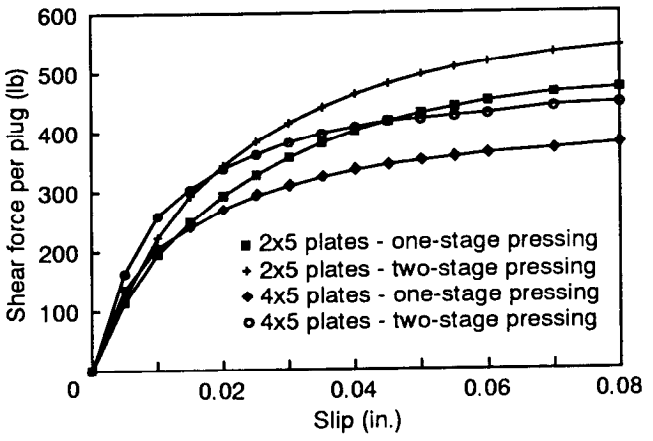


*Figure 10—Average load-slip curves for tests in phase I. Loads are expressed in load per plug to facilitate evaluation of plate size effects.*

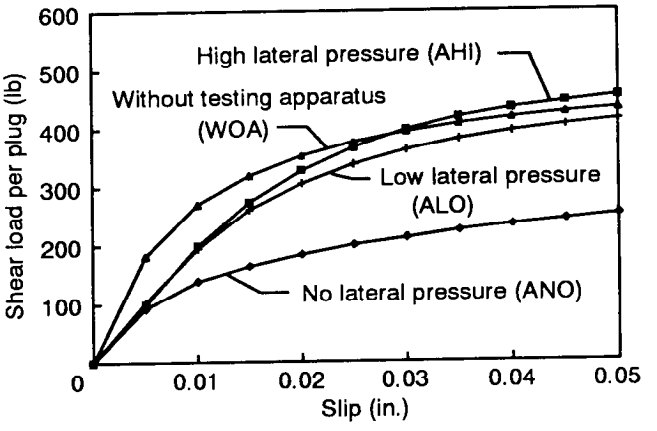


*Figure 11—Average load-slip curves for tests in phase II. Although confinement did have a significant effect on joint capacity, the effect of increased pressure did not appear to be significant in the range of 20 to 40 lb/in$^2$.*

threshold sooner than did the 2x5 plate. The 2x5 plate centered on a 7x5 area was more likely to receive a uniform load per tooth than a 4x5 plate on the same area. Plug end distance was roughly 0.75 in. for the 4x5 plates and 1.5 in. for the 2x5 plates.

**Phase II**

The confinement comparisons made in phase II (Fig. 11) demonstrated the important influence of boundary conditions on joint stiffness and strength. Failure modes for the test joint varied with level of confinement, as shown in Figure 12. Using a three-block shear test, loads applied to the middle block were transferred through the STP to the inside surface of the outer blocks. The shear load on the inner face of the side member, counteracted by the resultant reaction forces distributed across the thickness dimension at the base of the member, formed a couple that tended to rotate the outer laminations away from each other on the bottom. For the unconfined shear block, this outward thrust was resisted by bearing friction (Fig. 12a) and the shear planes tended to remain vertical as plate teeth were sheared from the surface. When a joint was tested under high lateral confinement, the STP shear capacity actually exceeded the compression perpendicular-to-grain strength of the wood in some cases. When this happened, the middle member often exhibited a rolling shear between annual rings. Bulging deformation of this member actually pushed the two side members away at the top (Fig. 12b). When a test sample was placed on rollers, as in the confinement apparatus, there was no longer a bearing friction force to resist the outward thrust and the joint had a tendency to open at the bottom (Fig. 11c), causing shear stiffness to drop off as a result of increased bending moment on plate teeth and loss in surface friction.

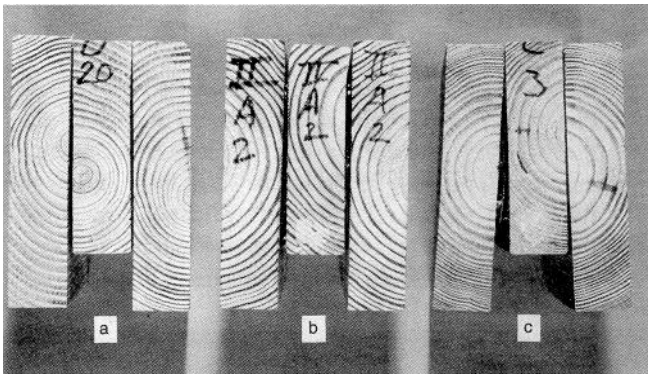


*Figure 12—Joint deformation patterns were dependent on confinement conditions and specific gravity of lumber. (a) Tests conducted outside confinement apparatus were restrained by bearing friction at bottom of side members; (b) in confinement apparatus with no active pressure, eccentric loads on side members caused them to spread apart at bottom: (c) under active confinement pressure, shear resistance of 4x5 plates exceeded the compression perpendicular-to-grain resistance of center block, causing compression and rolling shear failures to push joints apart at top. (M91 0141-43)*

Several samples tested in phase II exhibited displacement problems that resulted in the termination of the test prior to reaching maximum load. Problems included in-plane rotation of the middle member in a joint in the unconfined test group and rolling shear failures in the 40-lb/in$^2$ confinement test group. A total of three joints had to be removed from the test data, leaving 22 specimens for the tests outside the apparatus and the 20-lb/in$^2$ confinement condition, 21 specimens for tests with no confinement, and 20 specimens for the 40-lb/in$^2$ group.

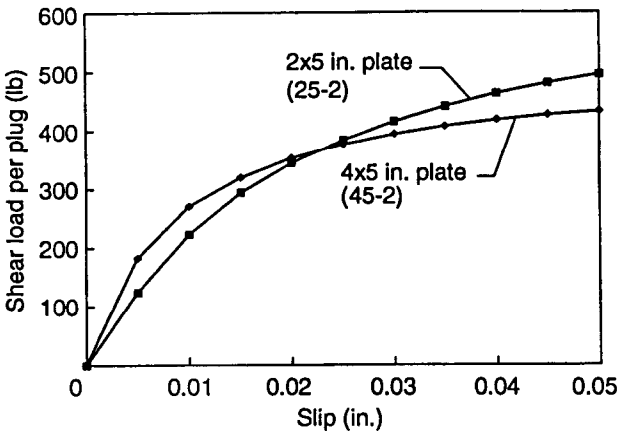


*Figure 13—Average per plug load-slip curves for 4x5 plates compared to 2x5 plates. The 2x5 plug carried less load up to displacement of about 0.011 in. (0.022 in. for joint). Beyond that point, 2x5 plugs carried greater shear load than 4x5 plugs. This was partially due to a difference in stresses in connected wood members.*

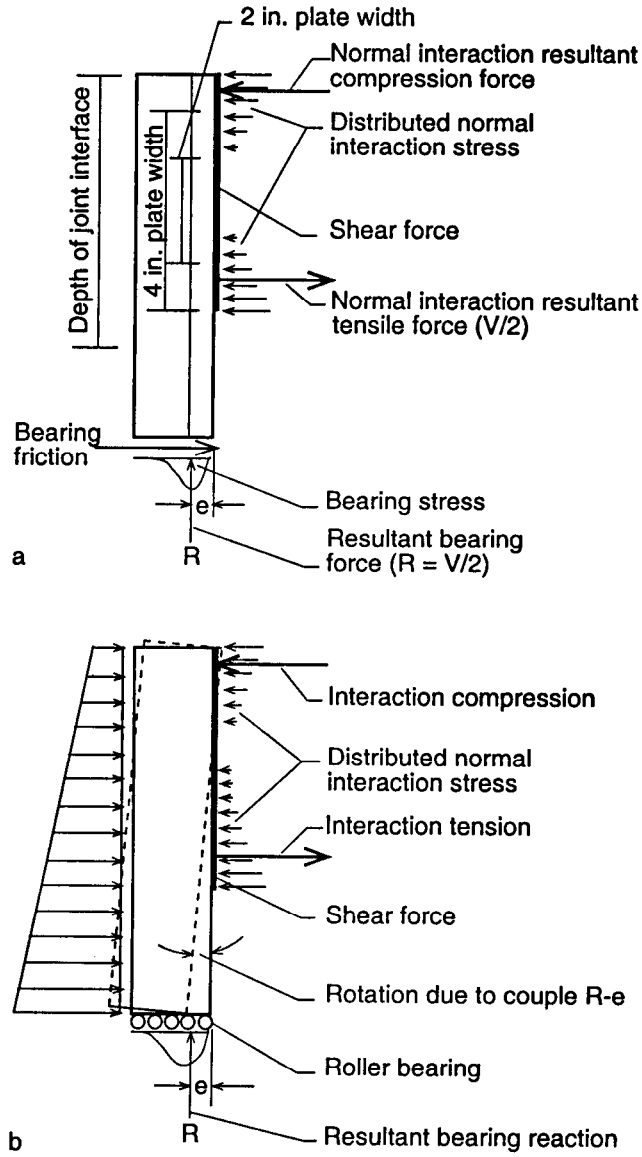


*Figure 14—Schematic of static forces on side member resulting from applied shear load and test boundary conditions under block shear test outside and inside confinement apparatus.*

**Phase III**

Effects of plate type and orientation varied with species. Plate type had a definite effect on strength of Southern Pine (Fig. 13) and Spruce-Pine-Fir joints, but little effect on strength of Douglas Fir joints. Load-to-grain orientation, however, had relatively little effect on strength of Southern Pine (Fig. 14) and Spruce-Pine-Fir joints and a greater effect on Douglas Fir joint strength.

Although wood crushing played a role in all tests (Fig. 9), it was most noticeable in joints fabricated with low SG material and stainless steel plates. Stainless steel plate teeth had less tendency to bend than galvanized teeth and were more likely to compress the wood in the bearing area. In some cases, where load was applied perpendicular to the grain, splinters of wood were torn from the surface by the plates, suggesting that tension perpendicular to the grain may play some role in defining joint shear capacity.

# Analysis

The primary value of this study is its assessment of the sensitivity of joint behavior to variations in joint fabrication methods and assembly boundary conditions. To relate joint test results to expected field performance, it is important to keep in mind how the test values were derived and how differences between test and field conditions influenced joint performance. This analysis, which focuses on joint behavior under pure shear, shows that joint fabrication, configuration, and boundary conditions have a significant effect on stiffness and strength of STP connections.

Within each phase of the study, joint strength and stiffness distributions were evaluated using three procedures. First, distributions of stiffness and strength were evaluated within each test cell. This provided a basis for evaluating variable effects on joint mean performance and variability. Second, an analysis of variance (ANOVA) was conducted within each test cell, taking advantage of end-matched samples to assess the effects of board variations as well as that of target variables on joint performance. Finally, nonlinear least squares regression methods were used to characterize average joint behavior and to relate joint behavior to SG variations.

In addition to allowing the comparison of load and slip characteristics, observation of failure mechanisms provided some insight to the importance of proper fabrication methods and joint boundary conditions.

## Analysis of Variance

To facilitate the assessment of variable effects on joint strength and stiffness, an ANOVA was used to compare test results within each study phase. Prior to running the ANOVA, the distributions of test results were evaluated for normality to judge the potential error in using standard *F* and *t* cumulative distribution functions as a basis for assessing the significance of variable effects on joint strength and stiffness. The ANOVA was used to evaluate effects of between-board variations and SG as well as the effects of the primary variables targeted in each study phase.

The distribution of residuals for the combined sample was evaluated for normal distribution fit using the Wilks-Shapiro test. Test results for each joint configuration within a study phase were initially grouped to give a large enough sample population to characterize distributions of residuals for maximum strength, slip at maximum load, and load at 0.03-in. and 0.015-in. shear displacement. Results of this analysis showed that phase I and III tests all fit the normal distribution assumptions, but there were some problems in phase II. On the basis of all tests conducted in phase II, the residuals for load at 0.015- and 0.03-in. displacement did not appear to be normally distributed. When each confinement condition was evaluated separately, load at 0.015-in. displacement appeared to be normal for all test conditions except the 40-lb/in$^2$ confinement condition. At 0.03-in. displacement, confinement tests conducted outside the confinemement apparatus appeared to be the only sample for which the normal fit was questionable.

Of the 20 cells, or variable combinations tested in this study, only two appeared to have a problem with the normal fit. These samples had two or three extreme values that affected the "normal fit." For the majority of samples, we felt that the use of the *F*-test and *t*-test was appropriate as a means of evaluating variable interactions.

By providing a basis for assessing the importance of each test variable, the ANOVA led to recommendations for factors to consider in the design and fabrication of joints using STPs.

## Load-Slip Model

Design loads for metal plate-type connectors arc normally based either on the load at a total joint displacement of 0.03 in. or some fraction of maximum load. New methods for deriving allowable values for nailed connections are more closely tied to the shape of the load-displacement curve. For the analysis of STP performance, we chose to provide both options by fitting a closed form nonlinear function to the average load-slip curve for each joint configuration tested. This function (Eq. (1)), which is discussed in more detail in Appendix B, includes three parameters, one of which *(K)* represents the initial slope (stiffness) of the load-slip curve. This parameter was used as a means of comparing initial stiffness values of the various test joint configurations.

$$f = (P_0 + P_1\delta)(1 - \exp(-K|\delta|/P_0)) \qquad (1)$$

## Tabulation of Test Results

Appendix B data were used to characterize the composite load-slip data for each joint configuration. Table Bl gives the parameters derived using a nonlinear least squares regression to fit Equation (1) to the average joint load-slip data. Tables B2 to B6 contain minimum, average, and maximum loads derived from all tests of each configuration at displacements ranging from 0.000 in. to 0.050 in., in increments of 0.005 in. For a sample size *(n)* of 22, the minimum value observed may be assumed to represent the 10th percentile of a nonparametric distribution with 90 percent confidence. The 90-percent confidence intervals on the mean displayed in these tables is based on a Student's r-test probability density function with $v = h - 1$ based on the number of observations at each displacement level. Although 22 joints were fabricated for each cell in the study, only 21 joints were tested in two cases. In some cases, maximum loads were reached prior to 0.05 in. of shear displacement, so the number of observations at 0.05-in. displacement was not always the same as that at 0.005 in.

Joint stiffness values are compiled in Table 9 for each test joint type. These values, derived as the *K* parameter in Equation (1), are used to index the test joint variables according to their effect on test joint stiffness. In addition to *K* values, Table 9 also gives the average maximum load for each joint configuration. Values are expressed both in engineering units (lb/plug/in. of shear displacement *(K)* and lb/plug (maximum load)) and relative value, which is the multiple of the control joint value.

# Discussion

## Phase I

In phase I, the evaluation of fabrication and plate size suggests that on the basis of maximum per plug load, the advantages of the smaller plate size outweigh the disadvantages of one-stage pressing. On the average,

**Table 9—Joint stiffness and strength values derived as *K* parameter for nonlinear model fit to average load-slip curve**

| Variable | Joint | Stiffness (*K*) (lb/in) | Stiffness (*K*) (ratio) | Strength (lb/plug) | Strength (ratio) |
|---|---|---|---|---|---|
| (Control) | II-WOA | 50,790 | 1.05 | 449 | 0.99 |
| | III-SP-G-E | 50,841 | 1.05 | 470 | 1.08 |
| | I-45-2 | 43,538 | 0.90 | 447 | 0.98 |
| | Total | 482.41 | 1.00 | 455 | 1.00 |
| Species | III-DF-G-E | 41,022 | 0.85 | 448 | 0.98 |
| | III-SPF-G-E | 28,582 | 0.59 | 859 | 0.79 |
| Pressing | I-45-1 | 35,975 | 0.75 | 881 | 0.84 |
| Orientation | III-SP-G-A | 84,708 | 0.72 | 472 | 1.04 |
| Plate type | III-SP-S-E | 81,449 | 0.65 | 511 | 1.12 |
| Plate size | I-25-2 | 29,776 | 0.62 | 558 | 1.28 |
| Confine- | II-ANO | 25,122 | 0.52 | 266 | 0.58 |
| ment | II-ALO | 25,364 | 0.58 | 440 | 0.97 |
| | II-AHI | 24,601 | 0.51 | 484 | 1.06 |
| Species/ | III-DF-S-E | 82,667 | 0.68 | 452 | 0.99 |
| platen type | III-SPF-S-E | 18,536 | 0.88 | 360 | 0.79 |
| Species/ | III-DF-G-A | 82,241 | 0.67 | 500 | 1.10 |
| orientation | III-SPF-G-A | 18,352 | 0.88 | 380 | 0.88 |
| Orient/plate type | III-SP-S-A | 25,968 | 0.54 | 488 | 1.07 |
| Species/ | III-DF-S-A | 25,537 | 0.53 | 501 | 1.10 |
| orient/ plate type | III-SPF-S-A | 11,457 | 0.24 | 337 | 0.74 |
| Pressing/ plate size | I-25-1 | 26,682 | 0.55 | 492 | 1.08 |

two-stage joints were 15 percent stronger than one-stage joints; the smaller plates had 27 percent greater load capacity per plug. Therefore, the one-stage 2x5 plate joints actually had a higher maximum per plug load than the two-stage 4x5 plate joints. Variations in the actual test conditions for the two plate sixes, however, throw some doubt on the validity of this conclusion.

## Fabrication

The energy dissipated in pressing an STP joint may be assessed as the area under the load-embedment curve. Figure 7b shows average 1oad-embedment curves for one-stage as opposed to two-stage fabrication. The two-stage curve was obtained by summing displacements at incremental loads. Up to 0.9 in. total embedment, the average slope for one-stage pressing (-4,000 lb/in) was slightly less than that for two-stage pressing (5,100 lb/in), suggesting that one-stage pressing requires less energy. In one-stage pressing, however, a portion of the measured displacement is due to plate bending around the plugs, whereas in two-stage pressing, displacement is almost entirely due to tooth embedment. Beyond 0.9 in. embedment (0.25 in./plate-wood interface), the one-stage process enters a transition zone in which compression of the wood surface begins to affect the pressing force. For two-stage pressing, this does not occur until 1.25 in. embedment (0.31 in./interface). To obtain a tight joint using one-stage pressing required from 750 to 1,000 lb/m$^2$ whereas the maximum value for two-stage pressing was in the range of 400 to 500 lb/in$^2$. This difference is due to plate distortion in one-stage pressing. Near the end of the pressing cycle, one-stage pressing required higher loads to reflatten the STP and to obtain joints comparable in appearance to those attained with two-stage pressing.

Results shown in Tables 3 and 9 show that two-stage pressing resulted in joint load values that were 8 to 24 percent higher than those of the joints pressed by the one-stage method. Comparison of *K* values in Table 9 shows the two-stage 2x5 plate joints were 11 percent stiffer than the one-stage plates; the two-stage 4x5 plates were an average 21 percent stiffer than comparable one-stage plates. Loads at 0.005-in. displacement confirmed these results. As for strength, two-stage pressing resulted in average strength increases of 13 and 17 percent for the 2x5 and 4x5 plates, respectively. Measured differences were significant at the 0.05-percent level of significance. The only measured parameter not significantly affected by pressing method was the slip at maximum load (average 0.10 in.).

Lower stiffness for one-stage pressing was partially due to plate distortion, which inhibited full embedment of all the teeth. In some cases, as previously noted, plate distortion also caused some teeth to bend rather than being pressed into the wood.

### Plate Size

The 4x5 plates exhibited greater initial stiffness but a lower maximum per plug load than the 2x5 plates. The comparison of curves for 2x5 and 4x5 plates (Fig. 13) shows that the per plug load for the 4x5 plates increased faster with initial displacement but reached a lower threshold, at which time the curve began to flatten out. The results suggest that this difference is not attributable solely to plate size. Deformation of the center member during teats of 4x5 plate joints initiated a failure mode different from that observed for 2x5 plate joints. This difference in failure mode is evident in the fact that the slip values measured for the 2x5 plates at maximum load were greater than those measured for the 4x5 plates. As a result of greater lateral displacement for the 4x5 plate joints, maximum load was reached at lower slip values. To isolate the effect of plate size, the bearing area of the wood members should be increased in proportion to the plate size.

Although the 4x5 plate connections exhibited greater stiffness and strength than the 2x5 plate connections, when loads were evaluated on a per plug basis the 2x5 plates showed a significant advantage. At the 0.005-m displacement, the 4x5 plates had a greater per plug load. The ANOVA used to evaluate load at 0.015- and 0.03-in. displacement indicated no significant diference at 0.015 in. but a 12 percent advantage in favor of the 2x5 plate at 0.03 in. At maximum load, the 2x5 plates were 27 percent stronger on a per plug basis.

A possible explanation for this apparent size effect relates to the relative widths of the plate and the joint contact area. In all cases, the interface area between adjacent wood members was 5.5 in. wide. Centrally locating plates on this area provided a 0.75-in. edge margin for the 4x5 plates and a 1.75-in edge margin for the 2x5 plates. As the middle piece was loaded and the side members tended to rotate in at the top and out at the bottom, those plugs closest to the bottom edge of the joint began to withdraw, thus reducing their shear capacity. This condition was more critical for the wider plate.

## Phase II

The vertical shear load on the inside surface and reaction within the bearing area of the side blocks result in an outward thrust that must be resisted by the joint boundary conditions, if this test is to measure shear behavior (Fig. 14). In the standard double-block shear test, the outward thrust is countered by bearing friction (Fig. 14A). Removing the bearing friction by placing the test joint on roller supports in the confinement apparatus (Fig. 14B) caused a large drop in joint stiffness as well as strength. The application of lateral restraining pressure helped restore strength lost as a result of removal of the bearing friction but did not restore joint stiffness.

Standard tests conducted without the apparatus resulted in shear strengths comparable to those obtained using 20 lb/in$^2$ of confinement pressure, but initial stiffness was greater than that in any of the confined tests. Load at 0.015-in. displacement averaged 50 lb/plug greater for the joints tested without the apparatus. Loads for the 20-lb/in$^2$ and 40-lb/in$^2$ confinement pressures were not significantly different at this displacement. At 0.03-m displacement, loads for the 40-lb/in$^2$ lateral pressure group averaged 34 lb/plug greater than that for the 20-lb/in$^2$ lateral pressure group but were not significantly different than loads for joints tested without the apparatus.

The *K* values derived on the basis of confined joint test results (Table 9), as well as the f-test values for mean difference, showed that initial stiffness of the confined joints did not vary significantly with confinement pressure. The *K* values for the confined joints were roughly 50 percent of those for the joints tested without the confinement apparatus.

At a load of 4,000 lb and a coefficient of friction of 0.4, the lateral restraining force caused by friction is roughly 800 lb. At 40 lb/in$^2$, the confinement apparatus provides a restraining force (1,600 lb) that is roughly twice the friction force developed without the apparatus. The fact that joints tested under 40 lb/in$^2$ restraining pressure showed lower initial stiffness suggests that the confining platen may have been able to rotate slightly, thus allowing initial spreading of the joint side members.

Figure 15 shows the measured separation of the con&r-ing platens versus shear displacement for a joint tested in the apparatus under zero confinement pressure. The linearity well beyond maximum load on the joint suggests that the ratio of side member rotation to vertical displacement of the middle member remains constant, despite the inelastic shear displacement of the joint. A regression analysis of the platen separation versus shear displacement for the three levels of confinement (Fig. 16) showed that the slope of this line for joints tested with zero confinement pressure is roughly six times that found for the 40-lb/in$^2$ confinement. The 20-lb/in$^2$ confinement tests had an average platen separation/shear displacement ratio only 1.6 times that of the in$^2$ confinement tests. These findings support the premise that lack of proper confinement leads to side member rotation, plug withdrawal, and lower shear load capacity.

## Phase III

The effects of test variables on joint stiffness and strength varied with species. Between-board variability

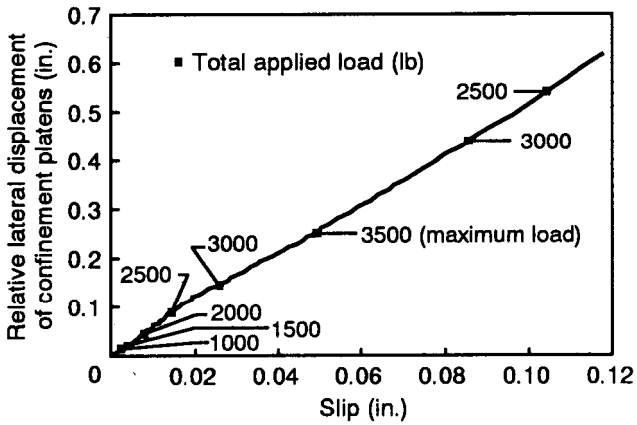


*Figure 15—Separation of confining platens measured parallel to direction of confining force compared to joint shear deformation measured parallel to joint loading force for joint tested with no confinement pressure. Note linearity well beyond maximum load*

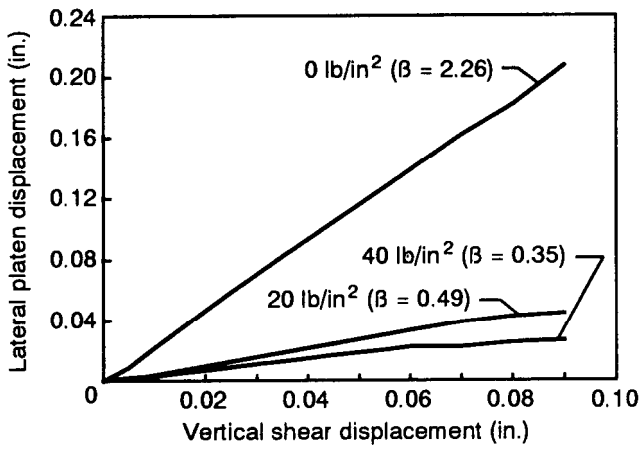


*Figure 16—Lateral displacement of confining platens for three levels of confinement pressure.*

had a significant effect on Douglas Fir joint strength and initial stiffness but did not affect Spruce-Pine-Fir or Southern Pine joints. Load orientation with respect to the wood grain had a significant effect on the initial stiffness for all test joints, on slip at maximum load for all but Southern Pine, and on maximum load for Douglas Fir only. Plate type had a significant effect on joint stiffness for all species, but significant effects on strength were shown only for Southern Pine and Spruce-Pine-Fir.

A possible explanation for the interaction between Douglas Fir boards and joint strength is the quality of the material. The Douglas Fir was purchased at a relatively high moisture content and had to be conditioned to 12 percent moisture content prior to joint fabrication. During conditioning, several boards cupped slightly.

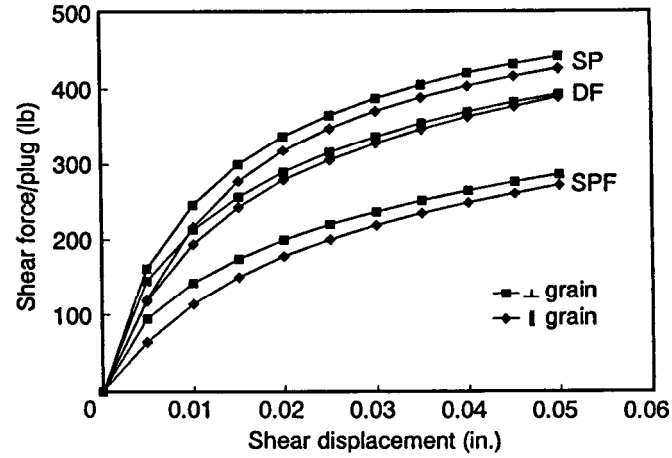


*Figure 17—Load-slip curves for loads applied parallel and perpendicular to grain for three species.*

When joints were fabricated, pressing may have caused slight tension perpendicular-to-grain fractures in flattening the cup or the plates may not have been uniformly pressed.

The effect of shear load orientation with respect to wood grain direction varied with displacement level, species, and plate type. Figure 17 shows the force-per-plug as opposed to shear displacement for loads applied parallel and perpendicular to the grain. In the range of 0 to 0.05 in. of slip, the mean perpendicular-to-grain load was greater than the mean parallel-to-grain load for all species. Initial joint stiffness, represented by the *K* parameter in Equation (1) and listed in Table Al of Appendix A averaged 39 percent greater for load applied perpendicular to the grain. The ANOVA showed that the effect of load orientation was significant at the 0.05-percent level for load at intermediate displacements when stainless steel plates were used in Southern Pine and Spruce-Pine-Fir and for maximum load when either plate type was used in Douglas Fir. In the latter case, parallel-to-grain loading showed a 10 to 20 percent advantage.

Plate type had a significant effect (0.05-percent level of confidence) on joint strength and stiffness when evaluated for the entire sample. However, the effect of plate type varied when evaluated by species and load orientation. For the Spruce-Pine-Fir samples, galvanized plate joints were stiffer and stronger (380 lb/plug compared to 340 lb/plug) than stainless steel joints when load was applied parallel to the grain, but the difference was not significant when load was applied perpendicular to the grain (average 360 lb/plug). Southern Pine joint tests also showed that the galvanized plate joints were stiffer. However, the stainless steel plates had significantly higher slip at maximum load and a significantly higher maximum load. The average maximum load for stainless

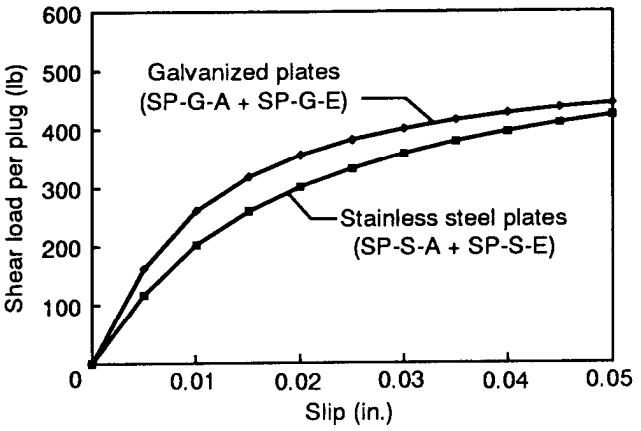


***Figure 18—Effect of plate type on characteristic shear load-slip behavior of STP connections. Curves represent combined average for parallel- and perpendicular-to-grain loading for each plate type.***

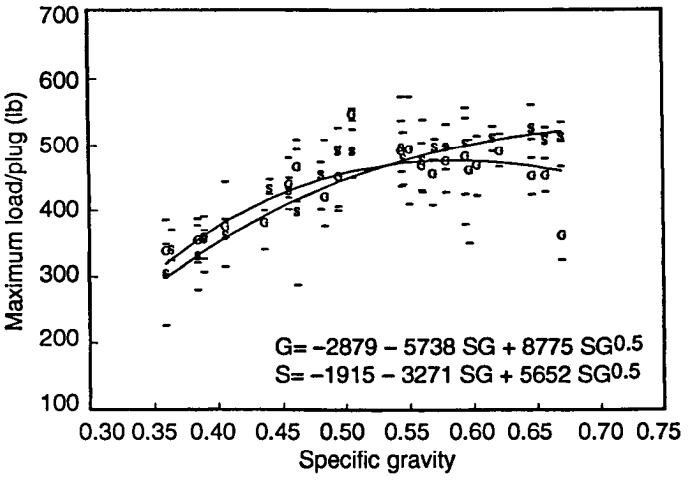


***Figure 19—Nonlinear curve fit to mean maximum load compared to SG. Values derived for galvanized (G) and stainless steel (S) plate connections tested in phase III. Letters designate mean and bars designate 95 percent confidence interval.***

steel and galvanized plates was 487 and 472 lb/plug, respectively, for parallel-to-grain loads, and 511 and 470 lb/plug, respectively, for perpendicular-to-grain loads. For Douglas Fir, the galvanized plate joints were stiffer than the stainless steel plate joints but there was no significant difference in joint strength: both plate types averaged 500 lb/plug for loads applied parallel to the grain and 450 lb/plug for perpendicular to the grain.

Figure 18 compares the performance of Southern Pine stainless steel and galvanized plates. These plots represent the combined sample of parallel- and perpendicular-to-grain loading.

As was expected, joint strength varied with species. While this variation is attributed primarily to differences in SG, the variability in SG alone explains less than 60 percent of the variability in joint strength. The repression of maximum load on SG and the square root of SG give Equations (2) and (3). These equations are plotted in Figure 19 along with the mean and 95-percent confidence intervals for galvanized and stainless steel joints tested in phase III. These relations explain 62 percent of the variability in joint strength with the galvanized plates ($f_g$) and 74 percent of the variability in joint strength with the stainless steel plates ($f_s$).

$$f_g = (-2{,}879 - 5{,}738SG + 8{,}775\sqrt{SG}) \qquad (2)$$

$$f_s = (-1{,}915 - 3{,}271SG + 5{,}652\sqrt{SG}) \qquad (3)$$

In this study, SG values ranged from 0.35 to 0.70. When these values are substituted into Equations (2) and (3), the resultant mean strength estimates range from 284 to 524 lb/plug. Dividing by 3 results in design values ranging from 95 to 175 lb/ plug. Values of average load at 0.03-in. slip ranged from 183 to 408 lb/plug. Both these derivations assume boundary conditions comparable to that of the double-block shear test and a 4x5 plate on 2 by 6 lumber. Figure 20 shows the relative performance of the three species over the 0.005- to 0.05-in. range in slip. The Southern Pine joints were the stiffest and strongest. Using Southern Pine values as the basis, values were ordered on a scale of 0 to 1. Relative average performance of joints in Douglas Fir and Spruce-Pine-Fir joints was roughly equal to their relative average SG (0.93 for Douglas Fir and 0.69 for Spruce-Pine-Fir).

Maximum load appeared to be more sensitive to increases in SG at the low end of the scale of SG values measured in this study than at the high end. This suggests a possible threshold brought about by a change in failure mode. Bearing deformation of the wood may play a greater role in defining maximum load for the lower SG species. As SG and bearing resistance increase, the plug teeth bend to a greater extent. This conclusion is only partially supported by our test results. The stiffer stainless steel had no significant effect on the lower SG Spruce-Pine-Fir joints loaded perpendicular to the grain: galvanized joints averaged 358 lb/plug and stainless steel joints 360 lb/plug. At the high end of the SG range, the Southern Pine joints with stainless steel plates (511 lb/plug) were 8 percent stronger than those with galvanized plates (470 lb/plug). For the Douglas Fir joints, however, plate type did not have a significant effect: maximum load for the stainless steel plates averaged 452 lb compared to 447 lb for the galvanized plates.

To account for the effect of SG on joint stiffness and strength, we modified the three-parameter model

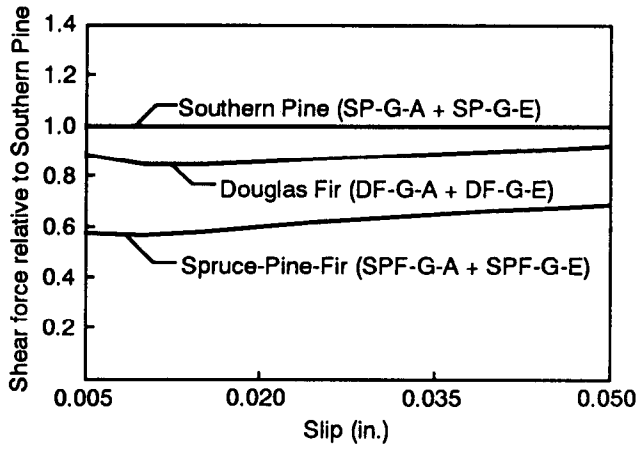


***Figure 20—Species effects shown as average relative strength of Douglas Fir (DF) and Spruce-Pine-Fir (SPF) joints compared to Southern Pine (SP) joints. Note that these relative ratios are close to those determined fir specific gravity (0.93 for DF and 0.69 for SPF). At the W-percent confidence level, the difference between DF and SP is not significant.***

(EQ. (1)) to include SG. The best of these modifications, in terms of tit and ease of applying, was obtained by multiplying each model parameter ($P_0$, $P_1$, and $K$) by SG. Setting the original parameters equal to $SG^{\star}P_0'$ , $SG^{\star}P_1'$, and $SG^{\star}K'$ gives the expression

$$f = (SG^{*} P_0' + SG^{*} P_1'\delta \left(1 - \exp\left(\frac{-K' * SG|\delta|}{SG^{*} P_0'}\right)\right) \quad (4)$$

or

$$f = SG^{*}(P_0' + P_1'\delta)\left(1 - \exp\left(\frac{-K|\delta|}{P_0'}\right)\right) \quad (5)$$

This form of the equation is intended to account for differences across species. Parameters derived for the four combinations of plate type and load grain orientation are given in Table 10.

## Summary of Joint Strength Results

Design values for plated connections are normally derived as one-third of the average failure load or load at 0.03-in. displacement, whichever is less. The control joints in this study had an average maximum load capacity of 455 lb/plug with a COV of only 8 percent. This would translate to a design basis of 150 lb. The average load at 0.030-in. slip was 390 lb/plug with a COV of 9 percent.

**Table 10—Foschi parameters for joints in phase II[a]**

| Joint | $P_0$ | $P_1$ | $K$ |
|---|---|---|---|
| No SG in equation | | | |
| SA | 342 | 851 | 20,780 |
| SE | 335 | 929 | 24,569 |
| GE | 382 | 27 | 26,613 |
| GA | 405 | -86 | 20,925 |
| SG in equation | | | |
| SA | 674 | 1,446 | 39,579 |
| SE | 632 | 1,946 | 48,113 |
| GE | 624 | 1,911 | 60,253 |
| GA | 655 | 1,497 | 47,052 |

[a]Parameters derived for each joint type with and without consideration of specific gravity (SG).

The joint confinement tests conducted in phase II indicate the need for better characterization of joint boundary conditions. The strength of joints tested with no confinement averaged 60 percent of the strength of joints tested using either direct pressure or bearing surface friction restraint. The results suggest that the double-block shear values may be unconservative unless some form of joint confinement is used.

Fabrication of joints by the one-stage pressing method required more energy and resulted in lower stiffness and strength values than fabrication by the two-stage process. Fabrication pressure requirements were on the order of 25 percent greater for one-stage pressing to obtain joints comparable in appearance to those fabricated by two-stage pressing. For 4x5 plates, one-stage joints were only 75 percent as stiff and 85 percent as strong as two-stage joints. For 2x5 plates, the pressing method had a slight effect on joint stiffness (one-stage joints were 89 percent as stiff as two-stage joints); the effect on strength was the same for both one-stage and two-stage joints.

The results of tests on the effect of plate size are inconclusive. The 2x5 plates appeared to increase the load per plug capacity by 25 percent compared to the 4x5 plates. This difference was significant at the 0.05-percent level of confidence. Differing modes of failure, however, suggest that this difference in strength may have been partially influenced by the size of the joint wood members relative to the size of the STPs. For joints with 4x5 plates, strength was influenced by the wood deformation caused by bearing stresses.

Joint strength and stiffness were directly related to SG. Relative values of average joint load capacity measured at incremental slips were fairly constant over the range of 0.005 to 0.05 in. of slip and roughly equal to average relative SG values. Differences between the Southern Pine and Douglas Fir joint strength values were significant at the 0.05-percent level of confidence.

Test boundary conditions had a major effect on failure mode and joint strength. Joints tested with no lateral restraint failed at less than 60 percent of those tested with some form of restraint. Although the amount of lateral pressure did have a significant effect on joint strength, it did not significantly affect stiffness. When compared to joints tested outside the confinemement apparatus, the confined joints actually displayed lower stiffness.

### Summary of Joint Stiffness Results

Species or SG appeared to have the greatest effect on joint stiffness. The average stiffness of Douglas Fir joints tested in phase III was 85 percent that of the Southern Pine controls. The average stiffness of Spruce-Pine-Fir joints was only 59 percent of the control. Relative SG values for these two species, compared to that of Southem Pine, were 93 percent and 69 percent, respectively.

## Conclusions

- The two-stage method of joint fabrication is preferable to the one-stage pressing process.

- Further study is needed to verify or quantify the effect of plate sire. Additional studies should consider the size of wood members relative to that of the shear transfer plates (STPs).

- Joint strength appears to be directly related to member specific gravity. Further study should be conducted to evaluate specific gravity as a predictor of load capacity of STP joints.

- For basic research on the effects of fabrication methods or material mechanical properties, surface flatness and ring orientation should be controlled to reduce unnecessary variation.

- The effect of load orientation with respect to wood grain appears to be species-dependent. In most cases, the difference between perpendicular- and parallel-to-grain loading was not significant, but it was significant for the Southern Pine and Spruce-Pine-Fir joints fabricated using galvanized plates.

- Test sample boundary conditions should be carefully controlled to reflect in-use conditions or varied to determine the effects of different failure modes.

### References

**American Society for Testing and Materials.** 1984. Annual Book of ASTM Standards. Section 4 (Construction) Volume 04.09 (Wood). ASTM, Philadelphia, PA.

**Bohnhoff, D.R.** 1987. Theoretical and users manual for FEAST: Finite Element Analysis of Spliced Timber. Available from David Bohnhoff, Agriculture Engineering Department, University of Wisconsin-Madison, (608) 262-9546.

**Bohnhoff, D.R.; Cramer, S.M.; Moody, RC.; Cramer, C.O.** 1989. Modeling vertically mechanically laminated lumber. Journal of Structural Engineering. 115(10): 2661-2679.

**DILHR** 1988. Wisconsin Building Material Approval No. 880019-W. Wisconsin Department of Industry, Labor, and Human Relations, Madison, WI.

**Foschi, R.O.** 1977. Analysis of wood diaphragms and trusses. Part II. Truss plate connections. Canadian Journal of Civil Engineering. 4: 353-362.

# Appendix A-Confinement Apparatus

A side view of the confinement apparatus without displacement transducers and several bearings is shown in Figure Al. A top view showing the location of the displacement transducers (but neither bearings nor the base plate) is shown in Figure A2. Figure A3 is a schematic of the complete hydraulic system.

The confinement apparatus was designed to provide varying levels of lateral confinement during fastener shear tests. Lateral pressure is applied to the specimen when the hydraulic cylinder pushes the inside platen toward the outside platen. The outside platen and the support for the cylinder are connected by tension bars. Slots in the tension bars allow the inside platen to move independently of the bars. Both platens and the cylinder support are bolted to bearing plates that ride on steel rollers. Hold-down roller bearings ensure that the bearing plates do not lift off the steel rollers when a vertical load is applied to the specimen. The platens can easily be rolled back and forth on the steel rollers even when they themselves are applying lateral load to the specimen. This capability to float in either direction ensures that equal but opposing lateral forces are being applied by the platens as vertical loads are being applied to the specimen.

The amount of lateral force applied by the platens is directly related to the oil pressure in the hydraulic cylinder and is continually monitored with the pressure transducer (Fig. A3). Hydraulic oil is pressurized by nitrogen gas via a piston accumulator. Total pressure in the system is changed by adjusting the pressure regulator on the nitrogen gas tank.

The confinement apparatus was designed to provide three levels of confinement: (1) no lateral restraint, (2) a fixed lateral force, and (3) complete lateral restraint.

1. No, or more correctly, negligible lateral restraint is obtained by leaving the three-position valve on the backside (i.e, gas side) of the accumulator in the "vent" position and the on-off valve in the "on" position. Since each outside wood member rests on a bearing plate that rides on steel rollers, there is very little resistance to lateral movement. Even though lateral pressure is not being applied by the platens, total lateral displacement of the platens can still be monitored.

2. A fixed lateral force, one that does not change as the vertical load increases, is obtained by leaving the three-position valve in the "charge" position and the on-off valve in the "on" position. The exact level of the fixed force can be changed by adjusting the pressure regulator. The ability to maintain a fixed lateral force is due to the compressibility of the gas and is dependent on the amount of gas in the system (the higher the volume, the better) and on the magnitude of the lateral displacements. During the STP experiments, there was no measurable change in the selected lateral force. This can be attributed to the relatively small lateral displacements (which displaced small quantities of oil) and the relatively high ratio of gas to oil (by volume) in the accumulator.

3. Complete lateral restraint is achieved by not allowing the outside wood members to move laterally when a vertical load is applied to the middle member. This is accomplished by (a) pressurizing the system (as described in the preceding paragraph) to bring the platens in contact with the specimen, and then (b) locking the oil in place by turning the on-off valve to the "off" position. The constantly increasing force required to keep the outside members in place as the vertical load increases is monitored by the pressure transducer. The initial lateral force depends on the pressure selected during system pressurization.

When the on-off valve is in the "off" position and vertical loads are applied to the specimen, it is possible to get oil pressures that exceed the maximum nitrogen gas charging pressure (i.e., the nitrogen gas tank pressure). To protect the pressure transducer, hydraulic cylinder, and hydraulic oil plumbing from abnormally high pressures, a pressure relief value was installed in parallel to the on-off valve. Once the crack pressure for the relief valve is exceeded, the system operates in the fixed lateral force mode.

Generally, to remove a specimen after a test, the three-position valve must be turned to the "vent" position. This action releases all nitrogen gas in the accumulator into the atmosphere. Continual venting of gas ultimately requires that the gas tank be refilled. It should be noted that only a fraction of one tank was used in the STP study because of the high initial tank pressure (6,000 lb/in$^2$), the tank volume (1.5 ft$^3$), and the low volume of gas used during the experiments.

Prior to using the test apparatus, the system was calibrated to determine the relationship between the oil pressure in the system and the lateral force on the test specimen. This was accomplished by placing a load cell and hydraulic jack in series between the platens. With the on-off valve in the "off" position, the load cell was "jacked" against the platens, and electrical output from the load cell and pressure transducer was recorded using an X-Y recorder.

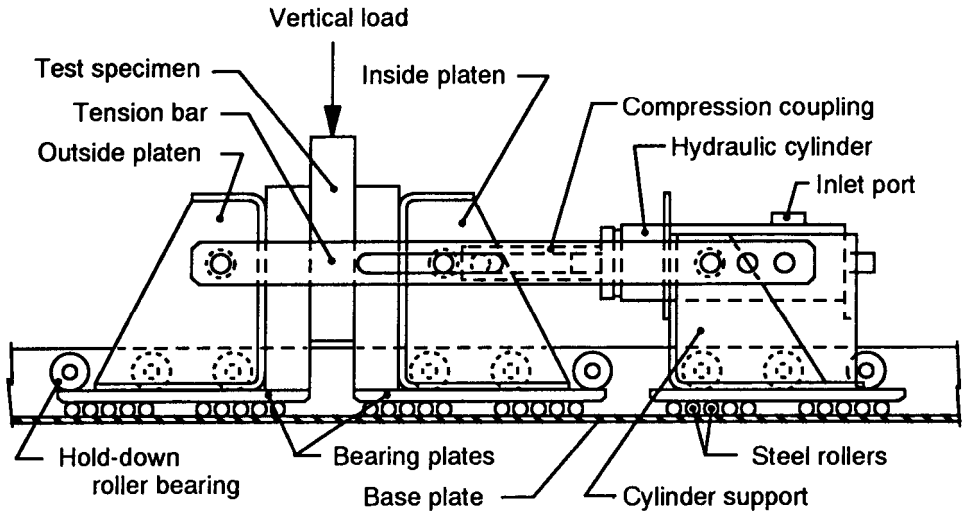


*Figure A1—Side view of confinement apparatus without displacement transducers and several bearings.*

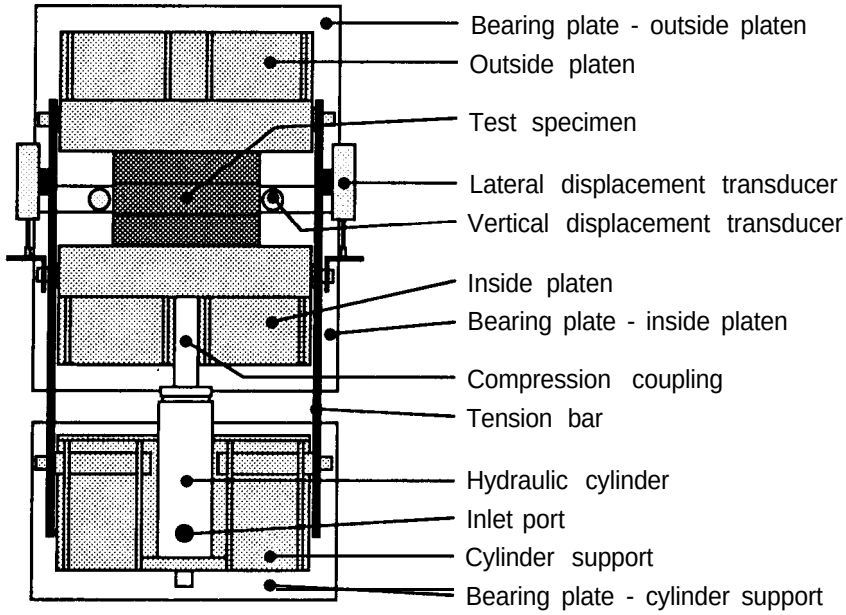


*Figure A2—Top view of confinement apparatus showing location of displacement transducers.*

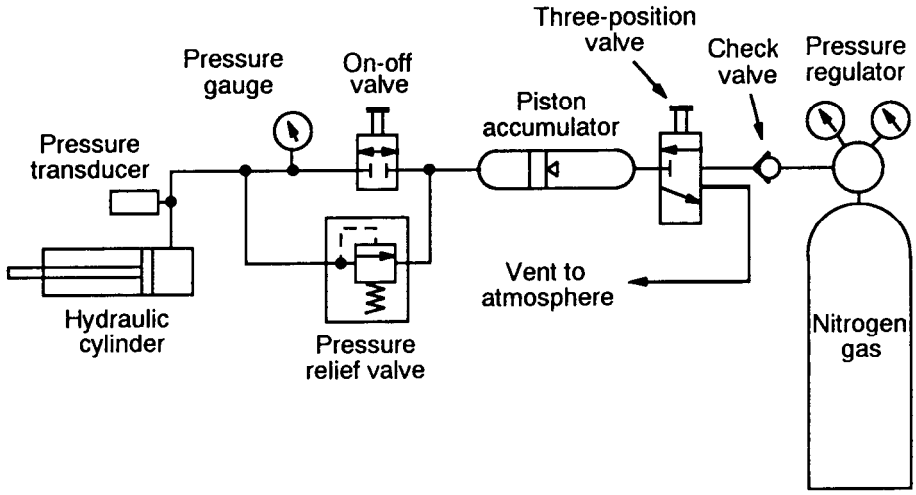


*Figure A3—Schematic of complete hydraulic system.*

# Appendix B-Derivation of Foschi Parameters for Load-Slip Curves

Teats of shear transfer plates were conducted to characterize their performance as a means of transferring interlaminar shear. This appendix presents a summary of the test data as well as a closed form function to predict average performance of STP joints. Table B1 shows the parameters derived to give a best fit of the three-parameter model proposed by Foschi (1977) for gusset-type metal plate connectors. Three parameters are given for each of the 20 test configurations studied One configuration, designated as the control, was the same for each phase of the study. The row labeled CONTROL lists the Foschi parameters that gave the beat fit to the average curve for all control tests.

The parameters in Table B1 are based on loads at 10 incremental deformations beginning at the zero-displacement zero-load coordinate and ending at 0.05 in. displacement. These values are listed in Tables B2 to B6, which summarize the results of 22 tests of each joint configuration in phases I to III. At each of 10 displacements, ranging from 0.005 to 0.05 in., these tables list the number of joint teats that reached the corresponding displacement; the average, maximum, and minimum loads; and the coefficient of variation. A Student's *t*-test distribution was assumed to derive the 90-percent confidence interval on the mean, which was calculated as $\overline{X}(1 \pm g\ \mathrm{COV})$. In this case, $\gamma$ is the number of standard deviates from the mean to the 5th and 95th percentile points of the Student's t-teat distribution, given the number of observations listed in the Count column.

**Table B1—Parameters derived to fit average load-displacement curve for each joint configuration[a]**

| Phase | Joint | $P_0$ | $P_1$ | $K$ |
|---|---|---|---|---|
| I | 25-1 | 299.9 | 2,772 | 26,682 |
| | 45-1 | 241.2 | 2,283 | 35,975 |
| | 25-2 | 408.5 | 2,012 | 29,776 |
| | 45-2[b] | 330.6 | 1,915 | 43,538 |
| II | WOA[b] | 332.6 | 1,963 | 50,790 |
| | ANO | 151.4 | 2,038 | 25,122 |
| | ALO | 479.5 | -727 | 25,364 |
| | AHI | 750.0 | -3,812 | 24,601 |
| III | SP-S-E | 295.2 | 2,891 | 31,449 |
| | SP-G-E[b] | 347.2 | 2,120 | 50,641 |
| | SP-S-A | 338.4 | 1,667 | 25,968 |
| | SP-G-A | 400.0 | 890 | 34,708 |
| | SPF-S-E | 150.6 | 2,452 | 18,536 |
| | SPF-G-E | 176.5 | 2,591 | 28,582 |
| | SPF-S-A | 142.4 | 1,944 | 11,457 |
| | SPF-G-A | 230.4 | 1,703 | 18,352 |
| | DF-S-E | 228.4 | 3,107 | 32,667 |
| | DF-G-E | 271.7 | 2,804 | 41,022 |
| | DF-S-A | 243.0 | 2,548 | 25,537 |
| | DF-G-A | 286.2 | 545 | 32,441 |
| | CONTROL[b] | 336.0 | 2,008 | 48,241 |

[a]Parameters were derived using the function $f = (P_0 + P_1 d)(1 - \exp(-K|d|/P_0))$.

[b]Control samples tested in each phase were combined to give the final control curve.

**Table B2—Load-slip data for phase I tests**

| Slip (in.) | Count[a] | Load (lb) Avg | Max | Min | COV (%) | 90% confidence on mean |
|---|---|---|---|---|---|---|
| | | **Joint 25-1** | | | | |
| 0.005 | 22 | 114 | 165 | 54 | 23 | 105 - 124 |
| 0.01 | 22 | 195 | 268 | 101 | 19 | 182 - 209 |
| 0.015 | 22 | 249 | 326 | 143 | 17 | 234 - 265 |
| 0.02 | 22 | 293 | 37 | 179 | 15 | 272 - 309 |
| 0.025 | 22 | 328 | 401 | 206 | 14 | 311 - 345 |
| 0.03 | 22 | 357 | 42 | 231 | 13 | 339 - 375 |
| 0.035 | 22 | 381 | 446 | 255 | 13 | 364 - 399 |
| 0.04 | | 401 | 462 | 276 | 12 | 383 - 419 |
| 0.045 | 22 | 417 | 479 | 292 | 12 | 400 - 435 |
| 0.05 | 22 | 431 | 495 | 305 | 11 | 413 - 449 |
| | | **Joint AB 25-2** | | | | |
| 0.005 | 22 | 124 | 172 | 87 | 19 | 116 - 133 |
| 0.01 | 22 | 223 | 289 | 158 | 15 | 211 - 236 |
| 0.015 | 22 | 294 | 365 | 214 | 13 | 280 - 308 |
| 0.02 | 22 | 345 | 422 | 262 | 11 | 330 - 359 |
| 0.025 | 22 | 384 | 466 | 305 | 10 | 369 - 398 |
| 0.03 | 22 | 415 | 499 | 340 | 10 | 400 - 430 |
| 0.035 | 22 | 44 | 525 | 367 | 9 | 426 - 457 |
| 0.04 | 22 | 463 | 548 | 387 | 9 | 447 - 479 |
| 0.045 | 22 | 481 | 566 | 401 | 9 | 465 - 497 |
| 0.05 | 22 | 496 | 581 | 411 | 9 | 479 - 512 |
| | | **Joint 45- 1** | | | | |
| 0.005 | 21 | 136 | 175 | 75 | 20 | 126 - 147 |
| 0.01 | 21 | 206 | 257 | 141 | 16 | 193 - 218 |
| 0.015 | 21 | 240 | 291 | 176 | 13 | 229 - 251 |
| 0.02 | 21 | 270 | 320 | 205 | 11 | 259 - 281 |
| 0.025 | 21 | 292 | 343 | 230 | 10 | 281 - 303 |
| 0.03 | 21 | 308 | 361 | 250 | 10 | 297 - 320 |
| 0.035 | 21 | 323 | 375 | 265 | 9 | 312 - 334 |
| 0.04 | 21 | 334 | 386 | 274 | 9 | 323 - 346 |
| 0.045 | 21 | 344 | 396 | 282 | 9 | 333 - 355 |
| 0.05 | 21 | 351 | 404 | 286 | 9 | 340 - 362 |
| | | **Joint 45-2** | | | | |
| 0.005 | 22 | 165 | 228 | 117 | 21 | 152 - 178 |
| 0.01 | 22 | 260 | 333 | 201 | 15 | 245 - 274 |
| 0.015 | 22 | 305 | 369 | 252 | 11 | 293 - 317 |
| 0.02 | 22 | 339 | 402 | 288 | 9 | 327 - 350 |
| 0.025 | 22 | 363 | 427 | 315 | 8 | 353 - 374 |
| 0.03 | 22 | 382 | 446 | 338 | 7 | 372 - 393 |
| 0.035 | 22 | 397 | 461 | 354 | 7 | 387 - 407 |
| 0.04 | 22 | 408 | 473 | 361 | 7 | 398 - 419 |
| 0.045 | 22 | 417 | 483 | 362 | 7 | 407 - 428 |
| 0.05 | 21 | 421 | 458 | 361 | 6 | 411 - 431 |

[a]Number of tests that reached the corresponding displacement.

Table B3—Load-slip data for phase II tests

| Slip (in.) | Count[a] | Load (lb) Avg | Max | Min | COV (%) | 90% confidence on mean |
|---|---|---|---|---|---|---|
| | | Condition AHI | | | | |
| 0.005 | 22 | 99.9 | 156.9 | 56.6 | 34 | 41 - 158 |
| 0.01 | 22 | 199.3 | 286.3 | 126.1 | 27 | 106 - 293 |
| 0.015 | 21 | 273.8 | 360.6 | 179.8 | 18 | 187 - 361 |
| 0.02 | 21 | 328.2 | 411.2 | 227.4 | 14 | 248 - 409 |
| 0.025 | 20 | 366.3 | 452.0 | 260.6 | 12 | 292 - 441 |
| 0.03 | 20 | 397.7 | 473.9 | 297.2 | 10 | 328 - 468 |
| 0.035 | 20 | 419.1 | 489.1 | 312.7 | 10 | 347 - 491 |
| 0.04 | 20 | 433.6 | 499.0 | 334.2 | 9 | 364 - 503 |
| 0.045 | 20 | 445.1 | 505.9 | 351.2 | 9 | 378 - 512 |
| 0.05 | 20 | 453.9 | 510.2 | 365.4 | 8 | 389 - 519 |
| | | Condition ALO | | | | |
| 0.005 | 22 | 103.1 | 158.0 | 65.7 | 27 | 55 - 151 |
| 0.01 | 22 | 194.8 | 276.6 | 135.7 | 21 | 125 - 265 |
| 0.015 | 22 | 260.7 | 349.3 | 184.5 | 19 | 177 - 345 |
| 0.02 | 22 | 305.6 | 383.9 | 225.6 | 16 | 222 - 390 |
| 0.025 | 22 | 338.6 | 405.7 | 257.1 | 14 | 257 - 420 |
| 0.03 | 22 | 362.7 | 424.0 | 282.4 | 12 | 285 - 441 |
| 0.035 | 22 | 380.8 | 438.4 | 300.9 | 11 | 307 - 455 |
| 0.04 | 21 | 395.0 | 450.6 | 319.4 | 11 | 322 - 468 |
| 0.045 | 21 | 404.9 | 459.1 | 333.4 | 10 | 334 - 476 |
| 0.05 | 21 | 413.6 | 466.5 | 345.5 | 10 | 345 - 482 |
| | | Condition ANO | | | | |
| 0.005 | 21 | 92.9 | 146.5 | 58.4 | 24 | 54 - 132 |
| 0.01 | 21 | 139.0 | 183.3 | 94.9 | 18 | 95 - 183 |
| 0.015 | 21 | 164.6 | 212.5 | 119.3 | 17 | 118 - 211 |
| 0.02 | 21 | 183.6 | 236.4 | 136.2 | 16 | 134 - 233 |
| 0.025 | 21 | 199.7 | 252.7 | 147.2 | 15 | 147 - 252 |
| 0.03 | 21 | 212.5 | 265.5 | 156.1 | 15 | 158 - 267 |
| 0.035 | 21 | 224.0 | 275.3 | 163.1 | 14 | 169 - 279 |
| 0.04 | 21 | 233.8 | 282.5 | 168.3 | 14 | 178 - 289 |
| 0.045 | 21 | 242.4 | 288.1 | 171.9 | 13 | 186 - 299 |
| 0.05 | 20 | 251.6 | 294.1 | 183.5 | 11 | 203 - 301 |
| | | Condition WOA | | | | |
| 0.005 | 22 | 189.6 | 274.8 | 115.0 | 21 | 121 - 258 |
| 0.01 | 22 | 271.4 | 356.3 | 189.6 | 16 | 198 - 345 |
| 0.015 | 22 | 320.8 | 395.9 | 241.9 | 13 | 246 - 395 |
| 0.02 | 22 | 353.5 | 422.2 | 277.4 | 12 | 278 - 429 |
| 0.025 | 21 | 374.1 | 445.1 | 303.7 | 12 | 299 - 449 |
| 0.03 | 21 | 390.2 | 461.6 | 319.1 | 11 | 316 - 465 |
| 0.035 | 21 | 402.5 | 474.0 | 328.3 | 11 | 329 - 476 |
| 0.04 | 21 | 412.1 | 482.8 | 334.8 | 10 | 338 - 486 |
| 0.045 | 20 | 420.5 | 490.8 | 341.4 | 10 | 345 - 496 |
| 0.05 | 20 | 426.6 | 498.2 | 346.8 | 10 | 351 - 502 |

[a]Number of tests that reached the corresponding displacement.

Table B4—Load-slip data for phase III Southern Pine tests

| Slip (in.) | Count[a] | Load (lb) Avg | Max | Min | COV (%) | 90% confidence on mean |
|---|---|---|---|---|---|---|
| | | Test configuration SE | | | | |
| 0.005 | 22 | 130 | 202 | 82 | 20 | 85 - 176 |
| 0.01 | 22 | 213 | 276 | 155 | 13 | 163 - 262 |
| 0.015 | 22 | 269 | 328 | 216 | 11 | 219 - 318 |
| 0.02 | 22 | 309 | 365 | 260 | 10 | 259 - 360 |
| 0.025 | 22 | 341 | 396 | 297 | 9 | 290 - 391 |
| 0.03 | 22 | 367 | 430 | 322 | 8 | 316 - 418 |
| 0.035 | 22 | 389 | 454 | 343 | 8 | 337 - 440 |
| 0.04 | 22 | 407 | 471 | 360 | 7 | 356 - 458 |
| 0.045 | 22 | 422 | 483 | 375 | 7 | 372 - 473 |
| 0.05 | 22 | 435 | 493 | 389 | 7 | 385 - 485 |
| | | Test configuration GE | | | | |
| 0.005 | 22 | 191 | 261 | 124 | 21 | 122 - 260 |
| 0.01 | 22 | 280 | 347 | 213 | 13 | 219 - 341 |
| 0.015 | 22 | 332 | 397 | 275 | 10 | 275 - 389 |
| 0.02 | 22 | 366 | 432 | 323 | 9 | 311 - 422 |
| 0.025 | 22 | 391 | 466 | 347 | 8 | 335 - 446 |
| 0.03 | 22 | 408 | 485 | 369 | 8 | 354 - 463 |
| 0.035 | 22 | 422 | 502 | 384 | 7 | 369 - 476 |
| 0.04 | 22 | 433 | 513 | 395 | 7 | 380 - 487 |
| 0.045 | 22 | 442 | 521 | 404 | 7 | 389 - 495 |
| 0.05 | 22 | 449 | 529 | 411 | 7 | 396 - 501 |
| | | Test configuration SA | | | | |
| 0.005 | 22 | 105 | 177 | 75 | 24 | 62 - 147 |
| 0.01 | 22 | 193 | 260 | 151 | 13 | 148 - 237 |
| 0.015 | 22 | 251 | 311 | 212 | 11 | 205 - 297 |
| 0.02 | 22 | 292 | 350 | 251 | 9 | 246 - 338 |
| 0.025 | 22 | 324 | 377 | 278 | 8 | 278 - 369 |
| 0.03 | 22 | 348 | 399 | 300 | 8 | 303 - 394 |
| 0.035 | 22 | 369 | 418 | 320 | 7 | 324 - 414 |
| 0.04 | 22 | 386 | 435 | 338 | 7 | 342 - 429 |
| 0.045 | 22 | 401 | 452 | 350 | 6 | 357 - 444 |
| 0.05 | 22 | 413 | 463 | 364 | 6 | 369 - 458 |
| | | Test configuration GA | | | | |
| 0.005 | 22 | 134 | 199 | 52 | 24 | 78 - 189 |
| 0.01 | 22 | 241 | 297 | 144 | 14 | 182 - 301 |
| 0.015 | 22 | 305 | 362 | 219 | 10 | 250 - 359 |
| 0.02 | 22 | 345 | 403 | 260 | 9 | 293 - 398 |
| 0.025 | 22 | 373 | 433 | 291 | 8 | 321 - 424 |
| 0.03 | 22 | 393 | 455 | 318 | 7 | 343 - 443 |
| 0.035 | 22 | 409 | 468 | 337 | 7 | 360 - 458 |
| 0.04 | 22 | 422 | 480 | 355 | 7 | 374 - 470 |
| 0.045 | 22 | 432 | 491 | 366 | 6 | 384 - 479 |
| 0.05 | 22 | 440 | 498 | 377 | 6 | 393 - 487 |

[a]Number of tests that reached the corresponding displacement.

**Table B5—Load-slip data for phase III Douglas Fir tests**

| Slip (in.) | Count[a] | Load (lb) Avg | Max | Min | COV (%) | 90% confidence on mean |
|---|---|---|---|---|---|---|
| | | Test configuration SE | | | | |
| 0.005 | 22 | 132 | 242 | 57 | 42 | 36 - 227 |
| 0.01 | 22 | 195 | 316 | 111 | 29 | 99 - 291 |
| 0.015 | 22 | 237 | 361 | 151 | 23 | 143 - 332 |
| 0.02 | 22 | 271 | 394 | 181 | 20 | 177 - 366 |
| 0.025 | 22 | 298 | 420 | 208 | 19 | 203 - 393 |
| 0.03 | 22 | 320 | 441 | 229 | 17 | 226 - 414 |
| 0.035 | 22 | 339 | 458 | 249 | 16 | 247 - 431 |
| 0.04 | 22 | 355 | 472 | 267 | 15 | 266 - 444 |
| 0.045 | 22 | 367 | 482 | 282 | 14 | 281 - 454 |
| 0.05 | 22 | 379 | 486 | 296 | 13 | 293 - 465 |
| | | Test configuration GE | | | | |
| 0.005 | 22 | 157 | 271 | 64 | 35 | 62 - 252 |
| 0.01 | 22 | 231 | 321 | 131 | 21 | 146 - 317 |
| 0.015 | 22 | 276 | 355 | 179 | 16 | 198 - 354 |
| 0.02 | 22 | 309 | 375 | 217 | 14 | 237 - 382 |
| 0.025 | 22 | 335 | 390 | 244 | 12 | 266 - 404 |
| 0.03 | 22 | 355 | 409 | 268 | 11 | 291 - 419 |
| 0.035 | 22 | 371 | 429 | 286 | 9 | 311 - 432 |
| 0.04 | 22 | 385 | 443 | 301 | 9 | 324 - 446 |
| 0.045 | 22 | 397 | 456 | 313 | 9 | 336 - 459 |
| 0.05 | 22 | 408 | 465 | 323 | 9 | 346 - 470 |
| | | Test configuration SA | | | | |
| 0.005 | 21 | 103 | 157 | 0 | 30 | 49 - 157 |
| 0.01 | 21 | 177 | 249 | 134 | 15 | 132 - 221 |
| 0.015 | 21 | 223 | 310 | 172 | 13 | 171 - 274 |
| 0.02 | 21 | 258 | 348 | 201 | 12 | 203 - 313 |
| 0.025 | 21 | 284 | 375 | 223 | 12 | 227 - 340 |
| 0.03 | 21 | 305 | 395 | 243 | 11 | 248 - 363 |
| 0.035 | 21 | 324 | 413 | 259 | 11 | 265 - 384 |
| 0.04 | 21 | 340 | 426 | 274 | 10 | 282 - 399 |
| 0.045 | 21 | 355 | 439 | 284 | 10 | 296 - 414 |
| 0.05 | 21 | 368 | 448 | 297 | 9 | 308 - 427 |
| | | Test configuration GA | | | | |
| 0.005 | 22 | 131 | 183 | 58 | 24 | 76 - 186 |
| 0.01 | 22 | 212 | 256 | 137 | 14 | 162 - 261 |
| 0.015 | 22 | 264 | 302 | 197 | 10 | 218 - 309 |
| 0.02 | 22 | 301 | 343 | 243 | 8 | 258 - 344 |
| 0.025 | 22 | 329 | 368 | 274 | 7 | 287 - 371 |
| 0.03 | 22 | 351 | 390 | 299 | 7 | 310 - 392 |
| 0.035 | 22 | 370 | 412 | 318 | 7 | 328 - 411 |
| 0.04 | 22 | 385 | 428 | 335 | 6 | 344 - 427 |
| 0.045 | 22 | 398 | 445 | 348 | 6 | 356 - 440 |
| 0.05 | 22 | 410 | 458 | 362 | 6 | 369 - 452 |

[a]Number of tests that reached the corresponding displacement.

**Table B6—Load-slip data for phase III Spruce-Pine-Fir**

| Slip (in.) | Count[a] | Load (lb) Avg | Max | Min | COV (%) | 90% confidence on mean |
|---|---|---|---|---|---|---|
| | | Test configuration SE | | | | |
| 0.005 | 22 | 78 | 173 | 35 | 40 | 24 - 133 |
| 0.01 | 22 | 123 | 223 | 60 | 32 | 54 - 191 |
| 0.015 | 22 | 156 | 261 | 82 | 29 | 79 - 233 |
| 0.02 | 22 | 181 | 291 | 100 | 26 | 100 - 262 |
| 0.025 | 22 | 202 | 311 | 116 | 24 | 120 - 285 |
| 0.03 | 22 | 220 | 330 | 131 | 22 | 136 - 304 |
| 0.035 | 22 | 235 | 344 | 144 | 21 | 151 - 319 |
| 0.04 | 22 | 248 | 355 | 159 | 20 | 165 - 331 |
| 0.045 | 22 | 260 | 365 | 172 | 19 | 177 - 343 |
| 0.05 | 22 | 271 | 373 | 183 | 18 | 188 - 354 |
| | | Test configuration GE | | | | |
| 0.005 | 22 | 111 | 168 | 57 | 29 | 55 - 66 |
| 0.01 | 22 | 159 | 216 | 97 | 20 | 104 - 215 |
| 0.015 | 22 | 192 | 245 | 130 | 17 | 137 - 246 |
| 0.02 | 22 | 218 | 268 | 152 | 14 | 164 - 272 |
| 0.025 | 22 | 238 | 291 | 172 | 13 | 184 - 292 |
| 0.03 | 22 | 255 | 306 | 190 | 12 | 201 - 309 |
| 0.035 | 22 | 269 | 319 | 204 | 12 | 215 - 323 |
| 0.04 | 22 | 282 | 329 | 217 | 11 | 229 - 336 |
| 0.045 | 22 | 293 | 341 | 229 | 11 | 240 - 346 |
| 0.05 | 22 | 302 | 350 | 240 | 10 | 249 - 355 |
| | | Test configuration SA | | | | |
| 0.005 | 22 | 51 | 89 | 29 | 27 | 27 - 74 |
| 0.01 | 22 | 90 | 147 | 51 | 22 | 55 - 125 |
| 0.015 | 22 | 120 | 187 | 67 | 21 | 77 - 163 |
| 0.02 | 22 | 144 | 218 | 80 | 20 | 94 - 195 |
| 0.025 | 22 | 165 | 244 | 94 | 20 | 108 - 223 |
| 0.03 | 22 | 183 | 265 | 106 | 19 | 122 - 244 |
| 0.035 | 22 | 198 | 283 | 118 | 19 | 134 - 262 |
| 0.04 | 22 | 212 | 298 | 130 | 18 | 145 - 279 |
| 0.045 | 22 | 224 | 312 | 141 | 18 | 155 - 293 |
| 0.05 | 22 | 235 | 323 | 152 | 17 | 165 - 305 |
| | | Test configuration GA | | | | |
| 0.005 | 22 | 77 | 127 | 31 | 30 | 37 - 117 |
| 0.01 | 22 | 137 | 195 | 67 | 22 | 85 - 189 |
| 0.015 | 22 | 179 | 242 | 115 | 18 | 125 - 233 |
| 0.02 | 22 | 210 | 279 | 148 | 15 | 155 - 266 |
| 0.025 | 22 | 236 | 303 | 167 | 14 | 180 - 291 |
| 0.03 | 22 | 255 | 324 | 182 | 13 | 199 - 311 |
| 0.035 | 22 | 272 | 341 | 196 | 12 | 216 - 328 |
| 0.04 | 22 | 287 | 356 | 210 | 11 | 231 - 342 |
| 0.045 | 22 | 299 | 367 | 222 | 11 | 243 - 354 |
| 0.05 | 22 | 310 | 380 | 232 | 10 | 254 - 365 |

[a]Number of tests that reached the corresponding displacement.