United States
Department of
Agriculture

Forest Service

**Forest
Products
Laboratory**

Research
Paper
FPL 386

January 1981

Reliability Analysis of Fire-Exposed Light-Frame Wood Floor Assemblies

Abstract

A reliability analysis using second-moment approximations is conducted on two types of fire-exposed, unprotected wood floors-conventional wood joist and floor-truss assemblies. A methodology is illustrated by which the probability of structural failure of a wood floor assembly can be evaluated. This probability, with the probabilities of failure of other system components, can be used in a systematic analysis that apparently is a viable approach to realistic analysis of building fire safety.

The use of reliability analysis to compare relative fire safety of different floor components is demonstrated. A procedure for introducing new components into the market, based on a concept of an equal safety index calculated for a component with a proven inservice record, is discussed.

United States
Department of
Agriculture

Forest Service

**Forest
Products
Laboratory**[1]

Research
Paper
FPL 386

Reliability Analysis of Fire-Exposed Light-Frame Wood Floor Assemblies

By
F. E. Woeste,[2] Assistant Professor
and
E. L. Schaffer, Engineer

Introduction

The effectiveness of structural assemblies-walls, floors, ceiling roofs- to act as barriers to fire growth is measured by using the American Society for Testing and Materials (ASTM) E-119 *(3)*[3] fire endurance test. This method requires a typical loaded assembly be exposed to fire and the time-to-failure recorded. This time is then employed to rate the assembly. An assembly that maintains its integrity for 30 minutes, or more, is said to have a 30-minute fire-endurance rating. The rating procedure is then used by codes to regulate the assembly designs satisfactory for buildings of various occupancies. The Department of Housing and Urban Development (HUD), for example, specifies exterior walls shall have a 20-minute endurance rating and floors a 10-minute rating in one- and two-family residences *(41).* This is believed to protect occupants and enable firefighters to safely combat dwelling fires.

One of several shortcomings of the present fire-endurance evaluation and rating system is that it does not realistically measure the fire safety afforded by assemblies. It simply compares the fire performance of one assembly with that of another by using a single-performance measure-a single test of each assembly to measure its fire endurance under a standard fire condition. If safety is discussed, soon the realization is of a need for a measure of the risk associated with an event occurring. Hence, the present fire-endurance rating system provides little information on the safety provided by structural assemblies. This lack is somewhat unfortunate because of the potential benefits to resident owners, developers of new assemblies, and the firefighting and code enforcement community that could be realized by having this information.

Approach

In this paper a risk-based methodology is presented as well as its application for assessing the fire-endurance safety of two unprotected light-frame assemblies-the conventional joist assembly and a floor-truss assembly.

In a floor, there are three primary modes of failure: Structural collapse, flame penetration, and excessive temperature rise on the unexposed surface (3). In a system analysis the probability of occurrence of each of these events would be required. In one- and two-family dwellings, only criteria of structural assembly failure are evaluated *(41).*

One objective of this research was to propose and illustrate a methodology by which the probability of structural failure of wood floor assemblies could be evaluated.

Another objective, perhaps more important for the immediate future, was a method by which new components could be introduced into the market. The underlying premise is that a new component can be substituted for a conventional and code-acceptable component if it provides the same “degree of safety” if exposed to the natural elements such as live and dead load, loads due to earthquakes, fire, and so on. The investigations reported here address the fire-performance aspects of floor assemblies.

---

[1] Maintained at Madison, Wis. 53705, in cooperation with the University of Wisconsin.

[2] Agricultural Engineering Department, Virginia Tech., Blacksburg, Va. 24061.

[3] Italicized numbers in parentheses refer to literature cited at end of report.

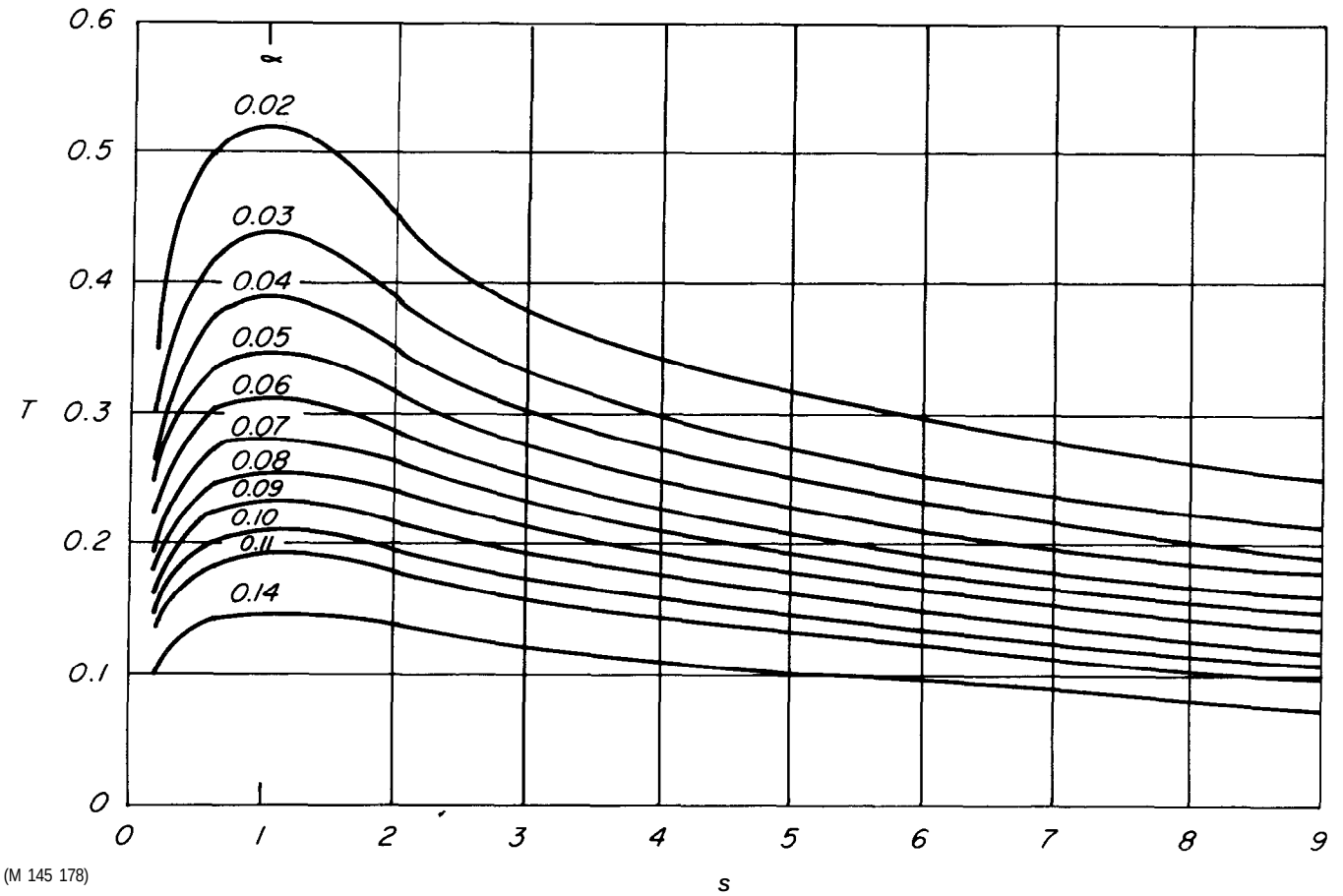

Figure 1.–Family of curves for fire endurance of wood floors (20)

$a^{1/2} = 1/2(1 - T\ddot{O}^{-}\dot{s})[1 - (T/2\ddot{O}^{-}\dot{s})1^{2}$ where

$$a = \frac{\text{applied load}}{\text{breaking load (extreme fiber stress of 11,000 pounds per square inch at maximum load.)}}$$

$$= \frac{\text{design allowable stress}}{\text{ultimate stress}}$$

s = D/B (depth/breadth),

T = $t/20\ddot{O}^{-}\dot{A}$,

t = fire endurance (min), and

A = cross-section area (in.^{2}).

Background

One rational approach to accomplishing both objectives is an analysis using probabilistic engineering methods. Probabilistic engineering is by no means a new discipline. Ang and others, as of 1972 in a review of literature, reported on some 355 research papers on structural reliability *(4).* Textbooks have been published on the subject, but research publications with application to steel, concrete, and wood engineering number only about 20. The use of this same theory in fire situations has been suggested and illustrated by researchers *(5,9,18,22).*

Fire Endurance of Floor Assemblies—Deterministic

In reinforced concrete and steel design areas, the concept of fire design engineering as opposed to strictly fire tests is gaining acceptance *(1,2,12,34,40).* Wood floor assemblies are qualified or fire rated based on test only, and these data have been published for assemblies with at least a 1-hour fire rating *(13).* Various researchers have been promoting a combination of design and testing resembling the manner in which the field of structural engineering emerged.

Sunley *(38)* reports the variability of strength of timber assemblies, when

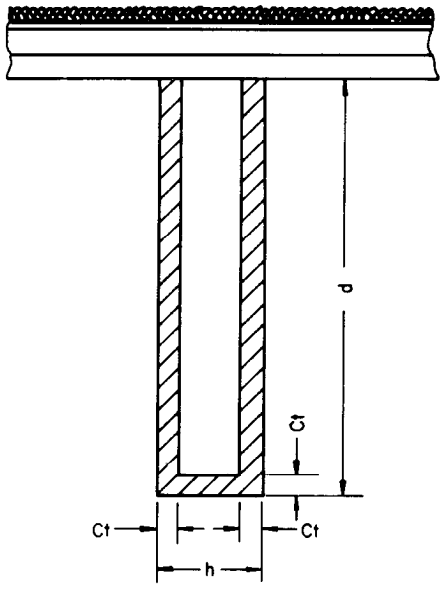

Figure 2.–An idealized exposed floor joist subjected to fire on three sides. Subfloor protects top side of joist. Although it is known bottom corners round, straight boundaries are used as an approximation. After time, t, and char rate, C, depth of char equals C • t on a joist of height, d, and thickness, h.

(M 148 531)

exposed to ASTM E-119 conditions, is less than the variability of assembly strength at normal temperature. Additional support for this is evident in the findings of Schaffer *(33)* and Knudsen and Schniewind *(19)* on the strength of small, clear specimens of wood at elevated temperature. Sunley argues further that fire design engineering should be no more difficult than designing for other load types.

Equations have been developed to predict the fire endurance of fire-exposed joist floor *(20,21).* The method of analysis was empirical, having as a starting point the flexure formula for pure bending. In each case, the solutions to these equations are obtained by graphical methods (fig. 1). These equations cannot be used conveniently in a probabilistic analysis; thus, additional modeling is needed. A purely analytical approach to predicting strength at elevated temperatures would be most desirable, and a considerable amount of basic input data exists (34). However, this type of modeling has not been accomplished; thus, simplified strength models will be used in the analysis that follows.

Analysis of Time-to-Failure

The first step of a probabilistic solution to an engineering problem is to identify two (preferably independent) random variables, one of which represents a load effect and the other a resistance effect. These variables are normally denoted by load S and resistance R. When R and S have the same units and the probability of R being less than S can be interpreted physically as failure, the stage is set for a meaningful solution. In a fire situation, if fire endurance is associated with load S and time-to-failure of the component is associated with resistance R, the stated requirements are met. Modeling the time-to-failure of various floor assemblies and the fire severity to which they may be exposed is the first required step to further estimate safety of assemblies.

Fire Duration

The prediction of fire duration, and more generally fire severity, is itself a research topic *(6,11,23,29,30,39).* For this analysis, it will suffice to use the approach reviewed by Lie (21). For ventilation-controlled fires, in which the duration would be the longest, the equation that relates fire duration to available ventilation (e.g., window area and window height) is given by

$$t_d = \frac{W A_F}{5.5\ A_W H^{1/2}} \text{ (min)} \qquad (1)$$

where W, A_F, A_W, and H will be treated as random and defined as

W = fuel load density (kg/m^2)

A_F = floor area (m^2)

A_W = window area (m^2)

H = window height (m)

The constant 5.5 has units kg min^{-1} m$^{-5/2}$

Model Building for an Exposed Floor Joist

The failure during fire exposure is assumed to be caused by charring of the three exposed sides of a joist; this loss of section, coupled with the strength-reducing influence of elevated temperature, causes rupture of the joist. Although burn-through and elevated temperatures of the unexposed surface can be additional failure criteria, they are not considered in this analysis. (These failure criteria relate directly to the floor-subfloor design that can be analyzed separately.) Load sharing and composite action are not accounted for directly in the analysis; however, they should eventually be included in an experimental verification of the model.

A typical floor-joist section is shown in figure 2; the shaded region shows an idealized charred area. Schaffer *(34)* reports bottom corners round when charring occurs; furthermore, the radius of the corners can be approximated by the depth of char. To account for this rounding by the moment of inertia would complicate the computations in the analysis, and it is clear that the error involved by assuming straight boundaries is of minor concern.

By use of the flexure formula, an equation can be written to quantify failure in a fire situation as

$$\frac{M\ Y\ (t_f, C)}{I(t_f, C)} = \alpha B \qquad (2)$$

where

M = applied moment caused by both dead and live loads (in.-lb)

t_f = time-to-failure (min)

$Y(t_f, C)$ = distance to extreme fiber being a function of time-to-failure and char rate (in.)

$I(t_f, C)$ = moment of inertia about an axis midheight the remaining uncharred section (in.^{4})

α = an exposed joist performance factor that relates normal-temperature strength to high-temperature strength

B = joist modulus of rupture at room temperature (lb/in.^{2})

This model is similar to that used by others for large beams under fire exposure *(20,21);* it also neglects any contribution to strength by the flooring itself.

The selection of the model needs some justification. At room temperature α = 1, and the model is exact with the thought that modulus of rupture is an idealized linear state. The actual state of stress is nonlinear, but the model is adequate for design especially if "depth effect" is considered. In a fire situation, the nonlinearities are expected to worsen because the joist cross section will not maintain a uniform temperature. The movement of the neutral axis caused by a nonuniform modulus of elasticity (MOE) resulting from a nonuniform temperature profile can be expected. At the same time, the compressive and the tensile strengths of the wood fibers are reduced because of elevated temperatures [Schaffer *(33)*]. It may be possible to model the net effect of the mentioned behavior if coupled with the normal-temperature nonlinearities of bending, but this has not been reported in the literature. By introducing the exposed joist performance factor, α, these unknowns will be accounted for in an empirical sense. In addition, the factor α will account for the rounding of the corners and to some degree, load sharing and composite action of the flooring-joist assembly.

By referring to figure 2, it can be seen that equation (2) can be rewritten as

$$\frac{M\,(d - C\,t_f)\,/2}{(b - 2C\,t_f)\,(d - C\,t_f)^3\,/12} = \alpha B \qquad (3)$$

where

b = initial joist width (in.)

d = initial joist depth (in.)

The remaining variables have been defined with equation (2). All of the factors except b and d are treated as random variables. By rearranging equation (3), a cubic equation in time, t_f results

$$\frac{6M}{\alpha B} = bd^2 - 2Cd\,(d + b)\,t_f + C^2\,(b + 4d)\,t_f^2 - 2C^3\,t_f^3 \qquad (4)$$

Whereas cubic equations can be readily solved by hand calculation or computer, the derivation of the statistics of the variable t_f would be cumbersome. This led the authors to investigate the error introduced in t_f by dropping the cubic term and simply solving the quadratic equation for t_f. Fortunately, the errors introduced are negligible, ranging from 1.58 percent for a nominal 2 by 6 (38 by 140 mm) to 0.35 percent for a nominal 2 by 12 (38 by 286 mm). It must be emphasized that this approximation was shown to be adequate for only nominal 2 by 6 (38 by 140 mm), nominal 2 by 8 (38 by 184 mm), nominal 2 by 10 (38 by 235 mm), and nominal 2 by 12's (38 by 286 mm).

The data and results of full-scale floor section (two Douglas-fir joists per assembly) tests reported by Lawson (20) were used to study the applicability of the model. A question immediately arises regarding the appropriate value of the modulus of rupture, B. Because the test for the measurement of B and the fire test are destructive, it is impossible to have knowledge of both properties for a single piece. At this impasse the alternative was to investigate the mean and the variability of the product of the two variables α and B. This was done in the following manner:

The 42 Douglas-fir floor assemblies tested by Lawson were divided into four grade groups–800, 1,200-1,600, 1,600, and clear-as shown in table 1. The data shown in the table indicate little difference in the apparent high-temperature modulus of rupture for the four different grades. More surprising are the calculated coefficients of variation (COV). From data collected by Hoyle *(15)* in a world search of lumber data, a value of 0.45 for the COV of B is typical for Construction grade joist. With all grades combined, the Ω was only 0.271, which shows E-119 exposure *(3)* apparently does have a variance-reducing influence on B just as Sunley *(38)* suggested.

To scrutinize the model further, an attempt was made to predict the fire endurance of two Douglas-fir assemblies tested by Son *(35).* Structural failures occurred at 11.63 and 13.00 minutes for nominal 2 by 10 and 2 by 8 joist floors, respectively. By assuming the 2 by 10 and 2 by 8 joist floors of similar quality as those of the Lawson report, i.e., αB = 1,165 pounds per square inch (lb/in.^{2}) (8,032 kPa), the predicted time-to-failure was 2.58 minutes. The large discrepancy between actual and predicted time is attributable to the difference between the live load levels used by Lawson *(20)* and Son. In Son's tests, the joists were stressed to 100 percent of the allowable design stress, as is specified by ASTM E-119, whereas the load levels used in the Lawson tests ranged from only 200 to 917 lb/in.^{2} (1,378 to 6,322 kPa), which is approximately 16 to 75 percent of the allowable design stress. This results in failure times calculated using figure 1 of 23 and 11.4 minutes, respectively, for a nominal 2 by 8 joist floor as Son tested. Hence, as expected, the lower the load level, the greater is the time-to-failure; thus, more thermal degradation is allowed to occur. Beams more heavily loaded will have shorter times-to-failure and less thermal degradation. The right side of equation *(3),* representing the strength change as influenced by temperature rise, cannot account for heat accumulation degrading the cross-sectional strength unless some measure of time dependence is introduced. By making several data plots, the following model was developed to include this kind of time dependence in which the variables have been previously defined.

Table 1.–Apparent high-temperature modulus of rupture, αB, for each grade group

Grade	Sample size	Apparent rupture strength		Coefficient of variation (COV)
	N	αB[1]		$\Omega_{\alpha B}$
		Lb/in.^{2}	kPa	
800	20	1,126	7,764	0.238
1,200-1,600	15	1.126	8,384	.320
1,600	2	1,264	8,715	.442
Clear	5	1,266	8,729	.199
Combined	42	1,182	8,150	.271

[1] Constant char rate, C, of 0.025 in./min (0.0635 mm/min) was used in calculation; theretore, Ω values reported are an upper bound because they include variability of char rate.

$$\frac{M(d - Ct_f)/2}{(b - 2Ct_f)(d - Ct_f)^3/12} = \frac{B}{1 + \left(\frac{b + 2d}{bd}\right)\gamma t_f} \qquad (5)$$

The $[(b + 2d)\gamma t_f]/(bd)$ term may be viewed as a time-dependent geometric factor to account for heat flowing into the cross section, bd, through the perimeter, b + 2d. Although visual inspection of the data plots suggests using this model, some variation of the model may be more suitable. Again, as before, the cubic term t_f of equation (4) is negligible. A least-squares nonlinear regression analysis was conducted on five variations of equation (4) as shown in table 2. The models were fitted to the 42 full-scale floor section tests of Lawson *(20).*

The second model, a single parameter of table 2, is seen as the preferred model because the residual standard deviation is only slightly greater than that of the two-parameter model listed first in the table. The range of predicted times-to. failure for the 42 floor assemblies was 7 to 29 minutes. This shows the selected model is a reliable predictor if it is recognized that the residual standard deviation of 2.57 minutes includes the variability of αB as shown in table 1.

Solving equation (5) for t_f by omitting the cubic, results in

$$t_f = \frac{2Cd(d + b) + 6MK\gamma/B}{} - \frac{\sqrt{\{2Cd(d + b) + 6MK\gamma/B\}^2 - 4C^2(b + 4d)(bd^2 - 6M/B)}}{2C^2(b + 4d)} \qquad (6)$$

where K = (b + 2d)/bd, which is an explicit expression for the time-to-failure. Time-to-failure, t_f, is compatible to the previously defied fire duration t_d, which is the load variable.

Results predicted by equation (5) were compared with results of four floor fire-endurance tests obtained by the NFPA (National Forest Products Association) *(24,25,26,27).* The actual times-to-failure to carry load versus those predicted are given in table 3; the predicted times are consistently and significantly less than the times-to-failure of the whole floor assembly. This deviation can be explained by the model parameter derivation based on the results of Lawson *(20).* Lawson conducted fire-endurance tests of paired Douglas-fir joists with essentially noncontinuous floor sheathing. The NFPA tests are of assemblies of many joists and a more or less continuous floor sheathing. These assemblies result in load-sharing between joists and increased load-carrying capacity of the sheathing that is not similarly reflected in the

Table 2.– Least-squares nonlinear regression analysis on five different variations of a time-to-structural-failure model[1]

Model[2]			Parameter estimates	Residual standard deviation
				Min
$\frac{M(d - Ct_f)/2}{(b - 2Ct_f)(d - Ct_f)^3/12}$	=	$\frac{B}{\gamma_0 + \gamma_1 Kt_f}$	$\gamma_0 = 0.296$, $\gamma_1 = 0.206$	2.54
	=	$\frac{B}{1 + K\gamma t_f}$	$\gamma = 0.170$	2.57
	=	$\frac{B}{1 + K\gamma_0\gamma_1 t_f}$	$\gamma_0 = 1.20$, $\gamma_1 = 0.160$	2.60
	=	$\frac{B}{1 + \gamma t_f}$	$\gamma = 0.216$	2.74
	=	$\frac{B}{1 + K(\gamma_1 t_f + \gamma_2 t_f^2)}$	$\gamma_1 = -0.324$, $\gamma_2 = 0.0328$	3.26

[1] In each variation, 42 data points were used to estimate either one or two parameters, depending on form of the model. Parameters must carry necessary units to make equations dimensionally homogeneous.
[2] K = (b + 2 * d)/(b * d).

Table 3.–Predicted and actual times-to-failure for NFPA unprotected floor fire-endurance tests *(24,25,26,27)* [1]

Sample	Nominal size	Applied joist moment	$\overline{B^2}/$	C	Predicted t_f	Assembly–observed t_f	Joist[3] observed t_f
	In.	In.-lb	Lb/in.^{2}	In./min	Min	Min	Min
No. 2 Douglas-fir "S-dry" w/vinyl tile, 19/32 in. plywood	2 x 8	19,054	4,308	0.0245	5.42	10.2	5.0
No. 2 Douglas-fir "S-dry" w/nylon carpet, 19/32 in. plywood	2 x 8	19,054	4,308	0.0245	5.42	12.86	11.5
No. 2 MG southern pine "S-dry" w/vinyl tile, 23/32 in. plywood	2 x 10	31,017	5,730	0.03	7.01	13.34	9.0
No. 2 MG southern pine "S-dry" w/nylon carpet, 23/32 in. plywood	2 x 10	31,017	5,730	0.03	7.01	12.06	12.06

[1] NFPA, National Forest Products Association; italicized numbers in parentheses refer to Literature Cited at end of paper.
[2] Douglas-fir rupture strength, from (76); southern pine rupture strength, from (7).
[3] Failure time for first joists to fail; not assembly failure time.

paired joist tests by Lawson. If the time is noted when the first joist ruptures in the NFPA tests, the difference between the model-predicted results and those actually observed are closer in two of the tests in which such failure was observed. This, again, illustrates the need for a degrade parameter, g, or other parameters that include both the effect of load-sharing and that of floor sheathing. As a result, these types of replicate experiments are planned.

Model for Exposed Floor Truss

The lower chord of a floor truss is subjected to both bending and tension, and the well-known interaction equation is used for design purposes.

$$1 = \frac{f_b}{F_b} + \frac{f_t}{F_t} \leq 1 \qquad (7)$$

Here f_b and f_t denote applied stresses; F_b and F_t, allowable design stresses in bending and tension, respectively.

As in previous reliability work at the Forest Products Laboratory *(37),* this interaction equation can be modified to indicate failure (with some reservations discussed in the report). However, in a fire-exposure case, one parameter needs to be estimated; thus some slight inaccuracy in the neighborhood of the combined stresses associated with a floor truss will be corrected. The failure equation for fire exposure would read

$$\alpha = \frac{f_b}{B} + \frac{f_t}{T} = \frac{1}{1 + g(b,d,t_f,\gamma)} \qquad (8)$$

where the right side of the equation has a form similar to that for the exposed floor joist. Function g accounts for the thermal degrade of the section, and its arguments are later defined. B is the modulus of rupture from which F_b was derived; and T, the ultimate tensile strength property from which the design value F_t was derived.

Because four-sided fire exposure of the lower chord in a floor truss is critical, expansion of the interaction formula for this case is given in the following equation. (It is assumed that the mode of failure is rupture of the lower chord. The upper chord has only three-side exposure, and the webs are only stressed to approximately one-half the level of the lower chord.)

$$\frac{\dfrac{P}{(b - 2C\,t_f)(d - 2C\,t_f)}}{T} + \frac{\dfrac{M(d - 2C\,t_f)/2}{(b - 2C\,t_f)(d - 2C\,t_f)^3/12}}{B} = \frac{1}{1 + \gamma K\,t_f} \qquad (9)$$

where

K = $2(b + d)/(bd)$

γ = thermal degrade factor

P = axial tensile force due to dead plus live load

b = width

d = depth

C = char rate

t_f = time-to-failure

M = maximum bending moment caused by dead plus live load

B = modulus of rupture

T = ultimate tensile stress

Analogous to the floor-joist case, K is the ratio of the lower chord perimeter (or surface area for heat transfer) to the cross-sectional area (or volume for heat storage). After some manipulation, a cubic equation results:

$$\{-8C^3\}\,t_f^3 + \left\{4C^2(b + 2d) + \frac{2PC\,\gamma K}{T}\right\}t_f^2 + \left\{-2dC(d + 2b) - \frac{Pd}{T}\gamma K + \frac{2PC}{T} - \frac{6M\,\gamma K}{B}\right\}t_f + \left\{bd^2 - \frac{Pd}{T} - \frac{6M}{B}\right\} = 0 \qquad (10)$$

This equation will later be solved for t_f and used to estimate assembly reliability.

Model Parameters for an Exposed Floor Truss

To properly estimate model parameters, test data on 2 by 4 assembly members under combined tension and bending are required. Unfortunately, no data are available for this purpose. Schaffer *(31),* however, has conducted fire-exposure tests of constantly tension-loaded Select Structural coast Douglas-fir and southern pine 2 by 4 members. The time-to-failure was recorded (table 4).

Table 4.—Fire endurance of 2 by 4's under constant tensile load[1]

Douglas-fir, coast		Southern pine	
Test	Failure time	Test	Failure time
	Min		Min
P = 6,100 lb, 90 pct F_t		P = 6,100 lb, 83 pct F_t	
1	11.20	1	10.00
2	7.67	2	11.61
3	9.35	3	12.85
4	11.25	4	12.34
5	8.74	5	11.80
Mean	9.64	Mean	11.72
Standard deviation	1.57	Standard deviation	1.08
P = 4,960 lb, 73 pct F_t			
6	9.24		
7	9.96		
8	13.36		
9	13.92		
Mean	11.62		
Standard deviation	2.36		

[1] Select Structural allowable stresses for Douglas-fir and southern pine from 1977 National Design Specifications.

For pure tension, the failure model reduces to

$$P(1 + \gamma K t_f) = T(b - 2C t_f)(d - 2C t_f) \quad (11)$$

This expression is easy to deal with, because it is only a quadratic in t_f. After solving it for t_f, the results are

$$t = \frac{2T\ C(b + d) + P\gamma K}{} - \frac{\sqrt{\{ 2T\ C(b + d) + P\gamma K \}^2 - 16T\ C^2 (Tbd - P)}}{8T\ C^2} \quad (12)$$

where the minus root is the meaningful root.

An estimate is needed for the mean tensile strength, $\underline{T}$, and char rate, $\underline{C}$, to determine γ for the available tension fire test data,

An estimate of $\underline{T}$ is available for inland Douglas-fir Select Structural [Hoyle *(14)*]. Based on a sample size of 30, the average tensile strength value was 5,020 lb/in.^{2} (34,600 kPa) with a COV of 0.388. This value can be compared to what might be calculated using normal distribution theory and the allowable tensile stress. From the 1977 National Design Specification *(28)* the allowable tension value for Select Structural Douglas-fir/larch is 1,200 lb/in^2 Using the calculated COV of 0.388, the mean value is determined to be 6,811 lb/in.^{2} by the following formula:

$$1{,}200 = (\bar{T} - 1.645 * COV * \bar{T})/2.1 \quad (13)$$

This value is significantly larger than the actual mean of 5,020 that illustrates the non-normal nature of tension data. This shows, therefore, the mean value obtained from lumber tests should be used whenever possible for a grade and a species in question.

The nine Douglas-fir fire and tension test results can then be used to estimate γ for Douglas-fir. By using $\underline{T}$ = 5,020 and C = 0.0245 inch per minute, γ was estimated to be 0.113 with a residual standard deviation of the time-to-failure of 1.829 minutes.

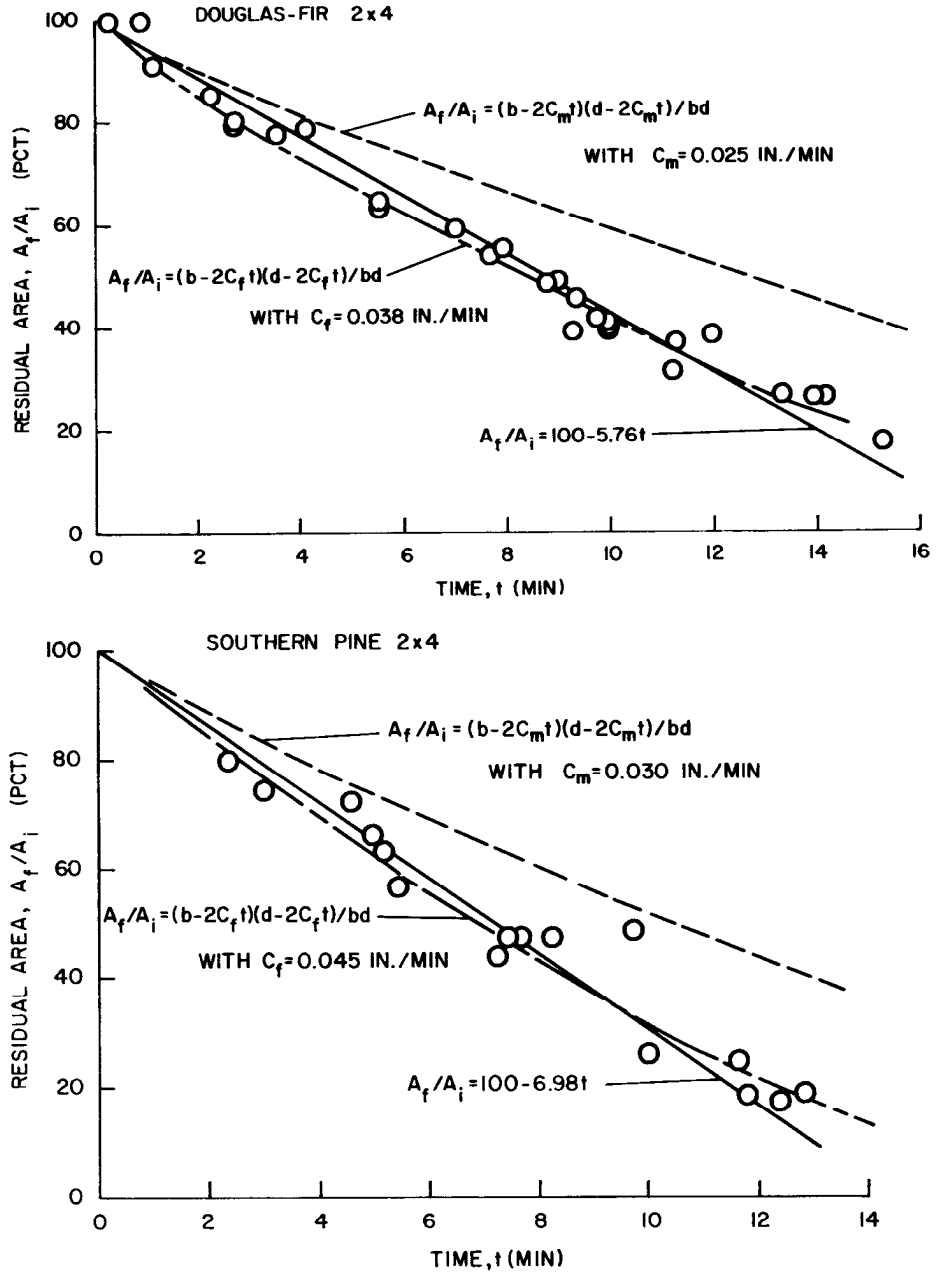

Figure 3.—Residual cross-sectional area divided by initial area (pct) of coast Douglas-fir (top) and southern pine (bottom) nominal 2 by 4 (1- 5/8 by 3- 5/8) members with duration of exposure to ASTM E- 119 fire conditions. Top curves result from using the mean species charring rate, $\underline{C_M}$, of 0.025 and of 0.030 in./min for large sections of coast Douglas-fir and southern pine, respectively. Bottom curves from using an effective charring rate, $\underline{C_f}$ of 0.038 and of 0.45 in./min for coast Douglas-fir and southern pine, respectively. Straight lines are linear regression fits to actual data in which lines were forced through 100 percent at time equal to zero. (Model Y = bX was fitted to one residual area/initial area.) Equation of the curves is given by 100(b -2Ct)(d -2Ct)/(bd).

(M 148 528)
(M 148 529)

A similar estimate of the fire-exposure reduction factor γ can be made for the southern pine test results of table 4. The southern pine lumber tested was almost clear of defects and ungraded. The lumber appeared to be of a quality at least as good as Select Structural. There are data [Hoyle and Maloney *(17)*] that show high-quality southern pine (2400f machine stress rated (MSR)) is stronger in tension than is high-quality Douglas-fir (2400f MSR)—the ratio in strengths being 1.24. To arrive at a mean value for the tensile strength $\underline{T}$ of Select Structural southern pine, the 5,020 lb/in.^{2} value for Douglas-fir was multiplied by 1.24 to yield 6,233 lblin.^{2} for southern pine. Using a mean char rate for southern pine of 0.03 inch per minute *(32)* in a nonlinear regression analysis of the fire test results, the yield is a γ of 0.0839 inch per minute with a residual standard deviation of the time-to-failure of 1.077 minutes.

Both species values of the reduction factor, γ, (0.113 for Douglas-fir, 0.0839 for southern pine) are substantially lower than that of 0.17 for the floor-joist assembly described in the preceding section. The reasons for this are not clear. It is known, however, that smaller sections (2 by 4, compared to 2 by 8 or 2 by 10's) are likely to undergo more rapid reduction in cross section than are larger. The difference for 2 by 4 sections of Douglas-fir and southern pine are shown in figure 3 (top and bottom, respectively) as a function of fire-exposure time.

The developed model and the parameters may be used to estimate the structural failure of a given floor-truss assembly. This was done for the truss shown in figure 4; the lumber of the floor truss is No. 1 Dense KD southern pine. B for No. 1 Dense southern pine was obtained from table 2 of Doyle and Markwardt *(7).* Because tensile strength data for Dense No. 1 were not available, data for No. 1 KD southern pine were taken from Doyle and Markwardt *(8).* The published value of 5,706 lb/in.^{2} was adjusted to 5,646 lb/in.^{2} to reflect current standards by Forest Products Laboratory personnel.

The truss was-then analyzed with a Purdue Plane Structures Analyzer *(36),* and as normally done, the center panel of the lower chord was most highly stressed with an axial force of 4,209 pounds and a bending moment of 140 inch-pounds. A summary of the input parameters can now be given for the fire-tested floor truss.

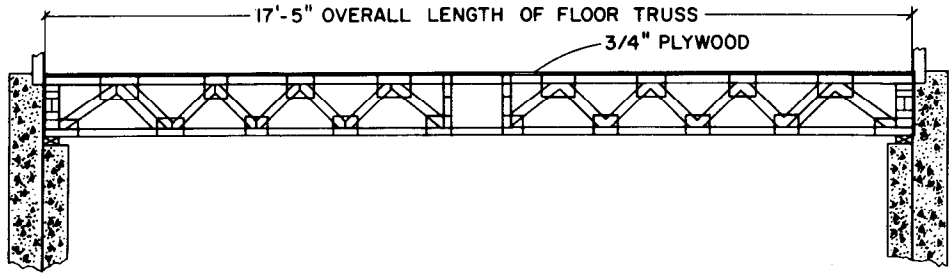

Figure 4.—Floor-truss design subjected to test conditions of ASTM E- 119. Upper chord was loaded with tanks simulating a uniform load of 55.1 lb/ft^2 that resulted in a combined live and dead load of 60 lb/ft^2.

(M 148 527)

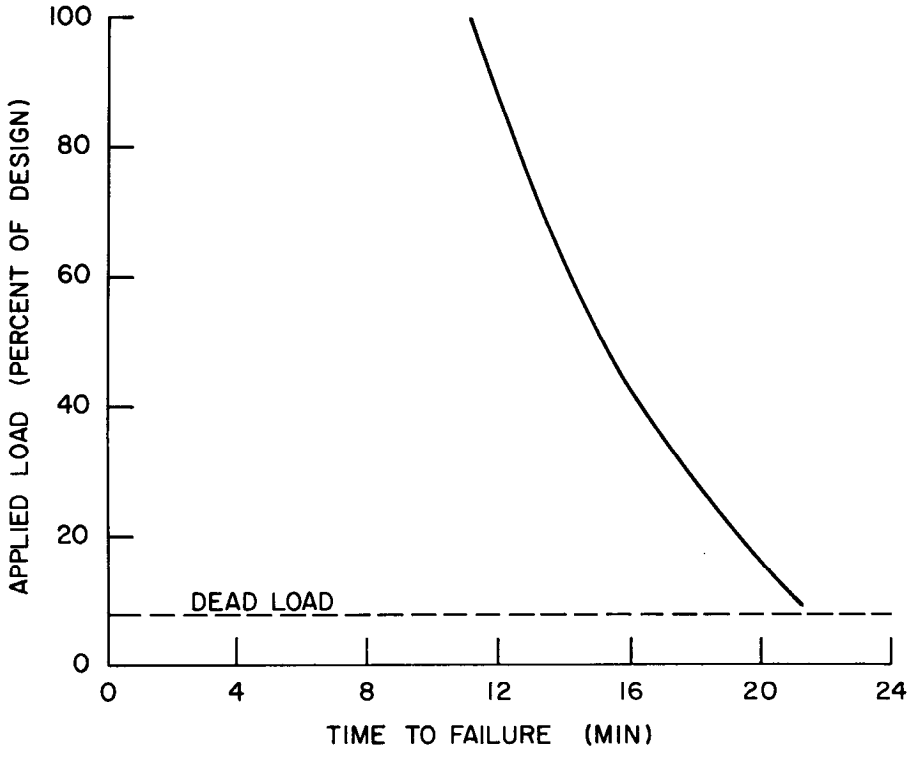

Figure 5.—Relationship of applied load to time-to-failure for floor-truss assembly of figure 4.

(M 148 530)

γ = 0.0839 inch per minute

$\underline{P}$ = 4,209 pounds

$\underline{b}$ = 3.5 inches

$\underline{d}$ = 1.5 inches

$\underline{C}$ = 0.03 inch per minute

$\underline{M}$ = 140 inches-pounds

$\underline{B}$ = 9,410 pounds per square inch

$\underline{T}$ = 5,646 pounds per square inch

Substitution into and solution of the failure-model equation *(10)* results in a time-to-failure estimate of 11.2 minutes; the actual failure time resulting in a fire endurance test was estimated at 10.2 minutes *(10).* This test continued to be conducted under reduced load until 14.6 minutes, when fire exposure was terminated without collapse occurring. The predicted time-to-failure falls within this 10- to

15- minute range. This result is most promising for future use of the model.

An interesting examination is how time-to-failure is altered for the same truss by reducing the applied load. The failure-model equation predicts times-to-failure as a function of applied load as shown in figure 5. For reduction in load to 50 percent of full design, it is seen 5 minutes is added to the predicted time under full design load. If there were no load on the floor assembly except the dead weight (4.9 lb/ft^2) of the assembly itself, a failure time of 21.1 minutes could result. Hence, failure times greater than this are theoretically impossible for this truss design.

Estimating Floor-Assembly Safety

In the preceding paragraphs the authors developed models for predicting the time-to-failure of two floor-assembly types, and have given an accepted model to predict severity of fire exposure. They are given in units of time.

Using the standard reliability notation, the assembly time-to-failure and the time duration of fire exposure, t_f and t_d, are denoted as follows:

$$R = t_f \tag{14}$$

and

$$S = t_d \tag{15}$$

With R and S defined, the fire reliability (Rel) of an exposed joist or floor truss (as a part of a floor), given a fully developed fire, is given by

$$\text{Rel} = \Pr(R > S) \tag{16}$$

which reads the probability (Pr) that the fire resistance is greater than that of the fire load. It is convenient for calculations R and S to be independent. In other words, the fire load and associated parameters cannot be correlated to the members' resistance, char rate, and other factors. Conversely, structural load, member resistance, and char rate cannot be influenced by fire load. Unfortunately, it is known that char rate is correlated with the variables of equation (1) that have been discussed by Schaffer *(34).* However, in practice, the joist or component will be exposed to a standard fire condition such as ASTM E-119 in which char rate will not be influenced by variables W, F, A, and H. The real problem lies in the fire severity of E-119 not being representative of the fire severities associated with actual fire situations.

It is thus appropriate in this analysis to treat R and S as independent random variables.

Using the approach of Zahn *(42),*

$$\text{Rel} = \Pr(R/S > 1) \tag{17}$$

and taking the logarithm of the arguments

$$\text{Rel} = \Pr(\ln(R/S) > 0) \tag{18}$$

By making the following definition

$$J = \ln(R/S) \tag{19}$$

there results

$$\text{Rel} = \Pr(J > 0) = 1 - F_J\,(0) \tag{20}$$

where F_J the cumulative density function of the variable J.

Using first-order, second-moment approximations, the mean and the variance are given by

$$\mu_J \cong \ln \frac{\mu_R}{\mu_S} \tag{21}$$

$$\sigma_J^2 \cong \Omega_R^2 + \Omega_S^2 \tag{22}$$

Standardizing J,

$$\lambda = \frac{J - \mu_J}{\sigma_J} \tag{23}$$

and

$$\text{Rel} = \Pr\left(\lambda > -\frac{\mu_J}{\sigma_J}\right) \tag{24}$$

If the distribution of A is similar in all applications, then the variable

$$\beta = \frac{\mu_J}{\sigma_J} = \frac{\ln \frac{\mu_R}{\mu_S}}{\sqrt{\Omega_R^2 + \Omega_S^2}} \tag{25}$$

is a consistent measure of fire safety. *b* is normally called the safety index.

The next step is to estimate the means and the variances of the resistance and the load, μ_R and μ_S, σ_R^2 and $\sigma^2 S$ A first-order approximation of the mean, E, of a function, Z, where

$$Z = h(X_1, X_2, \ldots X_n) \tag{26}$$

is given by

$$E(Z) = h[E(X_1), E(X)_2), \ldots, E(Z_n)] \tag{27}$$

Performing this operation on equation (6) for the conventional joist-floor assembly and replacing the expected values, *E,* of the component variables by their statistical estimates denoted by a superscript bar, the result is

$$\mu_R \cong \frac{2\bar{C}d(d + b) + 6\bar{M}K\bar{\gamma}/B}{} - \frac{\sqrt{\{2\bar{C}d(d + b) + 6\bar{M}K\bar{\gamma}/B\}^2 - 4\bar{C}^2(b + 4d)(bd^2 - 6\bar{M}/B)}}{2C^2(b + 4d)} \tag{28}$$

$$\mu_R \cong \frac{-b_1 - \sqrt{b_1^2 - 4\,a_1 c_1}}{2a_1} \tag{29}$$

where

$$a_1 = 4\bar{C}^2(b + 2d) + 2\bar{P}\bar{C}\,\bar{\gamma}\,K/T \tag{29a}$$

$$b_1 = 2\bar{P}\bar{C}/T - 2d\bar{C}(d + 2b) - \bar{P}d\,\bar{\gamma}\,K/T - 6\bar{M}\,\bar{\gamma}\,K/B \tag{29b}$$

$$c_1 = bd^2 - \bar{P}d/T - 6\bar{M}/B \tag{29c}$$

Again, γ treated as a random variable and B and T are treated as constants equal to the average bending and tensile strength of the lumber grade.

The same operation is performed on the fire-severity equation, which results in

$$\mu_S \cong \frac{\bar{W}\,\bar{A}_F}{5.5\,\bar{A}_W \bar{H}^{1/2}} \tag{30}$$

The first-order, second-moment approximation of the variance of Z defined by equation (26) is given by

$$\sigma_Z^2 \cong \sum_{i=1}^{n} \left(\frac{\partial h}{\partial X_i}\right)^2 \sigma_{X_i}^2 \tag{31}$$

provided the X_i's are uncorrelated. The partials are evaluated at their respective mean values.

In the expression for the load variable S, the floor area A_F and window area A_W could be correlated because it would be expected A_W be some way related to the perimeter that involves the same variables as the floor area. However, because data are not available to substantiate this correlation, a zero correlation will be assumed. In light-frame construction, the other pairs of variables lack an obvious cause for correlation. Without showing the computations

$$\sigma_S^2 = \overline{S^2}\,(\Omega_W^2 + \Omega_{A_F}^2 + \Omega_{A_W}^2 + \Omega_H^2/4) \tag{32}$$

$$\Omega_S^2 = \Omega_W^2 + \Omega_{A_F}^2 + \Omega_{A_W}^2 + \Omega_H^2/4 \tag{33}$$

where the Ω's are the respective COV.

In the equation for resistance, or time-to-failure, of the floor joist, no obvious confounding correlations appear. Using equation (31) to estimate the variance of equation (6), three partial derivatives must be calculated. These derivatives are lengthy so they will only be substituted into equation (31) symbolically, which resultsin

$$\sigma_R^2 = \left(\frac{\partial R}{\partial C}\right)^2 \sigma_C^2 + \left(\frac{\partial R}{\partial \alpha}\right)^2 \sigma_\alpha^2 + \left(\frac{\partial R}{\partial M}\right)^2 \sigma_M^2 \tag{34}$$

Again, the partial derivatives are evaluated at the mean values of the component variables.

For the floor truss, component variables M and P are perfectly correlated with a correlation of + 1. Therefore, equation (31) must be altered to include correlations as

$$\sigma_Z^2 = \sum_{i=1}^{n} \left(\frac{\partial h}{\partial X_i}\right)^2 \sigma_{X_i}^2 + 2\sum_{i}^{n}\sum_{j}^{n}{}_{i<j} \left(\frac{\partial h}{\partial X_i}\right)\left(\frac{\partial h}{\partial X_j}\right) \rho_{ij}\,\sigma_{X_i}\,\sigma_{X_j} \tag{35}$$

where ρ_{ij} is the correlation coefficient between variables X_i and X_j. By assuming zero correlation for the other variables, as for the floor joist, application of equation (35) to equation (29) yields

$$\sigma_R^2 = \left(\frac{\partial R}{\partial C}\right)^2 \sigma_C^2 + \left(\frac{\partial R}{\partial \gamma}\right)^2 \sigma_\gamma^2 + \left(\frac{\partial R}{\partial M}\right)^2 \sigma_M^2 + \left(\frac{\partial R}{\partial P}\right)^2 \sigma_P^2 + 2\left(\frac{\partial R}{\partial M}\right)\left(\frac{\partial R}{\partial P}\right) \sigma_M\,\sigma_P \tag{36}$$

The variance of the char rate, $\sigma_C{}^2$, has been estimated by reanalyzing data previously developed *(32).* The mean charring rate, C, and estimated variance, $\sigma_C{}^2$, under ASTM E-119 fire exposure for coast Douglas-fir and southern pine are

coast Douglas-fir
$\bar{C} = 0.0245$ in./min, $\sigma_C{}^2 = 5.56 \times 10^{-6}$

southern pine
$\bar{C} = 0.0299$ in./min, $\sigma_C{}^2 = 3.80 \times 10^{-6}$

The variance in the strength-reduction factor, γ, is unavailable. Substantial information is available on the variation of the applied load that defines the variation of M and P. Eventually, all the variances denoted by σ^2 will be replaced by statistical estimates from the data available or from the results of present research. Finally, the COV of R can be obtained, and is given by

$$\Omega_R = \frac{\sigma_R}{\mu_R} \tag{37}$$

As statistical data become available for the various parameters, the components of the safety index equation (25) may be defined, and comparisons of assembly safety accomplished.

Discussion

Probability of Failure

Knowing the distribution of γ of equation (23), the probability of structural failure of an exposed floor assembly, given the occurrence of a fully developed fire, can be calculated. In general, the distribution of γ is not known, and some assumption about it must be made. Common practice is to assume γ follows a normal distribution. In this analysis, the assumption of normality will be used realizing the probability estimated will be in the neighborhood of 0.1; thus deviations from normality from one application to the next will not be amplified. Under these assumptions, the probability of failure, P_f, is given by

$$P_f = \Phi(-\beta) = 1 - \Phi(\beta) \tag{38}$$

where ϕ is the cumulative area under the standard normal curve.

Code Calibration

In recent years the use of engineering components has increased dramatically. Often these components are fabricated with manmade materials, and the variability of the mechanical properties of these materials is substantially less than the variability of a natural material, such as wood. The shortcoming of the present "fire-rating" system is it does not account for the variability of the component response, although it may account for the average response of a component to fire. Quite simply, the present system of fire rating allows using two different components with an equal "fire rating" of, say, 1 hour, but at the same time the components have unequal safety levels.

The situation of two components with unequal safety levels can best be illustrated by a hypothetical example using equation (25). The example involves calculating the safety index for two different components, the only difference being the variability of the time-to-failure or resistance of the component.

For the example, assume that the following data in table 5 apply to two component types A and B. Each column is identical except for the column indicating the COV of fire resistance. On applying equation (25) to each type, the resulting safety indices are $b_A = 0.98$ and $b_B = 1.24$, which indicates an unequal level of safety. Converting these b's by equation (38) to probabilities, the results are 0.163 for component A and 0.107 for component B. It may be hastily argued that no difference exists between a 16.3 percent and a 10.7 percent failure rate, but on closer examination, calculations show component B could have a fire-endurance time of 51.9 minutes and have the same relative safety as component A at 60 minutes!

The hypothetical situation illustrates just one possibility of how the safety index could be used to obtain equal safety and give a "fair

Table 5.—Level of safety of components, A and B, with same average fire-endurance time (60 min) but different variabilities (COV of 0.25 versus 0.5)

Component	μ_R	W_R	μ_S	W_S
	Min		Min	
A	60	0.5	30	0.5
B	60	.25	30	.5

[1] Each component is exposed to an identically distributed fire load, as illustrated by last two columns; result is an unequal level of safety, as calculated by the safety index equation (25).

shake" to new materials and new components.

In the future it may be possible to identify at what point fire load, hence fire duration, have different expected values and different levels of variability. In this type of situation, a lower or a higher fire-rated component may be needed.

Summary and Conclusions

1. Time-to-structural-failure prediction models, based on the residual load-carrying capacity of fire-exposed floor elements, are given for two unprotected light-frame wood floor assemblies. A reduction in strength factor, α, was calculated from the limited fire-exposure test data according to two equations:

Joist floor

$$\frac{MY(t_f,C)}{I(t_f,C)} = \alpha B$$

Floor truss

$$\frac{f_b}{B} + \frac{f_t}{T} = \alpha$$

The thermal reduction factor is further a function of fireexposure time and the geometry of small cross sections:

Joist floor

$$\alpha = 1/(1 + \gamma K t_f)$$

where

$$\gamma = 0.170 \text{ (in./min)}$$

Floor truss

$$\alpha = 1/(1 + \gamma K t_f)$$

where for

Douglas-fir

$\gamma = 0.113$ in./min

Southern pine

$\gamma = 0.0839$ in./min

2. A comparison of predicted times-to-failure versus those actually observed for four unprotected joist-floor assemblies results in predicted times consistently less than those observed. The difference is attributed to three factors:

—The model has parameters quantified on the basis of fire-endurance tests of paired joists with negligible floor sheathing.

—The actual floors consist of many joists with load sharing likely.

—The actual floors have floor sheathing that contributes to increased load-carrying capacity.

Predicted times-to-failure for two of the floor assemblies were similar to those of observed times-to-failure of the first joist (not total floor assembly failure).

3. The time-to-failure model with input parameters for a southern pine floor-truss assembly that had been fire-endurance tested resulted in a predicted time-to-failure of 11.2 minutes. The fire test had been concluded at 10.2 minutes because of excessive deflection of the floor assembly, without evidence of collapse.

4. The time-to-failure model for a loaded and a fire-exposed floor-truss assembly was employed to examine the influence of various floor loads on time-to-failure. At full-design load, failure was predicted to be 11.2 minutes; but with only dead load, the period was extended to 21.1 minutes. This indicates the sensitivity of this type of fire-exposed assembly to the load applied during test. In this analysis it was critically assumed that failure of the lower chord, rather than connectors, would result in collapse of the assembly.

5. The procedure to use for calculating safety of unprotected light-frame floor assemblies is given. An example is provided to demonstrate how variability in assemblies can affect the comparative safety of assemblies.

6. The predictive capabilities for both of the proposed assembly models require further fire-exposure experiments for independent validation and parameter refinement.

Nomenclature

A_F	Floor area
A_W	Window or opening area
b	Beam breadth
B	Modulus of rupture at room temperature
C	Char rate
d	Beam depth
F	Allowable stress
H	Window or opening height
I	Moment of inertia
K	Ratio of perimeter to area of cross section.
M	Applied moment
MOE	Modulus of elasticity
P	Axial load
R	Member or structural resistance
S	Applied "load"
T	Ultimate tensile stress
t_D	Fire duration
W	Fuel load density
Y	Distance from beam centroid to outer fiber
α	Ratio of high-temperature to normal-temperature strength
β	Safety index
γ	Thermal degrade factor
μ	Statistical mean
ρ	Correlation coefficient
σ	Standard deviation
Φ	Accumulative density function for standard normal distribution
Ω	Coefficient of variation

Subscripts

b	Bending
d	Duration
f	Failure
R	Resistance
S	Load
t	Tension

Literature Cited

1. Abrams, M. S.
   1978. Behavior of inorganic materials in fire. ASTM E-5 Symposium on design of buildings for fire safety. Boston Park Plaza, Boston, Mass.

2. American Iron and Steel Institute.
   1978. Designing fire protection for steel columns. American Iron and Steel Inst., Washington, D.C.

3. American Society for Testing and Materials.
   1977. Standard methods of fire tests of building construction and materials (E-119). Annual Book of ASTM Standards, Part 18. ASTM, Philadelphia, Pa. p. 739-757.

4. Ang, A. H.-S., and others.
   1972. Structural safety-A literature review. J. Structural Division, Proc. ASCE 98 (ST4):845-884.

5. Burros, R. H.
   1975. Probability of failure of building from fire. J. Structural Division, Proc. ASCE 101 (ST9):1947-1960.

6. Coward, S.K.D.
   1975. A simulation method for estimating the distribution of fire severities in office rooms. Build. Res. Establ. Current Pap. 31/75. Fire Res. Stn., Borehamwood Hertfordshire, England, WD6 2BL.

7. Doyle, D. V., and L. J. Markwardt.
   1966. Properties of southern pine in relation to strength grading of dimension lumber. U.S. Dep. Agric., For. Serv. Res. Pap. FPL 64. Forest Products Laboratory, Madison, Wis.

8. Doyle, D. V., and L. J. Markwardt.
   1967. Tension parallel-to-grain properties of southern pine dimension lumber. U.S. Dep. Agric., For. Serv. Res. Pap. FPL 84. Forest Products Laboratory, Madison, Wis.

9. Ellingwood, B., and J. R. Shaver.
   1977. Reliability of RC beams subjected to fire. J. Structural Division, Proc. ASCE 103 (ST5):1047-1059.

10. Factory Mutual Research.
    1977. Fire endurance test of floor-ceiling assembly. Wood trusses with plywood floor design. ASTM E-119-76, FC-250. Factory Mutual Res.

11. Gross, D.
    1977. Measurements of fire loads and calculations of fire severity. Wood and Fiber 9(1):72-85.

12. Gustaferro, A. H., and D. P. Jenny.
    1978. Alternative to fire testing-Design of concrete structures for fire endurance. Southern Building. June-July:24-28.

13. Gypsum Association.
    1978. Fire resistance design manual. Gypsum Assoc., Evanston, III.

14. Hoyle, R. J.
    1976. Digest of tension parallel-to-grain strength of Inland North Douglas-fir. Res. Rep. 76/57-22. Coll. of Eng. Res. Div., Washington State Univ., Pullman, Wash.

15. Hoyle, R. J.
    1977. Review of world literature on characteristic distribution of properties of 2-inch softwood dimension lumber. Res. Rep. 77157-11. Coll. of Eng. Res. Div., Washington State Univ., Pullman, Wash.

16. Hoyle, R. J., and T. M. Maloney.
    1976. Bending strength tests of visually graded 2-inch dimension lumber from western Canada. Res. Rep. No. 76157-36. Coll. of Eng., Res. Div., Washington State Univ., Pullman, Wash.

17. Hoyle, R. J., and T. M. Maloney.
1976. Tension strength and bending elastic modulus of truss joist machine stress rated 2 by 4 lumber. Res. Rep. 76/57-44. Coil. of Eng. Res. Div., Washington State Univ., Pullman, Wash.

18. Kameda, H., and T. Koike.
1975. Reliability theory of deteriorating structures. J. Structural Division, Proc. ASCE 101 (ST1):295-310.

19. Knudsen, R. M., and A. P. Schniewind.
1975. Performance of structural wood members exposed to fire. Forest Products J. 25(2):23-32.

20. Lawson, D. I.
1952. The fire endurance of timber beams and floors. Structural Engineer, 30(3):27-33.

21. Lie, T. T.
1972. Fire and buildings. Applied Science Publishers, Ltd. Ripple Road, Barking, Essex, England. 276 p.

22. Lie, T. T.
1972. Optimum fire resistance of structures. J. Structural Division, Proc. ASCE 98(ST1):215-232.

23. Lie, T. T.
1974. Characteristic temperature curves for various fire severities. Fire Technology 10(4):315-326.

24. National Forest Products Association.
1974. ASTM E-119 fire endurance test—2- by 10-inch wood joist floor assembly. Design FC 209. Nat. For. Prod. Assoc., Washington, D.C.

25. National Forest Products Association.
1974. ASTM E-119 fire endurance test—2- by 10-inch wood joist floor assembly. Design FC 212. Nat. For. Prod. Assoc., Washington, D.C.

26. National Forest Products Association.
1974. ASTM E-119 fire endurance test—2- by 8-inch wood joist floor assembly. Design FC 213. Nat. For. Prod. Assoc., Washington, D.C.

27. National Forest Products Association.
1974. ASTM E-119 fire endurance test—2- by 8-inch wood joist floor assembly. Design FC 216. Nat. For. Prod. Assoc., Washington, D.C.

28. National Forest Products Association.
1977. Design values for wood construction-a supplement to the 1977 edition of national design specification for wood construction. Washington, D.C. 20036. 20 p.

29. Raes, H.
1977. The influence of a building's construction and fire load on the intensity and duration of a fire. Fire Prevention Sci. and Technol. 16:4-16.

30. Robertson, A. F., and D. Gross.
1970. Fire load, fire severity, and fire endurance. Special Technical Publication 464. American Society for Testing and Materials, Philadelphia, Pa. p. 329.

31. Schaffer, E. L.
1961. The effects of fire on selected structural timber joints. M.S. thesis, Univ. of Wis., Madison, Wis.

32. Schaffer, E. L.
1966. Charring rate of selected woods-transverse to grain. U.S. Dep. Agric., For. Serv. Res. Pap. FPL 69. Forest Products Laboratory, Madison, Wis.

33. Schaffer, E. L.
1973. Effect of pyrolytic temperatures on the longitudinal strength of dry Douglas-fir. ASTM J. Test Evaluation 1(4):319-329.

34. Schaffer, E. L.
1977. State of structural timber fire endurance. Wood and Fiber 9(2):145-170.

35. Son, B. C.
1973. Fire endurance tests on unprotected wood-floor constructions for single-family residences. Center for Build. Tech. Inst. for Applied Technol., National Bureau of Standards, NBSIR 734263. Washington, D.C.

36. Suddarth, S. K.
1972. A computerized wood engineering system: Purdue plane structures analyzer. U.S. Dep. Agric., For. Serv. Res. Pap. FPL 168. Forest Products Laboratory, Madison, Wis.

37. Suddarth, S. K., F. Woeste, and W. Galligan.
1978. Differential reliability: Probabilistic engineering applied to wood members in bending/tension. U.S. Dep. Agric., For. Serv. Res. Pap. FPL 302. Forest Products Laboratory, Madison, Wis.

38. Sunley, J. G.
Design concepts for fire-resisting constructions. Behavior of wood products in fire. Pergamon Press, Oxford. p. 95-101.

39. Thomas, P. H., and C. R. Theobald.
1977. Part 2: The burning rates and durations of fires. Fire Prevention Sci. and Technol. 17:15-16.

40. U.S. Department of Commerce/National Bureau of Standards.
1978. Building research translation-the behavior of concrete structures in fire-a method for prediction by calculation. NBS Tech. Note 710-7110. U.S. Government Printing Office, Washington, D.C.

41. U.S. Department of Housing and Urban Development.
1973. HUD minimum property standards-one- and two-family dwellings. U.S. HUD, Washington, D.C.

42. Zahn, J. J.
1977. Reliability-based design procedures for wood structures. Forest Products J. 27(3):21-28.

2.0-17-1/80

U.S. GOVERNMENT PRINTING OFFICE: 1980-750-027/31