U.S.D.A., FOREST SERVICE
RESEARCH PAPER
FPL 174
1972

FOREST PRODUCTS LABORATORY
FOREST SERVICE
U.S. DEPARTMENT OF AGRICULTURE

RELATIONSHIP OF TENSILE STRENGTH OF SOUTHERN PINE DIMENSION LUMBER TO INHERENT CHARACTERISTICS

APPROVED
COPY FILED
SEP 1 - 1972
LIBRARIAN

ABSTRACT

Several relationships between tensile strength and some lumber characteristics that can be measured nondestructively are evaluated. From 72 to 83 percent of the variation in tensile strength of several hundred southern pine 2- by 4- and 2- by 8-inch specimens was accounted for by various linear combinations of strength ratio of knots, stiffness, slope of grain, and specific gravity, Strength ratio of knots and stiffness were the most significant variables. Evaluated in conjunction with other variables, stiffness measured over a 4-foot span improved the coefficient of determination of 2 by 4's by about 0.5 compared to stiffness measured over a 15-foot span; three methods to determine strenagth ration of knots gave coefficients of determination that differend by a maximum of 0.08. A method for extimating lower 5 percent exclusion values for tensile strength is also presented.

TABLE OF CONTENTS

Page

Abstract

Introduction 1

Experimental Methods 2

Methods of Analysis 3
- Slope of Grain 3
- Knots 3
- Compression Wood 5
- Bending Stiffness Modulus 5
- Other Factors 6
- Specimens Excluded 6
- Nomenclature for Variables 6

Results 7

Summary 21

Literature Cited 22

Appendix 1. -- Coordinate Method of Measuring Knots 23

Appendix 2.-- Tensile Strength Ratio For Lumber with Knots 24

Appendix 3.--Lower Exclusion Limit From predicted Values 30

RELATIONSHIP OF TENSILE STRENGTH OF SOUTHERN PINE DIMENSION LUMBER TO INHERENT CHARACTERISTICS

By C.C. GERHARDS, Engineer

FOREST PRODUCTS LABORATORY [1]
FOREST SERVICE
U. S. DEPARTMENT OF AGRICULTURE

INTRODUCTION

The increasing use of wood trussed rafters and laminated timbers and the changes in methods of grading and in determining allowable stresses bring about the need to reassess tensile strength of structural lumber. Allowable stresses assigned lumber for tensile applications before 1968 were traditionally considered equal to the allowable stresses for bending members (1).[2] The allowable bending stresses were assumed conservative for tension because within a species the maximum stress in tension of a small clear specimen is greater than that of the moduluis of rupture in bending. In the early 1960's, it was apparent that lumber was not so strong in tension as believed. Tension tests of 1 aby 6 laminating stock (13) and machine-graded lumber (8) revealed some surprisingly low-strength pieces. Other pieces, however, were very strong in tension and suggested a rather broad range for tensile strength of lumber. Siimes (11) also observed this broad range in saw timber in Finland.

To account for some of the large variation in tensile strength in lumber, several attempts have been made to relate tensile strength to various measurable characteristics. Some of the variation in saw timber in Finland was related to the largest knot or the largest sum of knot sizes in any 6-inch length (11). For European redwood (Scotch pine) Dawe (3) found a good correlation (a correlation coefficient r = -0.865) between tensile strength and knot area ratio in specimens necked down to 5/8 inch by 3 inches. However, this study appeared limited to a single knot in the necked-down section in which knot size ranged to 1-1/2 inches in diameter. Zehrt (13) found slope of grain influences tensile strength of lumber as it does tensile strength of small clear specimens of wood.

Nemeth (8) reported that the maximum tensile stress for 2 by 4's and 2 by 8's was lower than the modulus of rupture for machine grades with comparable moduli of elasticity. Although this led to his suggestion that design values for machine-graded bending members should be reduced bny 20 percent for tensile strength applications, a later study (7) showed that a larger reduction is warranted. For current visual grades of lumber, allowable tensile stresses are from 55 to 67 percent of allowable bending stresses, depending on lumber size.

This study was undertaken to evaluate relationships of tensile strength to the following characteristics and properties of lumber:

Visual characteristics	measurable properties
Knots	Flexural stiffness
Slope of grain	Torsional stiffness
Checks	Specific gravity
Growth rate	
Amount of latewood	
Compression wood	

[1] Maintained at Madison, Wis., in cooperation with the University of Wisconsin.

[2] Underlined numbers in parentheses refer to Literature Cited at the end of this report.

The sample evaluated consisted of specimens collected for a survey of tensile strength of stress-graded southern pine dimension (4) plus some additional below grade pieces. The survey sample consisted of 300 2 by 4's and 150 2 by 8's from 10 southern pine mills. At each mill, ten 2 by 4's and five 2 by 8's were selected at random from each of the three grades: No. 1 KD, No. 2 KD, and No. 3 MG KD.[3] All pieces were 16 feet long, The remaining part of the sample included ten 2 by 4's and five 2 by 8's also selected at each of the 10 mills from 16-foot stock that did not meet the minimum requirements of No. 3 grade,

A study by Orosz (10) based on the same lumber sample, related tensile strength to bending strength ratio and either long-span (15 feet) or short-span (4 feet) modulus of elasticity. Bending strength ratios (BSR) were determined according to ASTM D 245 (1) for each piece on the basis of size and location of knots and slope of grain. Where the knot wqas the controlling factor, the ASTM D 245 "surface method"[4] was used to measure knot size. The moduli of elasticity, measured in flatwise bending, will be referred to here as long-span or short-span flexural stiffness moduli.

EXPERIMENTAL METHODS

The test methods used for determining tensile strength, long-span flexural stiffness (EL), short-span flexural stiffness (ES), and full-length torsional stiffness (GL) have been described (4,10). Before testing tensile strength, a record was made of knots, slope of grain, shake, warp, and compression wood. After the tension test, specific gravity, growth rate, percent latewood, and percent compression wood were measured on a wafer of clear wood cut from near fhs principal failure point of each piece.

Some visual characteristics were difficult to quantify. For example, measuring depth of a surface check over its full length or quantifying gross amounts of compression wood in a whole specimen was for all practical purposes not feasible. Thus these two characteristics were only qualitatively measured before test.

Warp, a visual characteristic, was recorded as the sum of bow and crook for a specimen. Other visual characteristics were determined at or adjacent to cross sections suspected as probable points of failure. Because the section where failure would occur in testing was not always obvous, several cross sections were considered for many specimens.+

The general slope of grain adjacent to each selected section and the cross-sectional dimensions, the absence or presence of tree pith, and all knots in each selected section were measured. The method of knot measurement, called the coordinate method, differs from methods given in D 245. The coordinate method considers the projected area of a knot (Appendix 1).

After the tension test, a 1-inch wafer was cut from near the point of failure for determining moisture content. Each wafer was later cut into 1/8- and 1/2-inch thicknesses, and the 1/2-inch thick wafer was sanded smooth on one side. Ovendry weights and volumes, percent latewood growth rate by rings per inch, and percent compression wood were measured on these wafers, and an ovendry specific gravity computed. The annual ring growth was measured along a radial line that visually appeared to best represent the piece. To determine compression wood, the 1/8-inch thick wafers were observed over a light-box.

[3] Nomenclature used here is based on "1963 Standard Grading Rules for Southern Pine Lumber," published bny the Southern Pine Inspections Bureau, Pensacola, Fla.

[4] ASTM D 245 has, since its inception, provided that knots sizes can be measured on the surfaces of the lumber by a set of rules that are referred to as the "surface method."

METHODS OF ANALYSIS

Multiple linear least-squares regression (5) was used here because it is the most objective method to analyze the multiplicity of variables and the data of this study and because the variables can be evaluated simultaneously. This method was applied separately to the data for 2 by 4's and for the 2 by 8's. The general regression equation

$$Y = \beta_0 + \beta_1 X_1 + \beta_2 X_2 + \ldots + \beta_K X_K \qquad (1)$$

relates the response variable Y (tensile strength) through the regression coefficients β_i's to a linear combination of K variables X_i.

A problem in this kind of analysis is the use of the proper form for the X variables. The forms used here are discussed in the following sections.

Slope of Grain

It is generally known that strength and slope of grain are not linearly related (9, 123). Because their relationship is complex, it is necessary to find some transformation for slope of grain that will relate it linearly to tensile strength.

Data on 59 of the 2 by 4's made it possible to explore the relationship between tensile strength and slope of grain in specimens free of other defects such as checks and shake. However, 15 of the 59 specimens failed near knots. The data on strength for the 59 specimens are plotted in figure 1 directly against the square root of the tangent of the slope of grain ($\sqrt{\tan}$). The curved line, which represents the interaction equation of Norris ((9), equation 13) fit by trial and error to minimize the sums of squared deviations, accounted for about 61 percent of the variation in tensile strength. If the slope of grain is limited to a maximum angle of about 25°, a straight line fits figure 1 fairly well. Thus the $\sqrt{\tan}$ is a reasonable approximating transformation of the data on slope of grain. This transformation is used here because other plots of the data on different transformations did not suggest anything more suitable.

Slope of grain was also included in bending strength ratio, which is discussed in the following section.

Knots

Tensile strength of stress-graded lumber is assumed directly proportional to ASTM D 245 bending strength ratio (BSR). The strength ratio model, used with certain methods of measuring knots, is conceptually the ratio of load-carrying capacity of a member with a knot to that of a similar member without a knot.

In the model, a knot is assumed a cylindrical void, normal in direction to either a narrow face or a wide face. A knot on a wide face is assumed to be either on the centerline or at the edge. Consequently the modeled knot appears as a rectangular void in a lumber cross section which is retangular. Examples are diagrammed in the following (b, bredth; h, height).

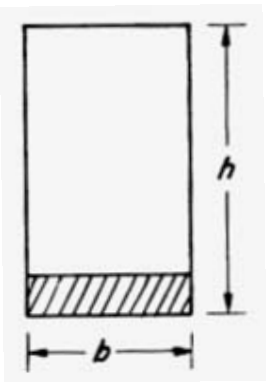

Edge Knot

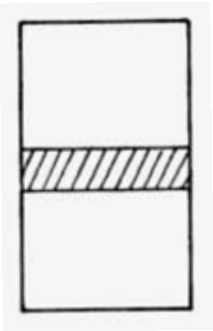

Centerline Knot

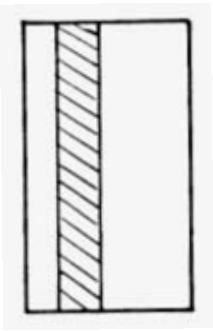

Narrow-face Knot

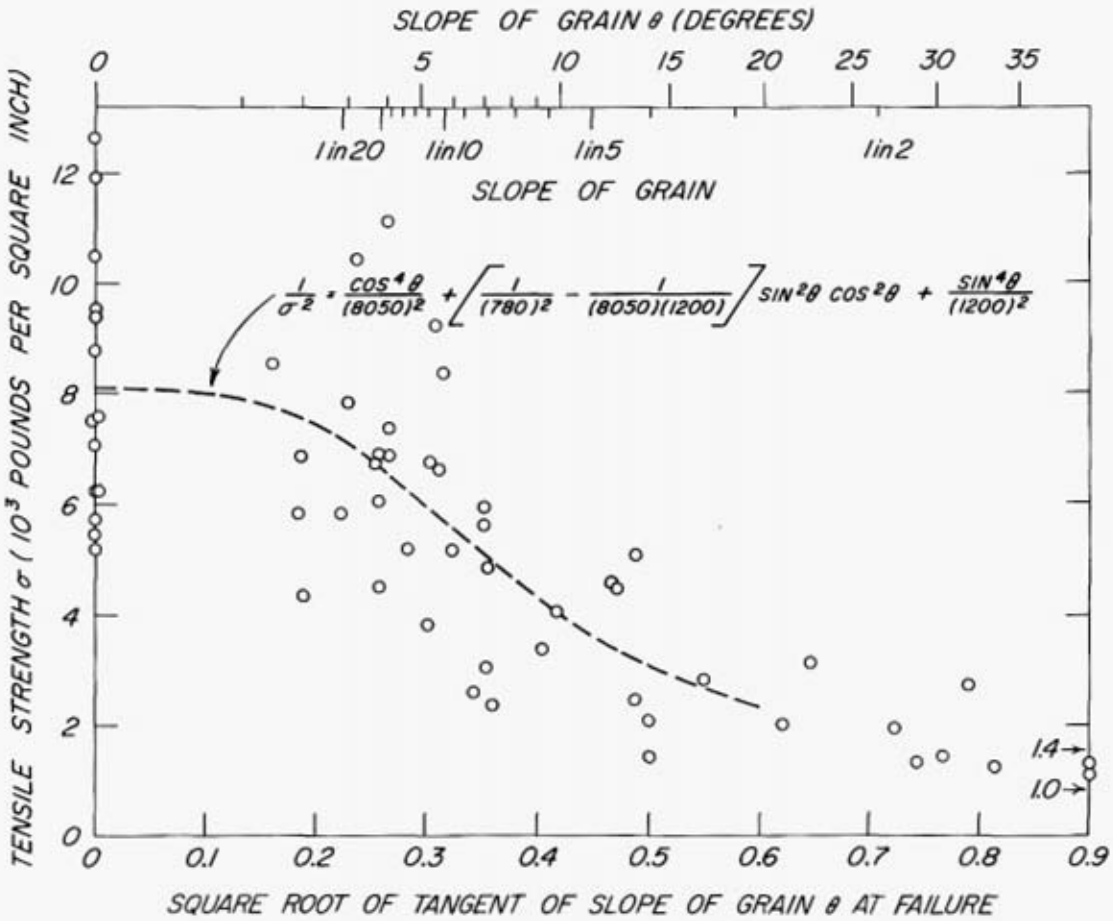

Figure 1.--Relationship of tensile strength to slope of grain.

M 139 190

Formulas for strength ratio are given in the appendix to ASTM D 245-70 (2).[5] In addition to assuming the knot a void area, stress-raising effects and bending of axially loaded members at eccentric knot cross sections are ignored Basically,

$$\mathrm{BSR} = \begin{cases} (1 - A_K/A'), \text{ for centerline or narrow-face knot} \\ (1 - A_K/A')^2, \text{ for edge knot} \end{cases}$$

where A' = bh, the gross area of cross section with the void knot area, A_K. For the edge knot, BSR can be considered the fractional residual section modulus available to resist load. For the centerline or the narrow-face knot, it is the fractional residual area available to resist load. Because BSR is currently used in stress grading lumber, it is one possible form for relating knots linearly to tensile strength.

In the ASTM D 245 concept, strength ratio is controlled by the size and location of the single knot in a piece or, if servere enough, by the slope of grain. Because lumber is not limited to a single knot at a cross section, a model was sought that would relate tensile strenth to multiple knots. According to Dawe (3), tensile strength is linearly related to knot area ratio (KAR), the

[5]The strength ratio models of ASTM D 245-70 contain com constants that are not important to this discussion and are ignored in the models presented.

fractional area of lumber cross section occupied by the projected area of a single knot. If a knot is considered a void, Dawe's result suggests that tensile strength may be linearly related to residual area available to resis tensile load--even if more than one knot is present. Residual area stressed in tension can be thought of as tensile area ratio (TAR) and

$$TAR = (1 - KAR)$$

For a single centerline or a single narrow-face rectangular knot area, TAR and BSR are conceptually the same. Thus, TAR, which can account for all projected areas of knots in a given cross section, is a second possible form for linearly relating knots to tensile strength.

There has been an increasing awareness that knots at the edge of a face cause a greater reduction in tensile strength than knots away from the edge (6). This is credited to the bending that takes place because the knot is eccentric to the axial tensile force. An exploratory analysis of the tensile strength of 268 of the 2 by 4's of this study indicated a greater edge knot effect. Orosz (10) offers a modification to BSR for tensile members with a single cylindrical edge knot. His model relates tensile strength ratio (TSR) to BSR by

$$TSR = BSR/(1 + 2KAR)$$

and is based on combined bending and tension theory. Schniewind and Lyon (12) experimented with another model.

Most knots are not cylindrical and do not project through a poice normal to a face; this is suggested by the various shapes of knots in Appendix 1. Therefore, unsymmetrical bending can be hypothesized during a tension test. A tensile strength ratio (TSR) that considers tension and unsymmetrical bending of the nonvoid areas of a cross section is derived in Appendix 2. The TSR model employs some rather complicated ratios of moments and products of inertia. It is applicable to multiple knots but reduces to the TSR form of Orosz for a single rectangular-shaped edge void and to BSR for a single rectangular-shaped centerline void. The TSR form in Appendix 2 is a third possible form for linearly relating knots to tensile strength.

This study evaluates tensile strength as a linear function of the three possible forms: BSR, TAR, and TSR. Both TSR and TAR are based on the coordinate method of measuring projected knot areas (Appendix 1) and were determined for the cross section where failure presumably occurred in each piece.[6] Bending strentgth ratio, however, used with the surface method of measuring knot size, was obtained before the piece was tested to failure. It is based on the single characteristic, either a knot or a slope of grain that yielded the lowest BSR for a piece. BSR may be equal to or lower than that for the failure section in a piece. Thus, TSR and TAR may be compared directly as predictors, but only a general comparison can be made with BSR. All three will be referred to as knot strength ratios, although some BSR values may sometimes apply to slope of grain rather than knots.

Compression Wood

Exploratory analysis indicated that tensile strength and compression wood were not correlated. The lack of correlation was probably due to the limited amount of compression wood in the sample evaluated; very few pieces had much compurssion wood in the failure zone. Because of lack of correlation in the exploratory analysis compression wood was not included as a variable in equation 1.

Bending Stiffness Modulus

As mentioned, flatwise modulus of elqasticity was measured over both long and short spans during this experiment for use in other studies. Thus tensile strength, assumed to be linearly related to stiffness, can be evaluated for two different types of stiffness. For the short span, the ES of the f4 feet containing the failure section was used rather than the minimus ES.

[6]The location of actual cross section that precipitated failure was not always definite because rupture seldom occurred across one particular section. Usually, failure progressed partly across one section, advanced to another to complete the rupture, but so rapidly that the initial point of failure could nor be definitely established.

Other Factors

The remaining single factors, specific gravity, warp, relative latewood, growth rate, and torsional stiffness modulus, were also assumed linearly related to tensile strength and were so entered in the regression analysis. Linear relationships have in the past been used to relate strength of clear wood to some of these properties. some two-factor interactions that involve strength ratio, slope of grain, specific gravity, latewood, and stiffness were also included in the analysis as being linearly related to tensile strength.

Specimens Excluded

Forty-four 2 by 4's and twelve 2 by 8's were excluded from the anslyses. A few had unusual characteristics, borer holes, cross tension cracks in localized compression wood or growth around a broken main stem: a few had data missing. Of the excluded 2 by 4's, most failed in conjunction with either slope of grain exceeding 25° or severe checks or shades. Severe checks and shakes were the general cause for excluding most of the 2 by 8's.

Nomenclature for Variables

The following nomenclature was used for the regression analyses:

Y = tensile strength
X_1 = fractional knot strength ratio
X_2 = $\sqrt{\tan}$ of slope of grain
X_3 = Specific gravity
X_4 = warp
X_5 = relative latewood
X_6 = growth rate
X_7 = bending stiffness modulus

Interation terms included were, with one exception, the following:

$X_8 = X_1X_2$
$X_9 = X_1X_3$
$X_{10} = X_1X_5$
$X_{11} = X_2X_3$
$X_{12} = X_1X_7$

The variables were in the following measures: Pounds per square inch, tensile strength; decimals, strength ratio; inches, warp; percent, relative latewood; reciprocal inches, growth rate; 10^6 pounds per square inch, stiffness modulus; and corresponding units for the interaction terms. the variable X_{11} was replaced with the torsional stiffness modulus, GL, in 10^3 pounds per square inch for certain analyses of data on the 2 by 4's.

The variables were related linearly by multiple least-square regression analysis with the maximum model limited to

$$Y = ß_0 + ß_1X_1 + ß_2X_2 + \ldots + ß_{12}X_{12} \qquad (2)$$

Because of the three possible methods of relating knots and the two possible methods of relating bending stiffness to tensile strength, six different regression analyses, each with 12 variableds, were run for each size of lumber.

For each regression analysis of 12 variables, there are

$$\binom{12}{1} + \binom{12}{2} + \binom{12}{3} + \ldots + \binom{12}{12} = 4095$$

possible submodels associated with the maximum model. This is a very large number of models most of which can be expected to turn out as insignificant, impractical, and not useful. For uncontrollable variables, as studied here, the regression analysis usually yields several statistically significant models about equally good in fitting the data. Selection of appropriate models becomes somewhat subjective. The criterion of statistical significance used throughout this report is based on rejecting or not rejecting at the 1 percent level the hypothesis that each $ß_i$ (excluding $ß_0$) equals zero after the remaining coefficients in the submodel are accounted for.

RESULTS

The final choice of model does not depend so much on the method of analysis as on the circumstances under which it will be used. Because of cost, ease of making measurements, or other factors, a user might choose a model that is less than the best according to the analysis, but one that is functional in his own situation. Therefore, several possible significant submodels are presented. Table 1 shows these submodels in B_i's, the least-square estimates of the regression coefficients (β_i's), under three general categories: (1) No variable intentionally excluded, (2) variables X_7 and X_{12} intentionally excluded, and (3) variables X_2, X_8 and X_{11} intentionally ex-

Table 1.--Coefficients of regression B_i for significant submodels of the model $Y = B_0 + B_1X_1 + B_2X_2 + \ldots + B_{12}X_{12}$

Lumber size	Submodel No.	Form of X_1	Form of X_7	B_0	B_1 for variables: X_1 = strength ratio in fractions	X_2 = $\sqrt{\tan}$ of grain angle in degrees	X_3 = specific gravity	X_4 = warp in inches	X_5 = latewood in percent	X_6 = growth rate in rings per inch	X_7 = bending stiffness modulus in 10^6 pounds per square inch	X_8 = X_1X_2	X_9 = X_1X_3	X_{10} = X_1X_5	X_{11} = X_2X_3	X_{12} = X_1X_7
NO VARIABLE INTENTIONALLY EXCLUDED																
2 x 4	41ES	TAR	ES	111			6,802				-3,531	2,360	-9,211			7,820
	41EL	TAR	EL	406							-1,215	-2,824				4,236
	42ES	TSR	ES	-74		2,566	-5,148				2,732	-8,236	9,602			
	42EL	TSR	EL	-857	2,520	2,231					1,054	-8561				1,956
	43ES	BSR	ES	107							757					3,158
	43EL	BSR	EL	835												3,300
2 x 8	81ES	TAR	ES	8,155	-13,761		-17,695					-1,880	30,432			2,369
	81EL	TAR	EL	7,713	-12,720		-17,453					-1,767	29,394			2,033
	82ES	TSR	ES	-1,240							1,505	-3,256	8,960			
	82EL	TSR	EL	-1,254							1,276	-3,021	9,174			
	83ES	BSR	ES	-2,975			5,733		-68.26		2,198			114.55		
	83EL	BSR	EL	-2,746			5,670		-76.02		1,844			123.99		
special case, X_{11} = torsional stiffness modulus is 10^3 pounds per square inch																
2 x 4	41ES-G	TAR	ES	1,819	-4,190		-3,443				-2,580	-1,840			20.70	6,932
	41EL-G	TAR	EL	-1,792							-1,087	-2,605			17.49	3,978
	43ES-G	BSR	ES	-916			-4,646				1,284				21.73	2,929
	43EL-G	BSR	EL	-1,239											16.80	3,140
VARIABLES X_7 AND X_{12} INTENTIONALLY EXCLUDED																
2 x 4	41	TAR		-2,977	3,461		7,130	-452.7	-84.36			-3,424		154.8		
	42	TSR		402				-376.7	25.16			-6,126	12,133			
	43	BSR		766				-284.4					10,112	42.0		
2 x 8	81	TAR		9,757	-15,440		-22,862					-2,535	43,119			
	82	TSR		227								-3,949	11,611			
	83	BSR		537	-5,998								-19,884			
VARIABLES X_2, X_8, AND X_{11} INTENTIONALLY EXCLUDED[1]																
2 x 4	141ES	TAR	ES	70			6,430				-3,179		-10,054			7,696
	141EL	TAR	EL	35							860					3,886
	142ES	TSR	ES	-640							1,470					2,624
	142EL	TSR	EL	-100							819					2,652
	143ES[2]	BSR	ES	102							757					3,158
	143EL[3]	BSR	EL	835												3,300
2 x 8	181ES	TAR	ES	8,048	-14,005		-17,294						29,528			2,550
	181EL	TAR	EL	7,561	-12,846		-17,008						28,339			2,199
	182ES	TSR	ES	-1,430							1,667		7,790			
	182EL	TSR	EL	-1,474							1,442		8,051			
	183ES[4]	BSR	ES	-2,975			5,733		-68.26		2,198			114.55		
	183EL[5]	BSR	EL	-2,746			5,670		-76.02		1,844			123.99		
Special case, X_{11} = torsional stiffness modulus in 10^3 pounds per square inch																
2 x 4	141ES-G	TAR	ES	1,890	-4,566		-4,648				-2,259				23.38	6,814

[1] Exccept for the special cases where X_{11} = EL, the torsional stiffness modulus in 10^3 p.s.i.

[2] Same as model No. 43ES.

[3] Same as model No. 43EL.

[4] Same as model No. 83ES.

[5] Same as model No. 83EL.

cluded. Models in the second category would be preferred if stiffness were not measured. If flexural stiffness is measured, models in category 3 may be preferred to those in category 1 because slope of grain is a property difficult to visually estimate in the normal grading process. Each of the submodels in table 1 was the "best" model (significant model with highest coefficient of determination) for the listed forms of variables.

The partial F-ratios (5) and the coefficients of determination (R^2) are listed in table 2. The partial F-ratios were used to establish the significance of each regression coefficient; each F-value exceeds the 1 percent level of significance.

The partial F-values are indicators of the importance of the variables; the higher the number, the more significant the variable in any model. Generalization about the importance of any one varuable is very difficult, however, because most of the models contain interaction terms. When not intentionally excluded, flexural stiffness seems very important for 2 by 4's, particularly when interacting with TAR or BSR; partial F-values for the interaction term range from 61 to 1069 depending on type of stiffness and strength ratio. For 2 by 8's, the immportance of flexural stiffness is not so obvious, since the interaction of TSR with specific gravity and the interaction of BSR with percent latewood have higher partial F-values.

Among other pertinent results that table 2 reveals, growth rate (X_6) was not a significant variable if other variables were considered to account for tensile strength. Warp (X_4) was generally unimportant; it was significant only in the three models for 2 by 4's when stiffness was intentionally excluded as a variable. Percent latewood (X_5) was generally unimportant except for 2 by 8's when the BSR type strength ration was employed and for the 2 by 4's when flexural stiffness was intentionally excluded. Torsional stiffness was important in at least some models for 2 by 4's; the importance of the variable was not studied for 2 by 8's, because residuals from the models suggested it would not be important.

The R^2 values in table 2 may be used to compare the fit of the 34 different submodels to the data; the higher the value, the better the fit. The best fit was provided by either 82ES or 82EL; for both, R^2 = 0.834. Submodel 41 with R^2 = 0.688 provided the poorest fit. Many of the submodels, however, accounted for about the same amount of variation in tensile strength. In addition, the data for the 2 by 8's generally showed a better fit than that for the 2 by 4's.

the R^2 values in table 2 can also be used to compare the different forms of strength ratio and flexural stiffness. Perusal of the R^2 values reveals the following two conclusions:

1) TSR is probably the best form for strength ratio. BSR is better than TAR for 2 by 4's, but not for 2 by 8's. The largest difference, 0.08 in R2 for TSR-BSR, occurred for 2 by 8's in which flexural stiffnesses was intentionally excluded (submodels 82 and 83). Other than that, no single form for strength ratio was better than any other form by more than about 0.005 in R^2.

2) For flexural stiffness, ES is the better of the two forms for 2 by 4's by about 0.04 to 0.06 in R2. For 2 by 8's neither of the forms is consistently better as tje cp,[arab;e R^2's do not differ by more than ±0.01.

The two general conclusions are, of course, dependent on other variables contained in the models. If all variables except either strength ratio or flexural stiffness are excluded, somewhat different conclusions are apparent.

The R^2 values for the simple models with either strength ratio or flexural stiffness alone are:

Type of--	R^2 (2 x 4's)	R^2 (2 x 8's)
Strength Ratio		
TAR	0.53	0.56
TSR	.58	.72
BSR	.66	.58
Flexural stiffness		
ES	.63	.63
EL	.49	.59

Thus TSR seems the best form of strength ratio for 2 by 8's and BSR for 2 by 4's. For flexural stiffness. ES is the better form for both sizes.

Table 2.--Partial F-ratio for each significant regression coefficient B_i in the presence of all others and coefficient of determination R^2 for the several models listed in table 1[1]

Sub-model No.	Degrees of freedom for hypothesized model	Partial F-ratio for B_i of: X_1 = strength ratio in fractions[2]	X_2 = $\sqrt{\tan}$ of grain angle in degrees	X_3 = specific gravity	X_4 = warp in inches	X_5 = latewood in percent	X_6 = growth rate in rings per inch	X_7 = bending stiffness modulus in 10^6 pounds per square inch	X_8 = (X_1X_2)	X_9 = (X_1X_3)	X_{10} = (X_1X_5)	X_{11}[2] = (X_2X_3)	X_{12} = (X_1X_7)	R^2
41ES	350			10.4				18.4	21.4	12.6			61.0	0.785
41EL	352							17.0	26.5				327	.736
42ES	350		11.9	21.5				192	42.1	335				.817
42EL	350	7.4	7.7					11.6	37.4				14.4	.779
43ES	353							9.0					266	.790
43EL	354												1,069	.751
81ES	182	15.3		9.6					9.3	18.6			42.1	.796
81EL	182	13.1		9.7					8.2	17.3			43.5	.797
82ES	184							35.1	17.8	216				.834
82EL	184							35.8	15.1	248				.834
83ES	183			13.6		34.8		61.0			101			.789
83EL	183			12.3		53.5		50.3			120			.780
41ES-G	349	14.5		6.9				13.4	13.5			29.2	71.9	.800
41EL-G	351							14.3	23.8			22.4	289	.752
43ES-G	351			14.6				21.6				35.5	241	.810
43EL-G	353											22.1	915	.765
41	349	11.7		28.0	17.2	10.8			32.3		19.9			.688
42	351				13.9	16.2			67.4	674				.729
43	352				7.8					98.3	7.9			.724
81	183	15.8		13.4					14.1	33.1				.749
82	185								22.6	655				.802
83	185	21.9								92.5				.722
141ES	351			8.8				14.2		14.3			55.8	.772
141EL	353							8.4					280	.716
142ES	353							48.8					282	.795
142EL	353							16.3					325	.735
143ES	353							9.0					266	.790
143EL	354												1,069	.751
181ES	183	15.2		8.8						16.8			48.0	.786
181EL	183	12.6		8.6						15.4			50.9	.788
182ES	185							40.5		188				.818
182EL	185							44.2		236				.821
183ES	185			13.6		34.8		61.0			101			.789
183EL	183			12.3		53.5		50.3			120			.780
141ES-G	350	16.7		12.9				10.1				37.2	67.1	.792

[1]All partial F-ratios exceed the 1 pct. level of significance requirement for testing the hypothesis that $\beta_i = 0$.

[2]Except for submodel numbers ending in "-G" where X_{11} = GL, the torsional stiffness modulus in 10^3 p.s.i.

Another simple model of interest is that with only the interaction of strength ratio and flexural stiffness (variable X_{12}). R^2 values are:

Interaction Type	R^2 (2 x 4's)	R^2 (2 x 8's)
TAR x ES	0.76	0.75
TAR x EL	.71	.76
TSR x ES	.77	.79
TSR x EL	.72	.81
BSR x ES	.78	.74
BSR x EL	.75	.75

Based on the R^2's for the interaction terms, BSR seems the best form of strength ratio for 2 by 4's but the worst for 2 by 8's; TSR is the best form for 2 by 8's; ES is the better form of stiffness for 2 by 4's, but EL is the better form for 2 by 8's. Except for the TSR's for 2 by 8's, however, none of the forms seems to be much better than any other.

Each line of regression coefficients and the appropriate X variables in table 1 represent a model for predicting mean values ($\hat{Y}$) of tensile strength. Although mean values are of general interest, users are primarily concerned with specifying values sufficiently low that the probability of failure under full design load is at a practical minimum For stress-graded lumber and plywood in the United States, this is generally the lower 5 percent exclusion limit based on test strength data modified for duration of load and use conditions. This report deals only with unadjusted tensile strength data developed directly from short-time tests (American Society for Testing and Materials, Standard Methods of Static Tests of Timbers in Structural Sizes. Designation: D 198).

The 5 percent exclusion limit for a wood property is usually computed on the basis of a univariate distribution. However, multivariate distributions are dealt with here.

The exclusion limit for multivariate distributions is complicated. A further complication arises if the dependent variable is not homogeneously distributed about a regression. The lack of homogeneous variance is shown in some of the plots of residuals ($Y-\hat{Y}$) from model 42ES (figures 2 through 7). Homogeneous variance requires the scatter of residuals to be independent of each variable. Most of the residual plots, however, reveal an increasing trend in the scatter of residuals. Model 42ES was chosen as typical. Residuals from other models showed similar trends.

Regardless of the complications, exclusion limits can be estimated, although subjectively, since some assumptions of data distribution must always be made. An equation suggested for estimating lower exclusion limits (Y_t) on tensile strength is

$$Y_t = \hat{Y} - t\sqrt{S^2\left[\hat{Y} + (\hat{Y})^2/(\Sigma Y_j)\right]} \qquad (3)$$

where Y = a tensile strength predicted by one of the models selected from table 1, t = the studentized value for a specified exclusion level (1.65 is used here for 5 percent lower exclusion limit), S^2 = a sample-based constant from table 3 for the selected model, (ΣY_j) = a sample-based constant (the sum of all tensile strengths of test specimens) equal to 1,217,400 p.s.i. for 2 by 4's and 561,346 p.s.i. for 2 by 8's. The exclusion limit equation is an expression of a prediction model, and can thus be solved for all levels of the X variables. The development of equation 3 along with some necessary assumptions are given in Appendix 3.

A graphical example of the equation for the lower exclusion limit is presented in figure 8 with the scatter diagram of the data of actual tensile strength for the test specimens versus strengths predicted by model 42ES. The number of falldowns (actual tensile strength below the exclusion limit) is 7, equivalent to 2 percent of all of the 2 by 4 test specimens.

Figure 8 also shows a comparison of juvenile wood and mature wood. The comparison can only be approximate because the distinction between juvenile and mature wood was based solely on the presence of the pith of the tree in the failure section. On this limited basis, specimens with juvenile wood appear no weaker than those not rated as juvenile for comparable TSR, ES, slope of grain, and specific gravity.

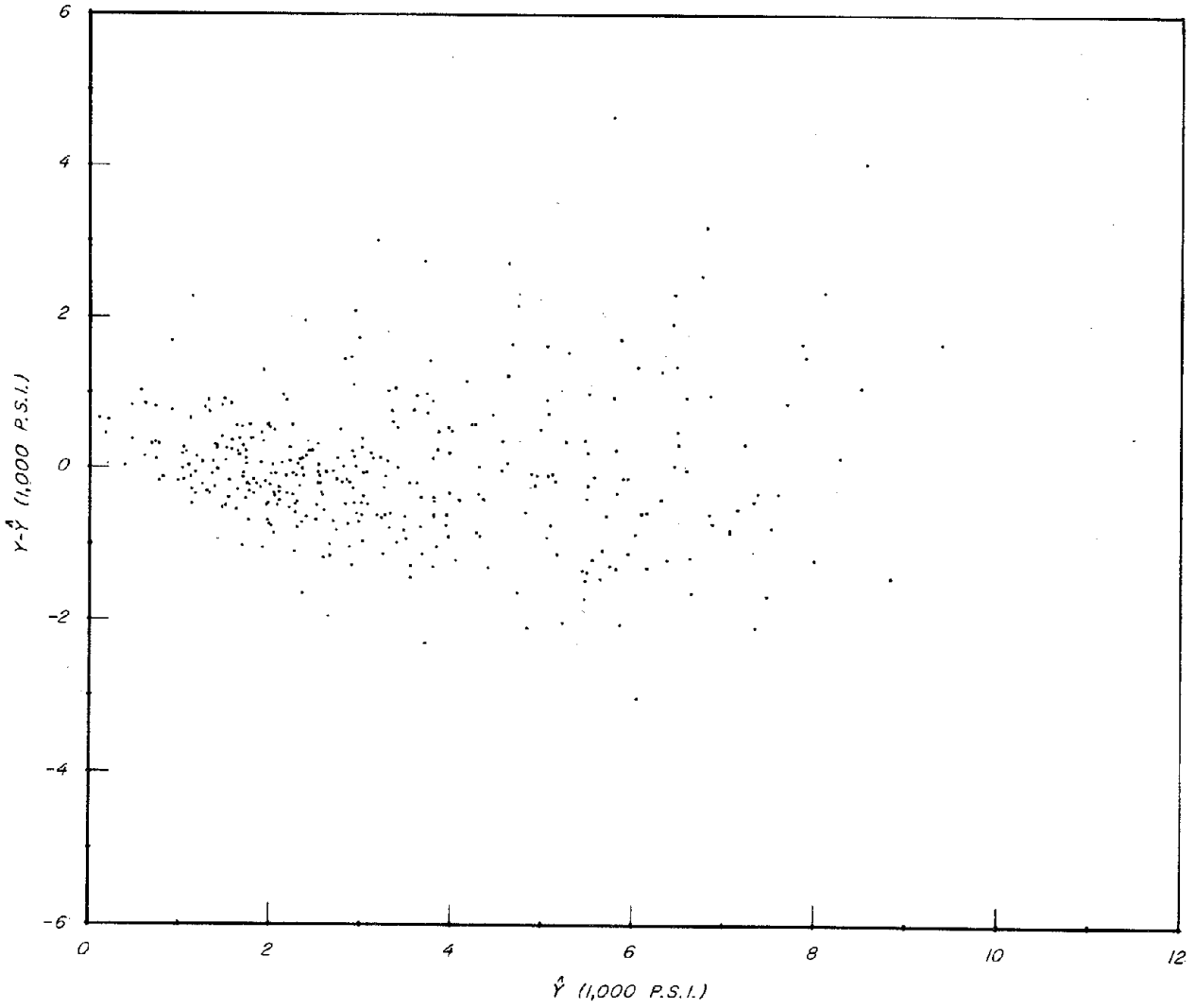

Figure 2.--Relationship of residuals of tensile strength Y - $\hat{Y}$ from model 42ES to tensile strength predicted $\hat{Y}$ by the model.

M 139 193

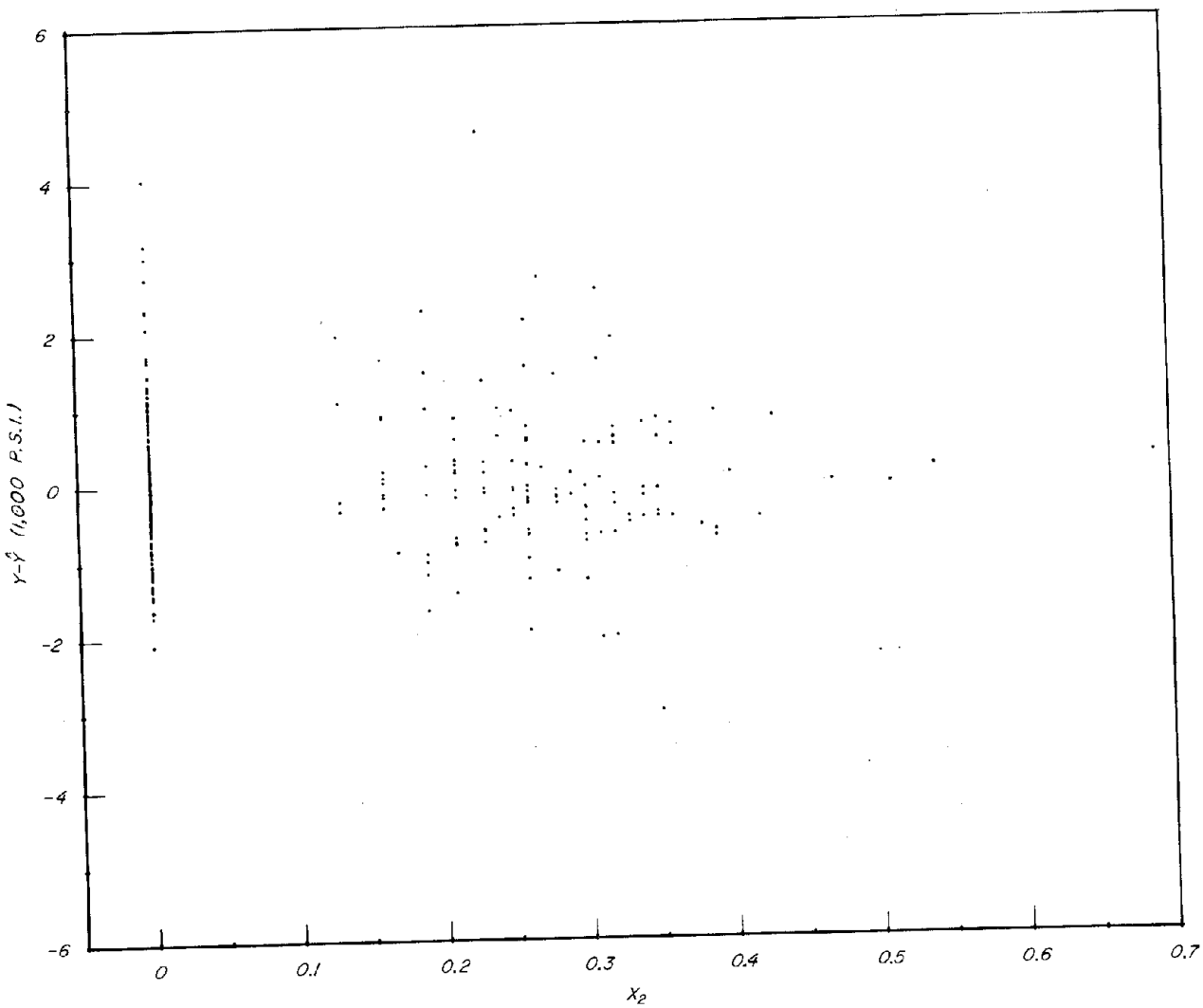

Figure 3.--Relationship of residuals of tensile strength $Y - \hat{Y}$ from model 42ES to slope of grain X_2.

M 139 192

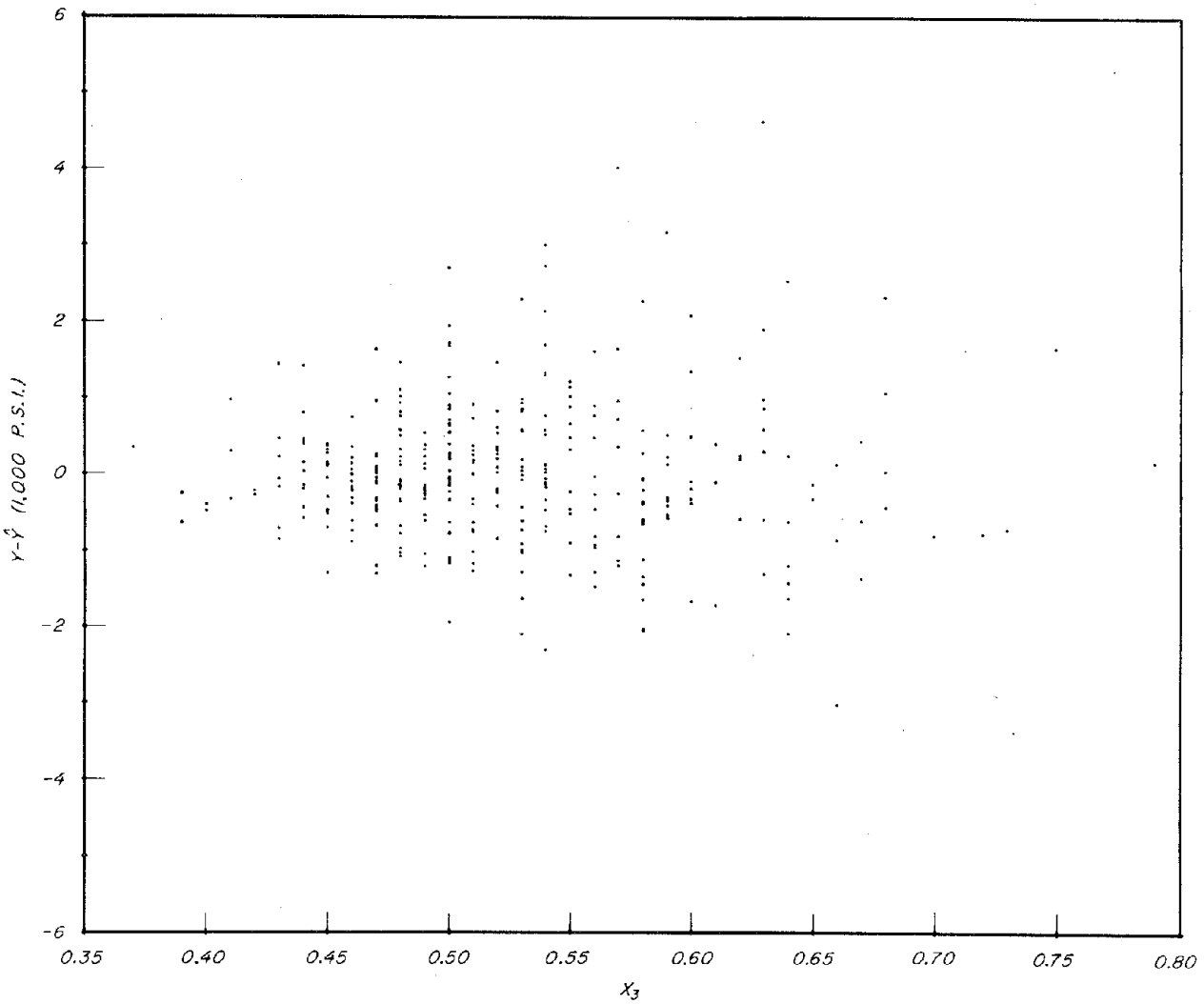

Figure 4.--Relationship of residuals of tensile strength $Y - \hat{Y}$ from model 42ES to specific gravity X_3.

M 139 189

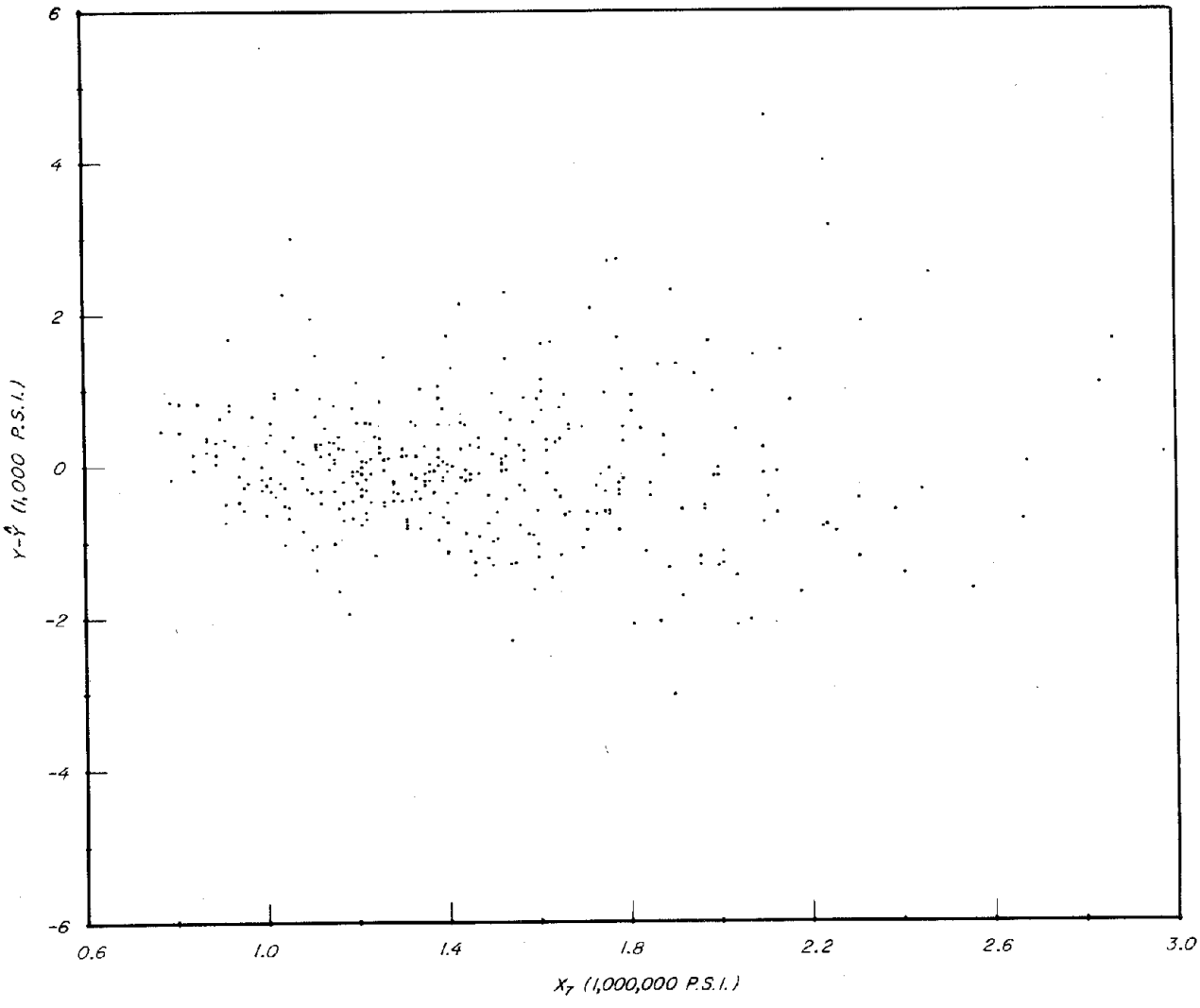

Figure 5.--Relationship of residuals of tensile strength $Y - \hat{Y}$ from model 42ES to short-span flexural stiffness X_7.

M 139 191

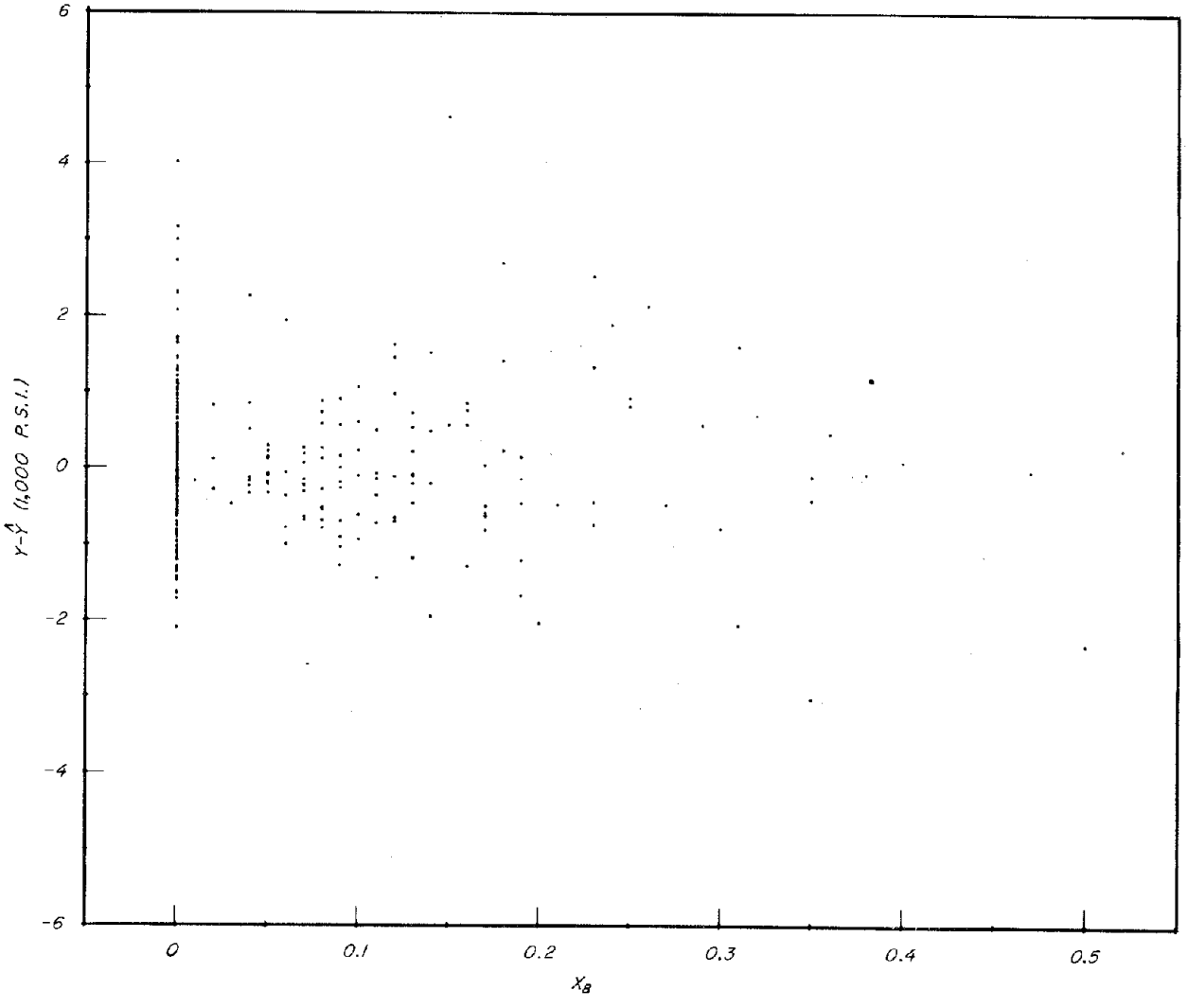

Figure 6.--Relationship of residuals of tensile strength $Y - \hat{Y}$ from model 42ES to interaction of tensile strength ratio and slope of grain X_8.

M 139 195

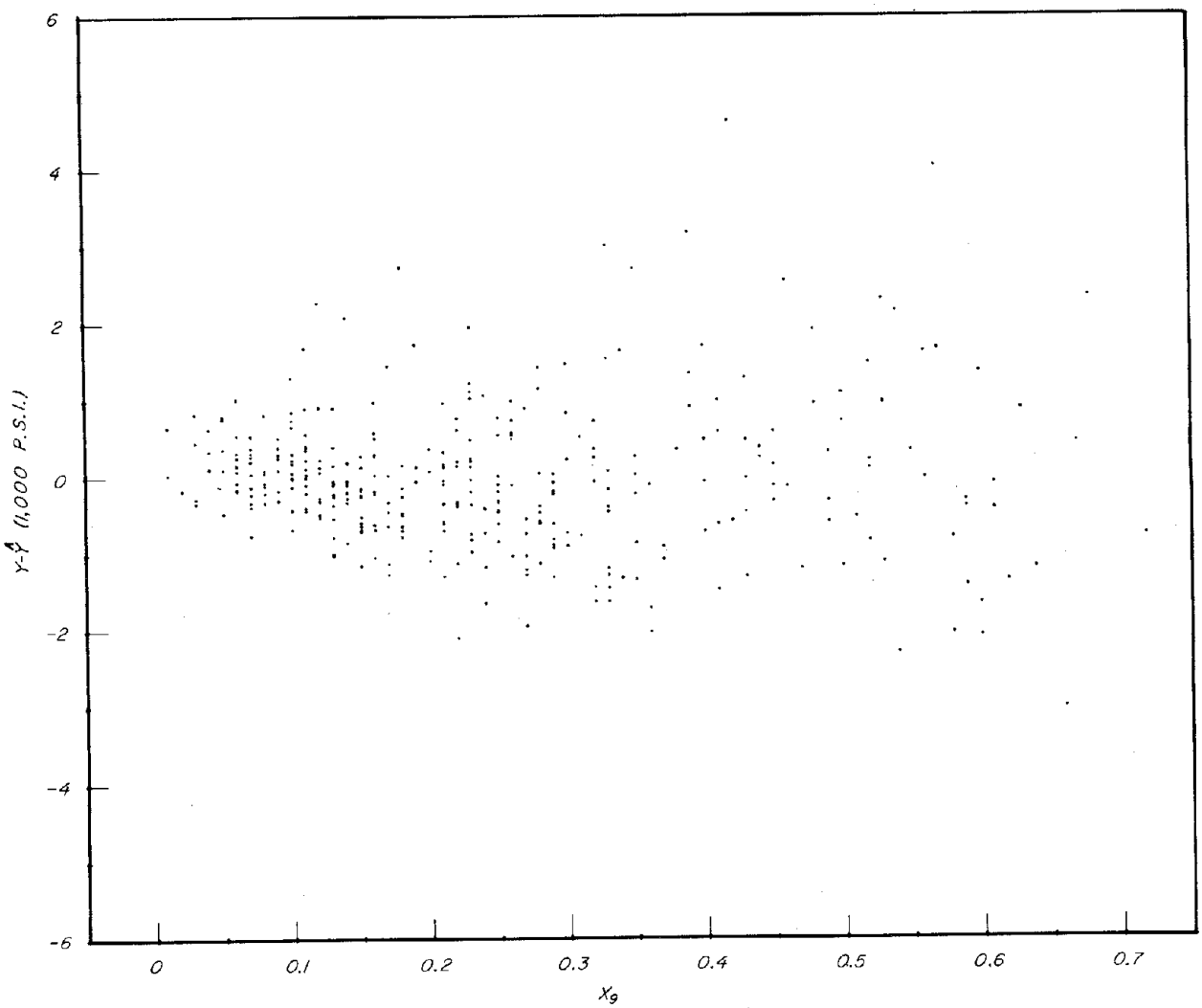

Figure 7.--Relationship of residuals of tensile strength $Y - \hat{Y}$ from model 42ES to interaction of tensile strength ratio and specific gravity X_9.

M 139 194

Table 3.--Values of 1S2 and number of falldowns2 for each of the models listed in table 1

Sub-model No.	S^2	Number of falldowns in percent of total number of specimens
41ES	285.52	2.5
[3]41EL	353.74	2.0
42ES	267.06	2.0
42EL	285.41	2.8
43ES	260.32	2.8
43EL	318.13	3.1
[4] 81ES	222.11	2.3
81EL	271.17	.5
82ES	184.73	2.7
82EL	192.45	2.7
83ES	254.39	2.1
83EL	277.54	1.6
41ES-G	260.09	1.7
[3] 41EL-G	325.52	1.7
43ES-G	239.66	3.7
43EL-G	295.33	4.2
41	331.36	4.5
42	349.21	3.4
43	367.14	2.8
[4] 81	296.85	1.1
82	223.28	2.1
83	317.40	3.7
141ES	293.85	1.7
[3] 141EL	364.59	2.0
142ES	244.24	2.8
142EL	312.06	3.4
143ES	260.32	2.8
143EL	318.13	3.1
181ES	265.51	.5
181EL	284.11	1.1
182ES	198.59	2.1
182EL	206.12	1.6
183ES	254.39	2.1
183EL	277.54	1.6
141ES-G	263.49	1.7

[1] Equation for S^2 is given in Appendix 3.

[2] Data points below Y_t (lower exclusion limit).

[3] Values based on excluding all values for $\hat{Y} < 300$ p.s.i.

[4] Values based on excluding all values for $\hat{Y} < 1{,}000$ p.s.i.

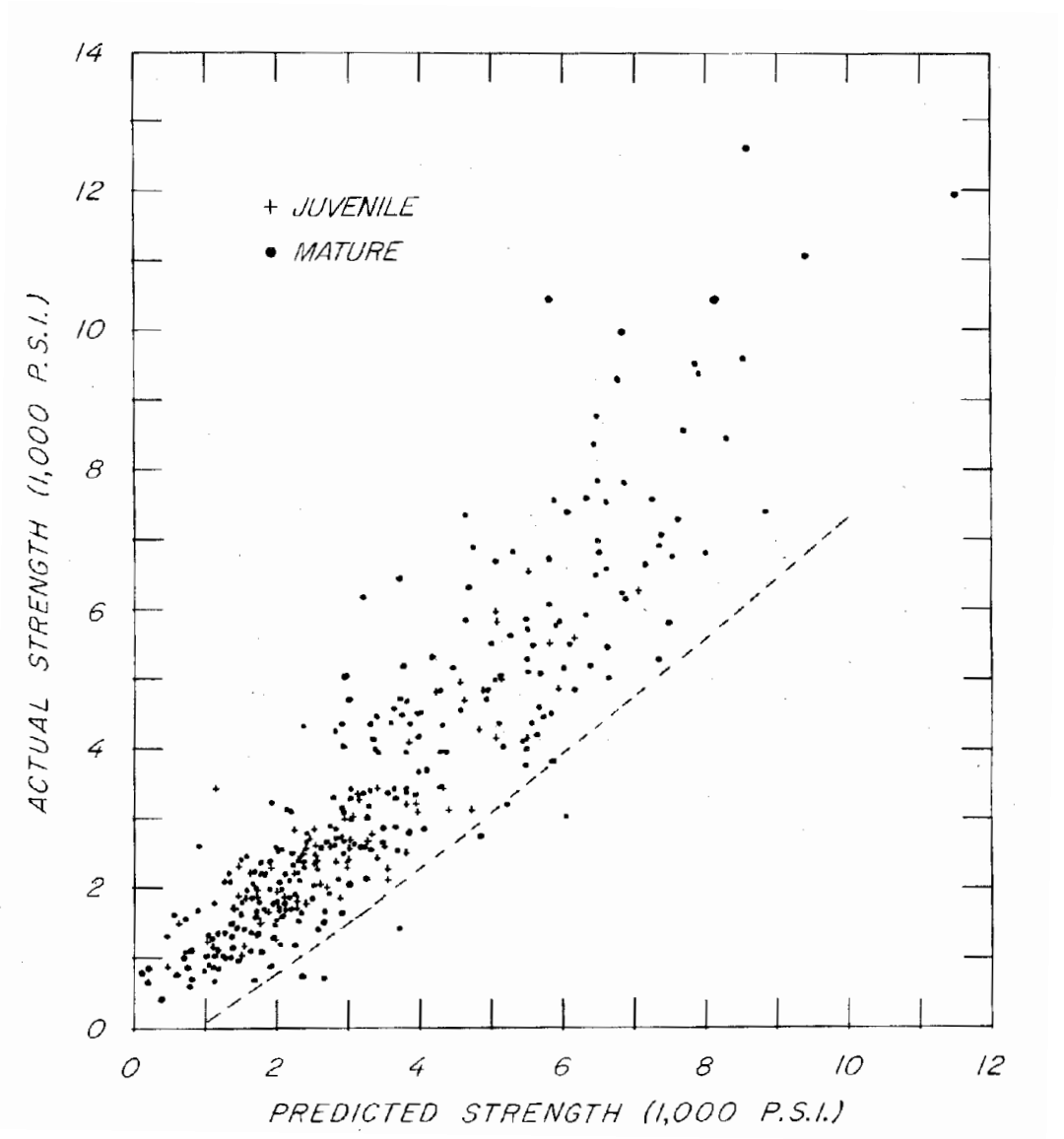

Figure 8.--Relationship of actual tensile strength of 2 by 4's to tensile strength predicted by model 42ES.

M 139 187

The exclusion limit equation for model 42ES is complicated by the number of terms. Because model 43EL is simple, it can serve as an example for using equation 3. The prediction equation for model 43EL in general terms is

$$\hat{Y} = B_0 + B_{12}X_{12}$$

Therefore,

$$Y_t = B_0 + B_{12}X_{12}$$

$$-t\sqrt{S^2\left[B_0 + B_{12}X_{12} + (B_0 + B_{12}X_{12})^2/\Sigma Y_j\right]}$$

in general terms and

$$Y_t = 835 + 3{,}300X_{12}$$

$$-1.65\sqrt{318.13\left[835 + 3{,}300X_{12} + (835 + 3{,}300X_{12})^2/1{,}217{,}400\right]}$$

in specific terms. In practice, values for X_{12} are decided by the user. Because $X_{12} = X_1 X_7$, a given value for X_{12} can be satisfied by a continuum of increasing X_1 and decreasing X_7 values or vice versa, For example, $X_1 = 0.8$ and $X_7 = 1.25$ million pounds per square inch will satisfy a chosen value for $X_{12} = 1.0$ million pounds per square inch; so would $X_1 = 1.0$ and $X_7 = 1.0$ million pounds per square inch, or $X_1 = 0.5$ and $X_7 = 2.0$ million pounds per square inch.

That the equation for the exclusion limit is only approximate is attested by the number of falldowns shown in table 3. The number of falldowns is consistently less than 5 percent. In some models (the footnoted), very low datapoints had to be excluded, because the resulting exclusion equations were extremely conservative. Even then the exclusion equations are conservative as indicated by the low number of falldowns. Actually, any data point lying very near the Y-axis, where the predicted value is very near zero, tends to inflate the value for S^2. This may be noted in the equation for S^2 in Appendix 3 where the quantity $\Sigma(Y_j^2/\hat{Y}_j)$ may approach infinity as $\hat{Y}_j$ approaches zero. It may not be physically possible for Y_j to approach that near zero because pieces that weak probably break during manufacture and are discarded.

The sample used here was basically the same as that used by Orosz (10). Some differences in the analyses, however, are listed in the following:

1) Orosz excluded fewer specimens (nineteen 2 by 4's and seven 2 by 8's).

2) Orosz limited his study of tensile strength to an analysis of the ASTM form of strength ratio (BSR) and to flexural stiffness.

3) Orosz worked with the logarithm of tensile strength rather than tensile strength directly; he considered quadratic terms as possible variables, but did not include any interaction terms because the log transformation tends to account for some interaction.

Because analyses differed, general comparisons are possible for only two models, submodels 43ES and 43EL, and the comparable models given by Orosz for 2 by 4's ((10), table 5). Each comparable model is limited to one of the measures of flexural stiffness and the same bending strength ratio. Regression coefficients are not comparable because of the different forms of tensile strength, but the R^2 values for 43ES and 43EL exceed those for the comparable Orosz models by 0.02 and 0.05, respectively. The slightly better fit of 43ES and 43EL may result from excluding a larger number of specimens from analysis.

Of primary interest, however, is the comparison of exclusion values. Orosz published exclusion values involving only BSR and ES; thus comparison is limited to submodel 43ES. Figure 9 shows the lower "5 percent" exclusion values for submodel 43ES and for the comparable Orosz model. The Orosz model predicts the more liberal lower exclusion values for ES up to about 1,000,000 p.s.i. regardless of strength ratio and for strength ratios up to about 30 percent regardless of ES. Exclusion values differ very little, however, for ES from about 1,000,000 to 1,800,000 p.s.i. at strength ratios above about 50 percent.

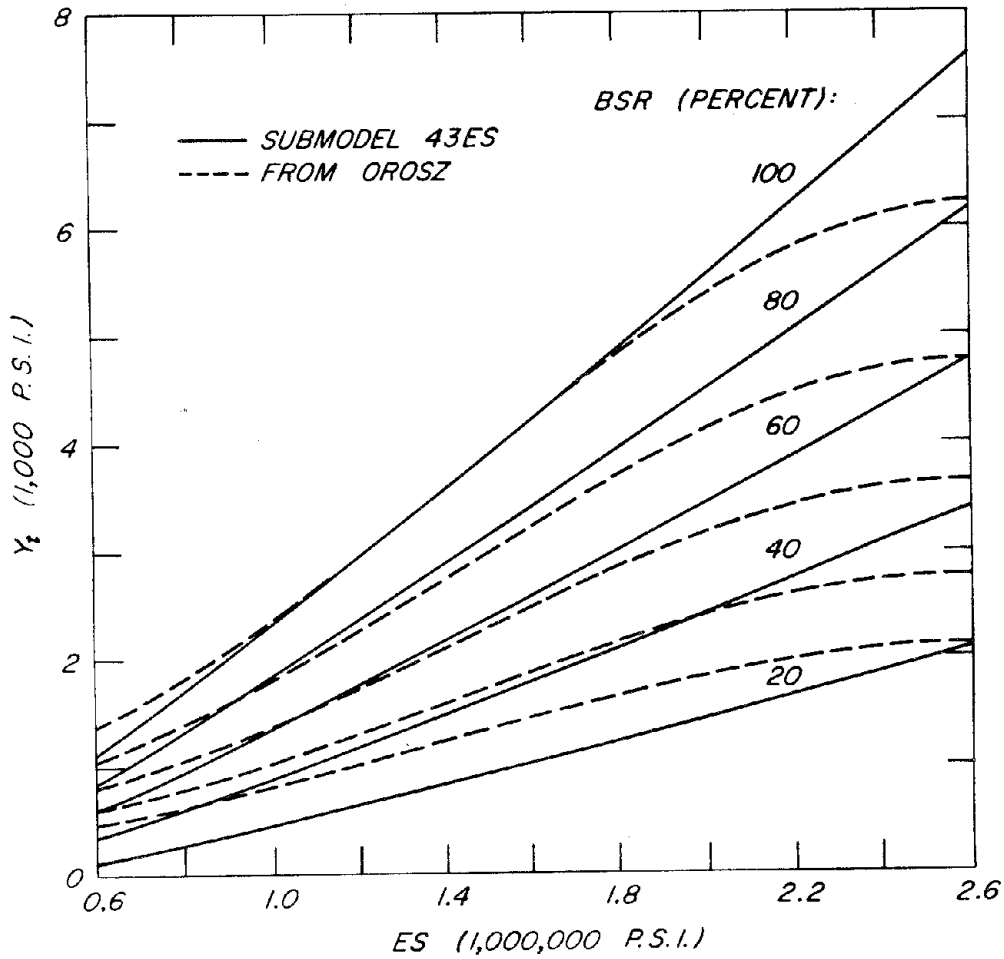

Figure 9.--Relationship of the "5 percent" lower exclusion limits for tensile strength Y_t of 2 by 4's to bending strength ratio and short-span flexural stiffness ES.

M 139 188

SUMMARY

About 72 to 83 percent of the variation in tensile strength of southern pine dimension lumber with a wide range of characteristics was accounted for by various linear combinations of strength ratio of knots, stiffness, slope of grain, and specific gravity. Strength ratio of knots and stiffness were apparently the most important because they appeared in all of the most significant linear combinations. For the most significant linear combinations, stiffness measured over a 4-foot span improved the coefficient of determination for 2 by 4's by about 0.05 compared to stiffness measured over a 15-foot span. Three different methods of estimating strength ratio of knots were investigated, but none was superior by more than 0.08 in coefficient of determination when evaluated in conjunction with other variables.

Based on a small portion of the lumber in which failure was primarily associated with cross grain rather than with knots, a stress interaction equation accounted for about 61 percent of the variation in tensile strength.

Of the other variables, checks and compression wood could not be evaluated; growth rate did not significantly affect tensile strength; and only when flexural stiffness was intentionally excluded as a variable did warp and percent latewood have a significant effect on tensile strength.

In developing stress grades, the lower 5 percent exclusion surface is needed. Development and display of an exclusion surface can be very difficult for multivariable relationships where heterogeneous variance is often encountered. In this work a 5 percent exclusion surface is approximated by use of a plot of actual values versus predicted strength values and some well-established regression techniques.

LITERATURE CITED

1. American Society for Testing and Materials.
   1964. Tentative methods for establishing structural grades of lumber. ASTM D 245-64T.

2. _____
   1970. Standard methods for establishing structural grades and related allowable properties for visually graded lumber. ASTM D 245-70.

3. Dawe, P. S.
   1964. The effect of knot size on the tensile strength of European redwood. Wood 29(11): 49-51.

4. Doyle, D. V.
   1967. Tension parallel-to-grain properties of southern pine dimension lumber. U.S. Forest Serv. Res. pap. FPL 84. Forest Prod. Lab., Madison, Wis.

5. Draper, N. R., and Smith, H.
   1966. Applied regression analysis. John Wiley and Sons, Inc., New York.

6. Kunesh, R. H., and Johnson, J. W.
   1972. Effect of single knots on tensile strength of 2 by 8 inch dimension Douglas-fir lumber. Forest Prod. J. 22(1): 32-36.

7. Littleford, T. W.
   1967. Tensile strength and modulus of elasticity of machine graded 2 x 6 Douglas-fir. Forest Prod. Lab. Inform. Rep. VP-X-12, Dep. Forestry and Rural Dev., Vancouver, Canada.

8. Nemeth, L. J.
   1965. Correlation between tensile strength and modulus of elasticity for dimension lumber. Presented 2nd Symp. on Nondestructive Testing of Wood Proc., Spokane, Wash., April 22-24.

9. Norris, C. B.
   1962. Strength of orthotropic materials subjected to combined stresses. U.S. Forest Prod, Lab. Rep. 1816.

10. Orosz, I.
    1969. Modulus of elasticity and bending-strength ratio as indicators of tensile strength of lumber. J. of Materials 4(4): 842-864.

11. Siimes, F. E.
    1963. Tension strength of Finnish saw timber. Wood Tech. Lab., State Inst. for Tech. Res., Helsinki. Presented 5th Conf. on Wood Tech., Madison, Wis.

12. Schniewind, A. P., and Lyon, D. E.
    1971. Tensile strength of redwood dimension lumber. 11. Prediction of strength values. Forest Prod. J. 21(8): 45-55.

13. Zehrt, W. H.
    1962. Preliminary study of the factors affecting tensile strength of structural lumber. U.S. Forest Prod. Lab. Rep. No. 2251.

APPENDIX 1

COORDINATE METHOD OF MEASURING KNOTS

ASTM D 245[1,2] provides methods for determining size and position of knot in stress-graded lumber. A knot measured by these methods is assumed equivalent to a hypothetical round knot or void passing through the lumber perpendicular to a surface.

Actually, knots in lumber are very seldom round or perpendicular to a surface. If a knot could be seen through a lumber end, it would appear as a projection on a cross section normal to the long axis of a piece. For knots not overgrown, a projected view (projected knot area) might look like one of the shapes shown in the following illustration in which each number represents a suggested nomenclature for the shape of the knot. (The number of faces on which a knot appears is indicated

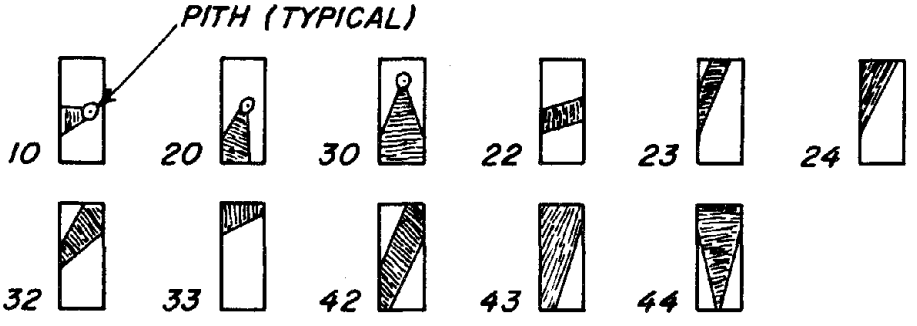

by the first digit of each number; the second digit is arbitrary.) Of course, a particular shape might appear on a cross section in many forms; three possible forms are shown below for shape 22:

The knots may also bulge or curve within the cross section; they do not necessarily vary linearly across the section as shown. However, in this study, knots were assumed to vary linearly.

In the coordinate method of measuring knots, no attempt is made to establish a hypothetical knot size. Rather, only the extreme coordinates of the projected knot area in a perpendicular cross section are measured. An example of the method is shown in the following diagram:

[1] American Society for Testing and Materials. Tentative methods for establishing structural grades of lumber. ASM D 245-64T. 1964.

[2] American Society for Testing and Materials. Standard methods for establishing structural grades and related allowable properties for visually graded lumber. ASTM D 245-70. 1970.

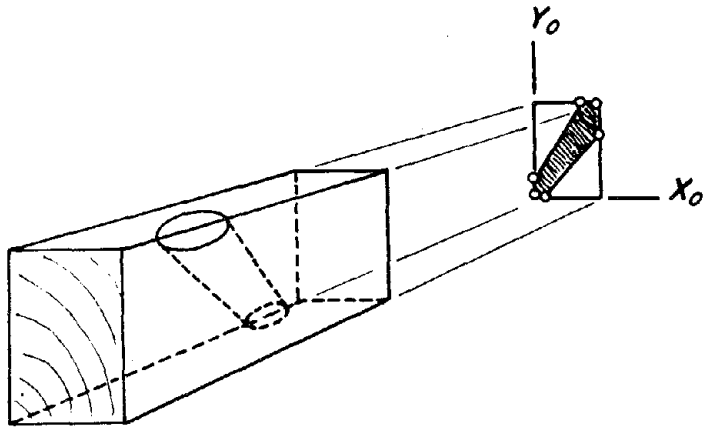

The extremities of the knot at which coordinates are measured relative to the X_0 and Y_0 axes are indicated by the six small circles. If a knot is overgrown, the coordinates of the internal extremities of the knot area must be estimated. If the pith of the tree is present, its coordinate must also be estimated to use with knot shapes 10, 20, and 30.

In this study internal coordinates for overgrown knots or pith were measured or estimated at failure cross sections after test. Also, for this study knot area coordinates reflected any sapwood portion of a branch in addition to the usual heartwood (dark-colored portion of knot).

APPENDIX 2

TENSILE STRENGTH RATIO FOR LUMBER WITH KNOTS

A tensile strength ratio (TSR) for lumber can be defined as the ratio of the tensile load carrying capacity of a piece with knots to that if the piece were knot-free. For a piece with a single knot like that shown below, loaded in tension, the internal force acts normal to the cross

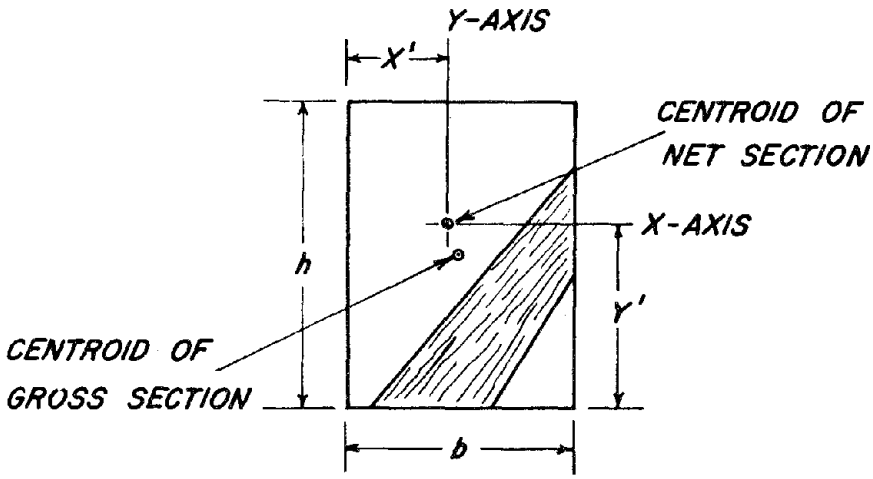

section with the knot, The force is assumed to act through the intersection of the X and Y axes that locate the centroid of the net section and by which the knot is treated as a void. This force and the external tensile force, F, applied at the end of the piece and assumed to act at the centroid of the gross cross section cause an internal bending moment at the section with the knot. This moment, which will give rise to unsymmetric bending, can be resolved into the components Mx and My that act in the planes of the coordinate axes.

$$M_x = F\left(\frac{h}{2} - Y'\right)$$
$$M_y = F\left(\frac{b}{2} - X'\right) \qquad (1)$$

The moments will cause the member to bend in such a manner that the centroids of net and gross cross sections will move closer together, which in turn will change the magnitude of the moments. This effect will be ignored; that is, it will be assumed that the long axis of the piece does not bend,

By definition, the tensile strength ratio, TSR, is related to the applied breaking load, F, by

$$TSR = \frac{F}{F'} \qquad (2)$$

where F' is the load a clear straight-grained member of the same size would carry at failure.

Assuming that the clear wood in the piece is homogeneous and has the same tensile strength σ_T everywhere,

$$F' = \sigma_T A' \qquad (3)$$

where A' = bh.

It is not so easy to express F in terms of tensile strength because of the contribution of the internal moment. The stress $\sigma_{y,x}$ at any point in the cross section with the knot is a combined stress. It can be shown to be[1]

$$\sigma_{y,x} = \frac{F}{A} + \left(\frac{M_y I_x - M_x P_{xy}}{I_x I_y - P^2_{xy}}\right) x + \left(\frac{M_x I_y - M_y P_{xy}}{I_x I_y - P^2_{xy}}\right) y \qquad (4)$$

where I_x I_y , P_{xy} = the moments of inertia and the product of inertia, respectively, of the cross section measured relative to the centroidal axes X, Y of the net section; A = the area of the net section; x and y = the coordinates measured relative to the X, Y axes of the point in the net section most distant from, but on the centroid of the gross-cross-

[1] Seely, F. B., and Smith, J. O. Advanced mechanics of materials. 2nd ed., John Wiley and Sons, Inc., New York. Chap. 5. 1952.

section side of, the neutral axis. (Note: either x or y can be positive or negative depending on their positions relative to the centroidal axes.)

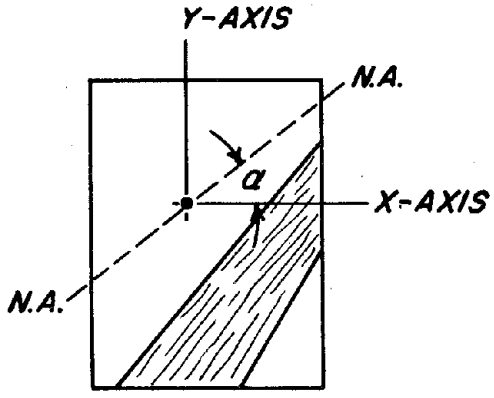

If $\tan\alpha$ is positive, α is measured clockwise from the X-axis, if negative, counterclockwise, where

$$\tan\alpha = \frac{P_{xy} - I_x\left(\frac{b - 2X'}{h - 2Y'}\right)}{P_{xy}\left(\frac{b - 2X'}{h - 2Y'}\right) - I_y}$$

When F is increased until $\sigma_{x,y}$ reaches σ_T, failure is assumed to impend. Then, by substitution of equations 1, 3, and 4 into equation 2

$$TSR = \frac{1}{A'\left\{\frac{1}{A} + \left[\frac{\left(\frac{b}{2} - X'\right)I_x - \left(\frac{h}{2} - Y'\right)P_{xy}}{I_xI_y - P^2_{xy}}\right]x + \left[\frac{\left(\frac{h}{2} - Y'\right)I_y - \left(\frac{b}{2} - X'\right)P_{xy}}{I_xI_y - P^2_{xy}}\right]y\right\}} \quad (5)$$

When the axes of symmetry of knot and cross section coincide, as shown in the following, X' = b/2, Y' = h/2, and TSR = A/A'. This is the same as TAR discus sed in the body of this report, since A/A' = (1 - KAR).

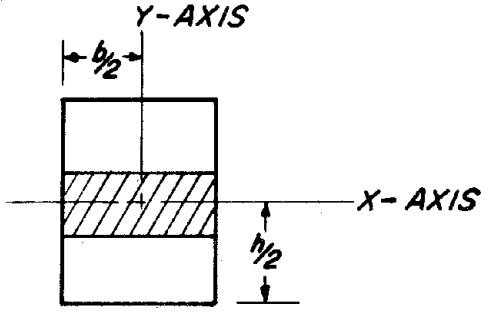

KAR is the ratio of knot area to gross cross-sectional area.

If the knot shown is located at the edge of the cross section, equation 5 reduces to

$$TSR = \left(\frac{A}{A'}\right)^2 \left(\frac{1}{3 - \frac{2A}{A'}}\right)$$

$(A/A')^2$ may be recognized as the fractional residual section modulus, which is the bending strength ratio (BSR) for the section. Thus, TSR reduces further to

$$TSR = \frac{BSR}{1 + 2KAR}$$

the formula given by Orosz (10).

The preceding examples pertain to lumber with a single knot. Most pieces of lumber contain several knots different in size and location; sometimes several are at any one cross section. Equation 5 may be applied to each cross section, taking into account all knots at the cross section, to locate the lowest value for a piece. In this study the lowest value was not always determined since the formula was only applied to the failure section. The failure section was used because other characteristics at or near the failure section were simultaneously analyzed with TSR in evaluating tensile strength. Use of the failure section is technically correct when tensile strength is related to two or more characteristics of the section, but may be conservative, particularly if TSR is the only characteristic used.

The following shows how TSR's may be computed and how TSR, TAR, and BSR compare for one example. A single knot appears as a perfect circle on the wide faces with a diameter of 1 inch, and has the projected area on a 2- by 4-inch cross section as shown.

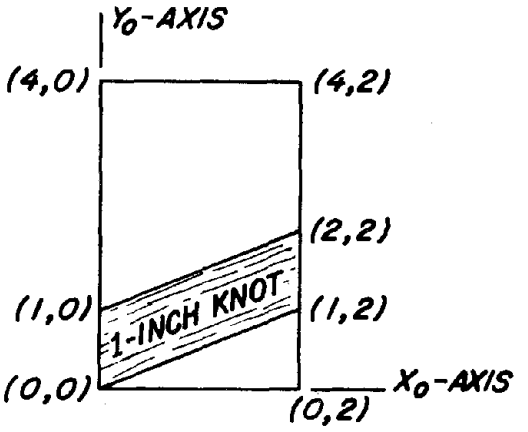

The net section is broken into a set of right triangles.

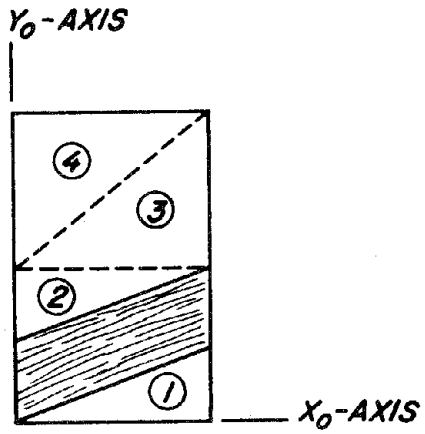

Each right triangle has moments of inertia andproduct of inertia that can be translated to the $\underline{X_0}$ and $\underline{Y_0}$ axes. The summation of those inertia properties related to the $\underline{X_0}$ and $\underline{Y_0}$ axes can then be translated to parallel axes originating at the centroid of the net section. The moments of inertia of the triangles about the $\underline{X_0}$ axis are given by

$$I_{X_0} = \Sigma\left(\frac{A_i h_i^2}{18}\right) + \Sigma\left(A_i \bar{y}_i^2\right)$$

and about the $\underline{Y_0}$ by

$$I_{Y_0} = \Sigma\left(\frac{A_i b_i^2}{18}\right) + \Sigma\left(A_i \bar{x}_i^2\right)$$

where A_i = the area of the ith triangle

h_i = its height

b_i = its breadth

$\bar{y}_i$ = the perpendicular distance from the X_0 axis to the centroid of the triangle

$\bar{x}_i$ = the perpendicular distance from the Y_0 axis to the centroid of the triangle

The product of inertia relative to the X_0 and Y_0 axes is given by

$$P_{X_0Y_0} = \Sigma\left(\pm\frac{A_i^2}{18}\right) + \Sigma(A_i \bar{x}_i \bar{y}_i)$$

When the hypotenuse of the ith triangle has a positive slope, the plus sign is used; when a negative slope, the minus sign. The moments and product of inertia about the centroidal axes of the next section parallel

to $\underline{X_0}$ and $\underline{Y_0}$ are given by

$$I_X = I_{X_0} - A\overline{Y}^2$$

$$I_Y = I_{Y_0} - A\overline{X}^2$$

$$P_{XY} = P_{X_0Y_0} - A\overline{XY}$$

The centroid of the net section is located at

$$X' = \frac{\Sigma(A_i\overline{x}_i)}{\Sigma A_i} \qquad Y' = \frac{\Sigma(A_i\overline{y}_i)}{\Sigma A_i}$$

Triangle	A_i	A_i^2	$\overline{y}_i$	$\overline{x}_i$	$A_ih_i^2$	$A_ib_i^2$	$A_i\overline{y}_i^2$	$A_i\overline{x}_i^2$	$A_i\overline{x}_i\overline{y}_i$
1	1	+1	1/3	4/3	1	4	1/9	16/9	4/9
2	1	+1	5/3	2/3	1	4	25/9	4/9	10/9
3	2	+4	8/3	4/3	8	8	128/9	32/9	64/9
4	2	+4	10/3	2/3	8	8	200/9	8/9	40/9
Σ	6	+10			18	24	354/9	60/9	118/9

$$I_{X_0} = \frac{1}{18}(18) + 354/9 = 363/9$$

$$I_{Y_0} = \frac{1}{18}(24) + 60/9 = 72/9$$

$$P_{X_0Y_0} = \frac{1}{18}(10) + 118/9 = 123/9$$

$$X' = \frac{1}{6}\left[\frac{4}{3} + \frac{2}{3} + 2\left(\frac{4}{3}\right) + 2\left(\frac{2}{3}\right)\right] = 1$$

$$Y' = \frac{1}{6}\left[\frac{1}{3} + \frac{5}{3} + 2\left(\frac{8}{3}\right) + 2\left(\frac{10}{3}\right)\right] = \frac{7}{3}$$

$$I_X = \frac{363}{9} - 6\left(\frac{7}{3}\right)^2 = \frac{69}{9}$$

$$I_Y = \frac{72}{9} - 6(1)^2 = \frac{18}{9}$$

$$P_{XY} = \frac{123}{9} - 6\left(\frac{7}{3}\right)(1) = -\frac{3}{9}$$

$$\tan\alpha = \frac{-\frac{3}{9} - \frac{69}{9}\left(\frac{2-2}{4-2\left(\frac{7}{3}\right)}\right)}{-\frac{3}{9}(0) - \frac{18}{9}} = \frac{1}{6}$$

$\therefore \alpha = 9.6°$

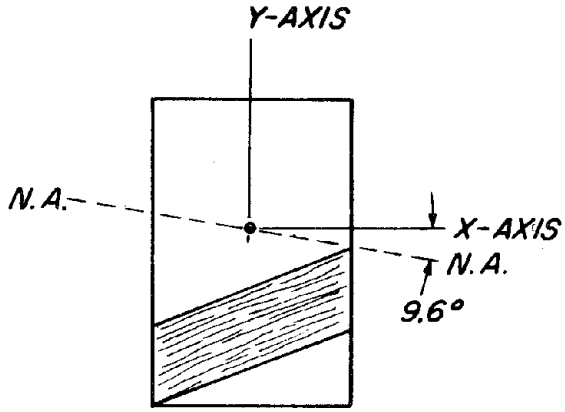

$$TSR = \frac{1}{8\left[\frac{1}{6} + \frac{\left\{0 - \left(\frac{4}{2} - \frac{7}{3}\right)\left(-\frac{3}{9}\right)\right\}(-1) + \left\{\left(\frac{4}{2} - \frac{7}{3}\right)\left(\frac{18}{9}\right) - 0\right\}\left(-\frac{7}{3}\right)}{\frac{69}{9}\left(\frac{18}{9}\right) - \left(-\frac{3}{9}\right)^2}\right]}$$

$= 0.45$

As contrast, TAR = 6/8 = 0.75 and BSR = 0.61 from ASTM D 245. Although TSR yields the lowest value of strength ratio for the case presented, BSR may be lowest in some other cases, but TAR will never be lowest because it will always equal or exceed TSR.

APPENDIX 3

LOWER EXCLUSION LIMIT FROM PREDICTED VALUE

For the model $\hat{Y} = bX$, where Y is normally distributed and the variance of Y is proportional to X, Natrella[1] gives

$$bX^* \pm t\sqrt{X^* S^2 + X^{*2} S_b^{\,2}}$$

as the confidence interval for a single future observation of Y, where X^* = the independent variable associated with the observation, Y, b = the least-squares regression coefficient of X, t = the Student t value associated with the selected degree of confidence,

$$S^2 = \frac{1}{(n-1)}\left[\Sigma\left(\frac{Y_j^{\,2}}{X_j}\right) - \left(\frac{(\Sigma Y_j)^2}{\Sigma X_j}\right)\right]$$

$$S_b^{\,2} = \frac{S^2}{\Sigma X_j}$$

[1] Natrella, M. G. Experimental statistics. National Bureau of Standards Handbook 91. U.S. Government Printing Office, Washington, D.C. 20402. 1963.

n = number of sample observations of Y_j, X_j.

If the actual strength Y is considered normally distributed with respect to the predicted values $\hat{Y}$, with variance proportional to $\hat{Y}$ (see text, fig. 8), then $\hat{Y}$ takes on the role of X in the preceding formulas. Also, Y takes on the role of $\hat{Y}$. Then specific predicted values $\hat{Y}^*$ can be substituted for X^* and it follows that

$$b = 1$$

$$\Sigma X_j = \Sigma \hat{Y}_j = \Sigma Y_j$$

$$S^2 = \frac{1}{(n-1)} \left[\Sigma \left(\frac{Y_j^2}{\hat{Y}_j} \right) - \frac{(\Sigma Y_j)^2}{\Sigma Y_j} \right]$$

and the lower exclusion limit (Y_t) is

$$Y_t = \hat{Y}^* - t \sqrt{S^2 \left[\hat{Y}^* + \frac{(Y^*)^2}{\Sigma Y_j} \right]}$$

By definition,

$$\hat{Y}_j = (B_o + \Sigma B_i X_i)_j$$

where $B_i X_i$ = the product of the ith X variable for the jth test specimen and its least square regression coefficient. (B_0 + S $B_i X_i$) may be recognized as the general form for a prediction equation. The Y's are really nothing more than the least-squares estimates of the sample Y's.

Therefore, the equation for the exclusion limit used in the text (equation 3) is based on the following assumptions:

1) The set of test specimens used to establish the prediction equation represents the population.

2) The tensile strength predicted for the jth specimen in the set of test specimens is the same as the least-squares estimate of tensile strength for that specimen.

3) The predicted tensile strength is an independent variable relative to the actual tensile strength.

4) Actual tensile strength is normally distributed with variance proportional to the predicted tensile strength.

The * has been dropped from the equation in the text for simplicity.

NOMENCLATURE

BSR =bending strength ratio
EL = long-span (15 feet) flexural stiffness
ES = short-span (4 feet) flexural stiffness
GL = full-length torsional stiffness
KAR = knot area ratio (fractional area of lumber cross section occupied by the projected area of a single knot)
TAR =tensile area ratio (residual area stressed in tension)
TSR =tensile strength ratio