*Chapter 6*

# *WORKING INSIDE*


Page

Interior wall framing ..... 166

Plumbing, heating, and electrical installation ..... 166

Insulation and vapor retarders ..... 167

Installing insulation ( *170* ), Vapor retarders ( *173* ).

Interior wall and ceiling finish ..... 175

Gypsum board ( *175* ), Paneling ( *176* ), Wainscot ( *179* ).

Wood flooring ..... 180

Preparation of wood joists to receive flooring (*181* ), Preparation of a concrete slab to receive flooring ( *181* ), Laying and fastening strip flooring ( *183* ), Laying plank flooring ( *184* ), Laying parquet flooring ( *184* ).

Other floor coverings ..... 187

Carpet ( *187* ), Sheet vinyl and resilient tile ( *187* ), Ceramic tile ( *187* ).

Interior doors ..... 187

# Working Inside

Sections in this chapter discuss the work to be done inside the house after the shell is complete.

## Interior Wall Framing

Some interior partitions, called load-bearing partitions, support the joists of the roof or second floor. The others are called non-load-bearing partitions.

Interior load-bearing partitions are framed in the same manner and with the same types of studs, plates, and headers as exterior load-bearing walls.

Wood stud framing is commonly used for non-load-bearing partitions because of its cost-effectiveness, simplicity, and efficiency. It requires no special fastening and can be finished with a variety of easily available materials.

Most building codes accept 2- by 3-inch studs spaced 24 inches on center with single top and bottom plates for non-load-bearing partitions. Alternatives include 2- by 3-inch studs spaced 16 inches on center, or 2- by 4-inch studs spaced either 16 inches or 24 inches on center. These methods require more material.

It is not necessary to coordinate the placement of non-load-bearing partitions with either ceiling or floor framing members. Partitions may be located either parallel or perpendicular to such members. When located perpendicularly the partitions may be anchored by nailing through the top and bottom plates directly into the ceiling and floor framing as shown in figure 151A.

Partitions running parallel to ceiling or floor framing can be located between the framing members. In such instances top anchoring can be accomplished by installing precut 2- by 3-inch or 2- by 4-inch blocks between the overhead joists or trusses (fig. 151B). These blocks should be spaced no more than 24 inches apart to provide adequate backup for ceiling finish. Nails should be driven through the block into the top plate of the partition.

Non-load-bearing partitions running parallel to and between floor framing members are adequately supported by $^5/_8$-inch or ¾-inch plywood subflooring. They may be anchored by nailing directly through the bottom plate into the plywood flooring.

Interior partitions can be attached directly to studs in intersecting walls at the point where the walls meet. If the juncture occurs between the studs of the intersecting wall, a 2- by 3-inch or 2- by 4-inch block should be installed at midheight between the studs (fig. 152). The end stud of the interior partition can be anchored to this block by nailing directly through the stud into the block.

When two interior partitions meet to form a comer, they can be joined and anchored by nailing the end studs of the partitions together (fig. 152).

Studs and plates used in framing partitions form the backup structure to which interior wall finish is attached. Additional backup is required at comers and intersections.

Supplementary backup for standard gypsum wallboard or drywall (fig. 153) can consist of cleats of $^3/_8$-inch plywood, or metal backup clips spaced up to 24 inches apart. Strips of 1- by 3-inch or 1- by 4-inch lumber 36 to 48 inches long can also be used. The gypsum wallboard is not fastened to these clips or wood backers. The drywall sheet supported by the backers should be installed first so that the adjacent sheet wedges it into place. This technique provides the nonrigid drywall joint recommended to minimize cracking.

Similar methods are used to provide backup for ceiling gypsum wallboard at the top of partitions. Such backup should not be necessary for partitions running parallel to overhead members if blocking has been installed 24 inches on center.

Backup for other types of interior finish such as wood paneling or plaster-base lath may require other methods or materials. Instructions provided by the manufacturer of the interior finish material should be followed.

Installation of drain, waste, or vent plumbing within interior partitions can require special framing. Figure 154A shows an interior partition that has a 2- by 6-inch or 2- by 8-inch top and bottom plate to accommodate large-diameter pipes. The arrangement of the 2- by 4-inch studs is designed to accommodate the plumbing laterals. It is also possible to use 2- by 4-inch framing materials with pipe diameters up to 3 inches. However, it is necessary to reinforce the top plates penetrated by these pipes by applying a double scab (fig. 154B). The scabs should be well nailed on each side of the pipe and should extend over two studs. Small angle irons can also be used.

## Plumbing, Heating, and Electrical Installation

Installation of utilities must take place while the wall cavities are open and accessible. This is commonly called

**Figure 151** – *Partition anchoring:*

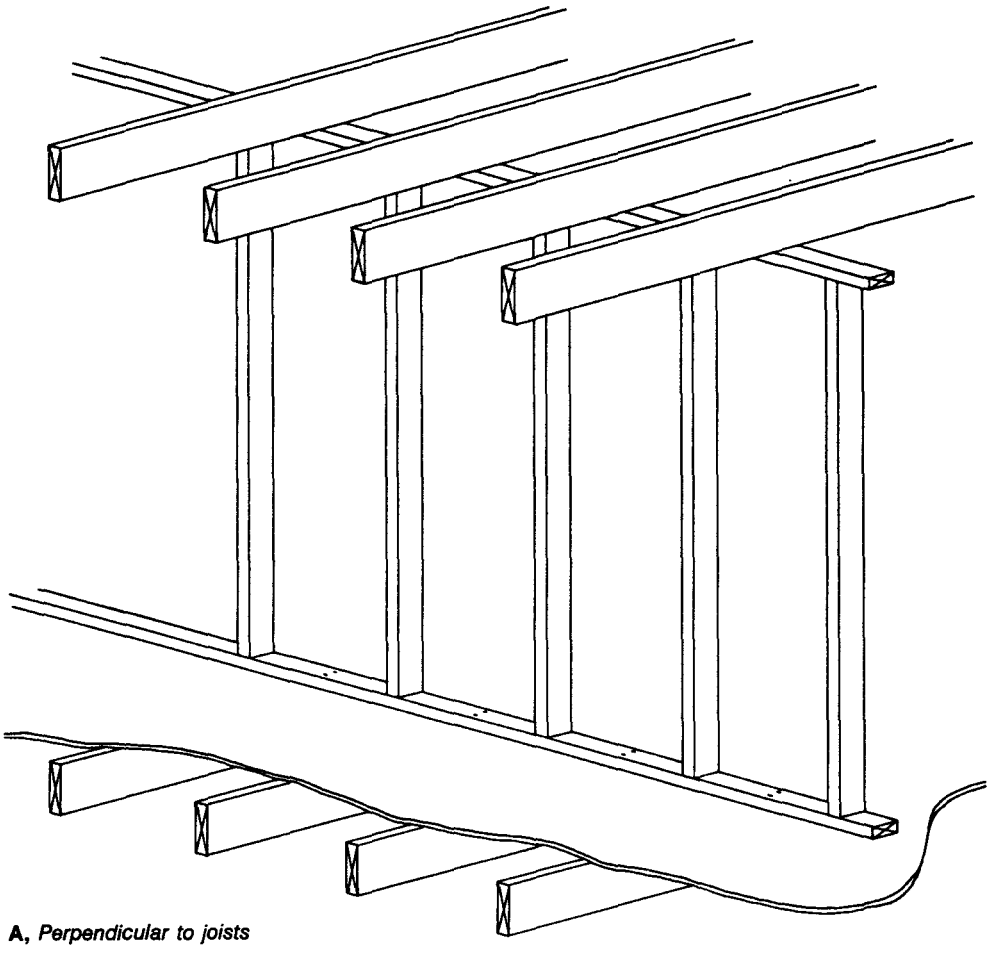

**A,** *Perpendicular to joists*

"roughing in" the plumbing lines, heating ducts, and electrical wiring that will eventually be concealed in the walls. Because of this concealment, inspection by a code authority is usually required for the roughed-in utilities while wall cavities are still visible. Wiring for other services is not mandatory, but is much easier to accomplish while the walls are open. These items include thermostat, telephone, doorbell, intercom, and cable TV. To be most effective all of this requires advance planning of room usage and furniture placement. At least one telephone jack in each room may be advisable. Where cable TV is available, TV jacks should be placed in several locations.

### Insulation and Vapor Retarders

After utilities are roughed in, insulation should be installed. The most widely used home insulation is made of mineral fibers and is called rock wool or fiberglass. It is composed of very fine inorganic fibers made from rock, slag, or glass, with other materials added to enhance service properties. Available forms include flexible batts and blankets (with and without facings), semi-rigid and rigid boards (with and without facings), and a loose form for blowing or pouring.

Batt and blanket insulation usually has a kraft paper vapor-retarder facing, with stapling flanges. Sometimes an enclosure or breather paper that is not a vapor retarder is used on the back side. Batts and blankets are also available with aluminum foil facings, including stapling flanges, and in an unfaced form held in place by pressure.

Mineral wool board insulation can be used on the inside face of crawl space walls. Mineral wool blankets and boards are also available for use as duct insulation. (Building blankets should not be used for this purpose.) Preformed mineral wool pipe insulation is also available through industrial insulation contractors for both hot and cold water piping.

Among other types of insulation used in residential construction, foamed plastic insulation boards or sheets are sometimes used as exterior wall sheathing, foundation

**Figure 151** – *Partition anchoring (continued):*

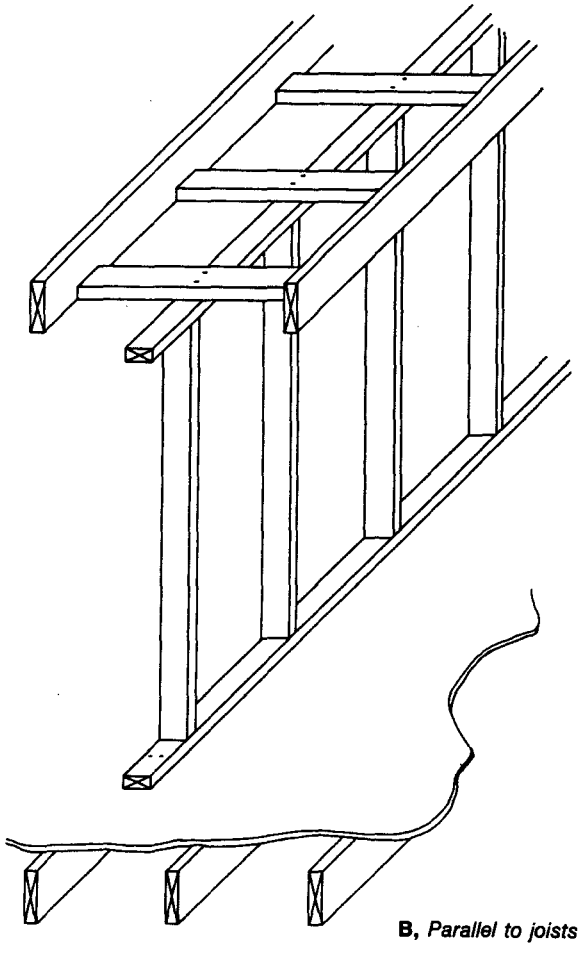


insulation, and quite commonly as perimeter edge insulation for slab-on-grade construction. Cellulose fiber insulation is used primarily in ceilings and in walls of existing homes. It should be pneumatically installed, preferably by an insulation contractor. Multiple-layer aluminum foil insulation is sometimes used between furring strips on masonry wall construction. It is fragile and must be installed with great care if it is to be effective. Whatever the insulating material, once it is installed, it becomes a permanent part of the house.

Combustible vapor-retarder facings on insulation should not be left exposed but should be covered with finish materials. Breather paper is combustible and, when exposed in accessible space, should be either covered or stripped off after the batts are in place.

Effective locations for installing insulation are the following:

1. EXTERIOR WALLS. Sections sometimes overlooked are the wall between living space and an unheated garage or storage room, dormer walls, and the portion of the wall above the ceiling of an adjacent section of a split-level house. Insulation should be stuffed into the narrow spaces around window and door openings between jambs and framing.
2. CEILINGS BENEATH COLD SPACES AND DORMER CEILING. The attic access panel can be insulated by stapling the edges of a piece of blanket insulation to its top. The use of adhesive-backed foam tape on the bottom side around the edge of the attic access panel is a convenient method of weatherstripping this opening.

**Figure 152** – *Anchoring partition intersections*

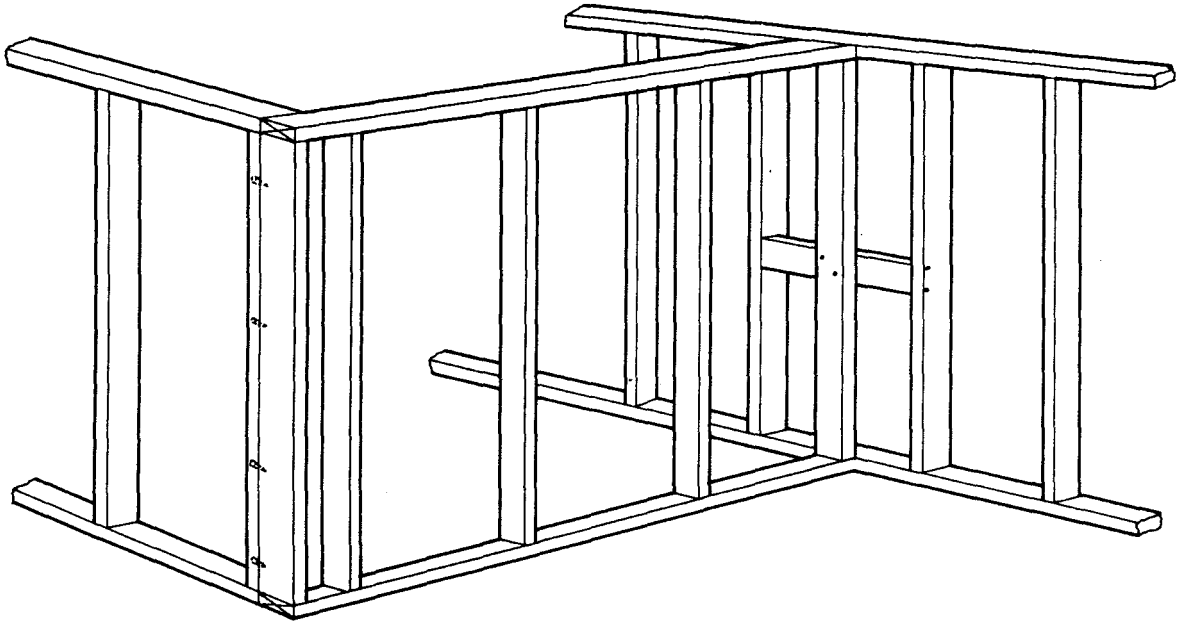

**Figure 153 –** Backup for wall finish

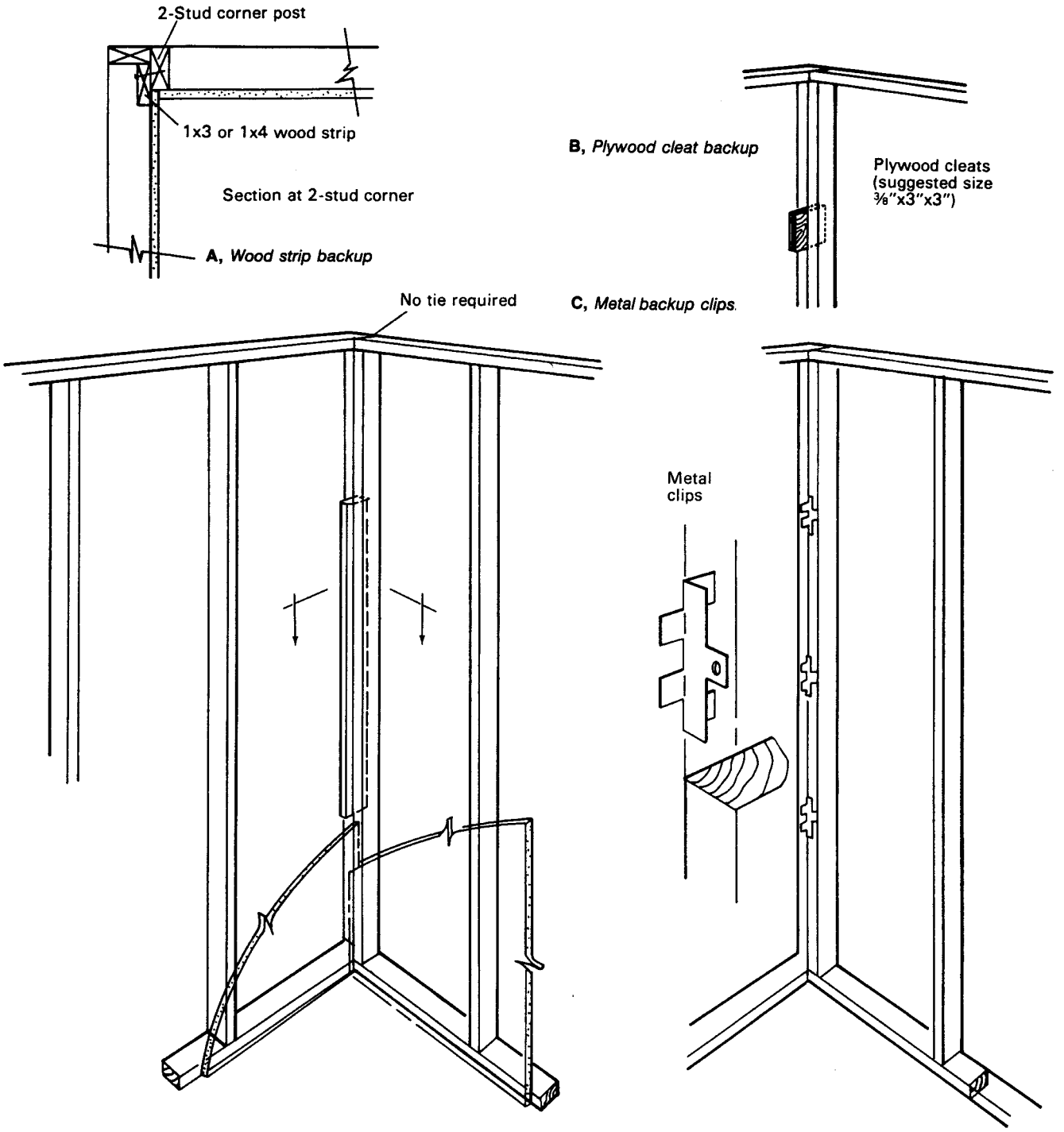


3. KNEE WALLS WHEN ATTIC SPACE IS FINISHED AS LIVING SPACE.
4. BETWEEN COLLAR BEAMS AND RAFTERS ABOVE ATTIC SPACE THAT IS FINISHED AS LIVING SPACE, leaving open space above for ventilation.
5. AROUND THE PERIMETER OF A SLAB-ON-GRADE WHEN REQUIRED.
6. FLOORS ABOVE VENTED CRAWL SPACES. When a crawl space is used as a plenum, insulation should be applied to crawl space walls instead of to the floor above.

**Figure 154 –** *Plumbing inside of partitions:*

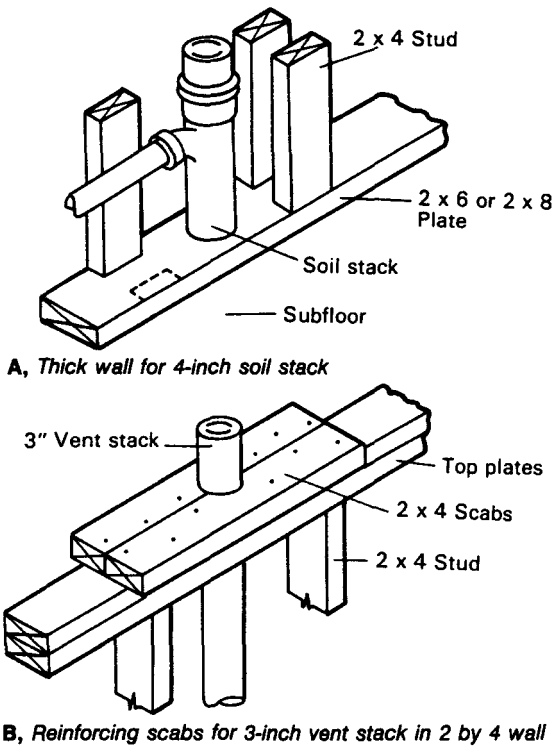


**A,** *Thick wall for 4-inch soil stack*

**B,** *Reinforcing scabs for 3-inch vent stack in 2 by 4 wall*

7. FLOORS OF HABITABLE ROOMS OVER AN UNHEATED OR AN OPEN SPACE (e.g., over a garage or a porch; under the cantilevered portion of a floor).
8. BASEMENT WALLS, especially when below-grade space is finished for living purposes. Sill sealer (insulation) between the sill and foundation provides an effective wind infiltration barrier.
9. ON THE INSIDE OF BAND OR HEADER JOISTS.
10. IN AN ANNULAR SPACE AROUND PIPES AND WIRES PENETRATING TOP PLATE FRAMING to prevent cold attic air from streaming down into interior and exterior wall cavities. If the spaces are small, it is easier to caulk them than to stuff them with insulation.

### *Installing insulation*

Proper installation of insulation is essential for good performance. Quality control of the installation is necessary to ensure that the expected performance is delivered. Insulation installation techniques vary somewhat with different constructions, but the fundamentals of proper application are the same. While these are not complicated, certain details are important.

Some general guidelines and installation tips for proper insulation installation are:

- Insulate all large and small spaces of the building walls, floors, and ceilings.
- Place insulation on the cold side (in winter) of pipes and ducts or partially tear or slit the back of the insulation batt so the pipe or wire can be surrounded with insulation without compressing the batt.
- Install insulation so the vapor-retarder side faces the interior of the home.
- Apply batt or blanket flanges snugly against the framing members.
- Butt ends of batts or blankets tightly to each other and to framing as appropriate.
- Repair major rips or tears in the vapor retarder.

**Ceilings.** There are three methods of installing blanket insulation in ceilings: (1) Stapling from below. (2) Installing unfaced blankets (no vapor retarder) fitted by pressure. (3) Laying the insulation in from above after the ceiling finish material is in place.

Staple flanges to the ceiling joists when installing ceiling insulation from below. Extend the insulation entirely across the top wall plate, keeping the blanket as close to the plate as possible. If necessary, stuff the gap between the blanket and plate with loose insulation. Where eave vents exist, the insulation should not block the movement of air from the eaves into the attic.

Wedge unfaced blankets between ceiling joists, fitting them by pressure. Allow insulation to overlap the top plate of the exterior wall, but not enough to block eave ventilation. The insulation should touch the top of the plate of the exterior wall, but not enough to block eave ventilation. The insulation should touch the top of the plate to avoid heat loss and wind penetration beneath the insulation.

Fit separate batt sections snugly together at the intersection of rafters and collar beams, insulating the collar beams first. If there is no continuous space for ventilation between the back of the rafter batts and the roof sheathing, apply a separate polyethylene vapor retarder, stapling it to the faces of the rafters and the beams.

Ceiling batts should be butted together snugly, with adjoining vapor retarders in the same plane. Poor fit substantially reduces the effectiveness of the vapor retarder. At ceiling joist plates over interior bearing partitions, fit separate sections of batts at framing offsets. Do not run a batt or a blanket continuously through the offset area; this practice results in poor vapor-retarder coverage and excessive heat loss and gain. Vapor retarders of all three batt sections should be in the same plane.

When insulating a sloped or cathedral ceiling, the insulation should extend over the wall plate with the vapor

retarder stapled to the plate. When the back of the insulation touches the roof sheathing, a continuous polyethylene sheet should be stapled to the faces of the rafters.

Specific guidelines for installing blanket ceiling insulation are:

- Make sure that the vapor retarder faces the side heated in winter.
- Cover as much of the top wall plate with insulation as possible, leaving at least 1 inch clear between the top of the insulation and the underside of roof sheathing when eave vents are installed.
- With no soffit vents, make sure that gable ventilation is adequate.
- With two-layer insulation, run the second layer perpendicular to the framing whenever possible, to cover thermal "short circuits" caused by framing members.
- Leave the top layer of two layers of blankets unfaced or have the vapor-retarder facing removed.
- Butt the ends of insulation pieces snugly together where they meet.
- Stuff insulation between the vapor-retarder face and the top wall plate, as necessary.
- Use enough staples to eliminate gaps between stapling flanges and the sides of ceiling framing.
- Use two separate pieces of blanket or cut the blanket or roll at the framing offsets. Do not run the insulation continuously at the offset or gaps and buckling will result at the joint.
- Where collar beams meet rafters and rafters meet knee walls, butt separate insulation pieces snugly together. If rafter insulation requires that the full rafter depth be filled, ventilation above the collar beams is a must.
- Stuff pieces of mineral wool insulation in ceiling voids such as those around vent pipes and chimneys. (Check the local code for chimney framing clearance requirement.)
- Do not cover recessed lighting fixtures with insulation. The heat generated by their operation must be dissipated to the attic.
- Take special care to ensure that dropped soffit areas above built-in cabinets are insulated. If blankets cannot be installed between the ceiling framing and separately down the exterior wall behind the soffit, they should be installed at the inside face and across the bottom face of the soffit construction, making sure that there are no gaps at the intersection of the exterior side wall insulation.
- Insulate and weatherstrip the attic access panel.

The many variable factors pertaining to blown attic insulation can cause differences in installed heat resistance (R-value). For a given manufacturer's insulation, the installed resistance depends upon thickness and weight of insulating material applied per square foot. For this reason, the current Federal specification for mineral fiber insulation requires that each bag of insulation be labeled to show the minimum thickness, the maximum net coverage, and the minimum weight required per square foot to produce specified resistance values. Most manufacturers also provide instructions on each bag for determining the number of bags required for a given attic area necessary to achieve a specific resistance value. These procedures must be followed. Do not purchase or specify the amount of blown attic insulation to be installed solely on the basis of the number of inches of thickness.

Specific guidelines for installing loose-fill attic insulation are:

- Proper coverage per bag, weight per square foot, and no less than the thickness indicated on the bag are a must if full R-value is to be achieved. Most bag labels show the minimum number of bags per 1,000 $ft^2$ for several different R-values.
- With gable roof construction, baffles or pieces of blanket insulation should be installed adjacent to the top exterior wall plates at the eaves.
- When eave ventilation is installed with low-slope hip roof constructions, blanket insulation should be installed around the entire periphery of the ceiling area, because comers of hips and ceiling periphery areas of such roofs are difficult to insulate properly by blowing.
- A separate polyethylene ceiling vapor retarder may be needed.
- Careful application is important to ensure adequate coverage at the far side of chimneys and vent pipes.
- Small spaces between framing members around chimneys or at obstructions should be hand-packed with mineral wool before the ceiling is blown.
- Do not cover recessed lighting fixtures with insulation.
- Dropped soffits and other lowered ceiling areas should be covered with plywood or similar material before blowing, or should be blown full.
- Insulate and weatherstrip the attic access panel.

**Walls.** Push blankets into stud spaces so they touch the sheathing or siding. Working from the top down, space staples about 8 inches apart, pulling flanges to fit snugly against the studs. Cut blanket ends to fit tightly against the top and bottom wall plates. As an alternative, cut the blankets slightly overlength and staple through the vapor retarder to the plates by compressing the insulation.

When pressure-fitted blankets are used without a vapor retarder, wedge them into place. Cover the inside face of wall studs with a 4-mil-thick polyethylene vapor retarder stapled to the top and bottom plates. Unroll the sheet across the entire wall area including window and door openings. Cut out openings later. Foil-backed gypsum board may be used as a vapor retarder instead of a polyethylene sheet.

Push insulation behind pipes, ducts, and electrical boxes. As an alternative, the space may be packed with loose insulation, or a piece of insulation of the proper size can be cut to fit.

Stuff small spaces between rough framing and door and window heads, jambs, and sills with pieces of insulation. Staple insulation vapor retarder paper or polyethylene to cover the spaces.

Insulate nonstandard-width stud or joist spaces by cutting the insulation and vapor retarder an inch or so wider than the space to be filed. Staple the uncut flange as usual. Pull the vapor retarder on the cut side to the other stud, compressing the insulation behind it, and staple through the vapor retarder to the stud. Unfaced blankets are cut slightly oversize and wedged into place.

Specific guidelines for installing blanket wall insulation are:

- Vapor retarders should face the side heated in winter.
- Blankets should be snugly butted to each other and at horizontal framing members. If the insulation is too short, another small piece should be cut to fill the gap. If the insulation is too long, it should not be doubled over or compressed at the framing member; rather it should be cut to fit properly.
- For non-standard-width spaces, insulation should be cut about 1 inch wider than the space. The vapor retarder on the cut side should be pulled to the side or face of the stud and stapled.
- Enough staples should be used to avoid gaps when stapling to the sides of the studs.
- Insulation should be wedged behind electric boxes and wiring. If excessive compression will result, the blanket may be cut or split so that the full installed thickness will be achieved. If the vapor retarder is cut, tape over the cut.
- Water piping must be protected in locales where freezing temperatures may occur. The blanket insulation should be wedged behind the piping.
- Insulate behind all exterior wall ductwork.
- Narrow areas between framing members around window and door areas should be stuffed with insulation. Cover these areas with vapor-retarder material.
- At exterior comers and intersections of exterior and interior walls, insulation should be placed in openings between studs. This must be done before exterior sheathing is applied.
- When stapling insulation flanges to the sides of studs (inset stapling), do not compress the insulation at the stapling flange more than is absolutely necessary. The greater the compression, the more the reduction in R-value. Do not staple flanges to the face of studs.
- Wedge insulation or caulk around any penetrations through the top and bottom wall plates.
- A separate small piece of insulation behind electrical boxes will minimize heat loss in these areas. The insulation blanket and vapor retarder should then be carefully cut to fit snugly at the top, bottom, and sides of the box.
- Be sure to insulate portions of walls separating air-conditioned or heated spaces from unconditioned spaces in multilevel homes.
- Overhanging cantilevered soffit areas should be carefully insulated. A single blanket length may be extended horizontally and turned up at the exterior band joist, or two separate pieces may be used. The vapor retarder should face the inside at the band joist and to the top side for the horizontal portion.
- Sill sealer between the bottom wall plate and the subfloor is desirable to cut air infiltration.
- Areas behind bath or shower units installed at exterior walls must be insulated before the units are installed.

Floors, basements, and crawl spaces. Floors over crawl spaces may be insulated either by insulating the foundation walls if the crawl space is unvented, or if the crawl space is vented by placing insulation between the joists.

Place the vapor retarder (polyethylene film) covering the crawl space ground against the wall, using tape to hold it against the wall until the insulation has been put into place. Place one edge of the insulation on top of the foundation wall, taping it temporarily in place as needed. The remainder of the insulation should be draped over and against the inside of the wall. Insulation is held permanently in place by the sill plate or header joist if no sill plate is used. At the bottom where the insulation stands away from the wall, use stones, bricks, or blocks spaced as needed to hold the insulation against the wall. The vapor retarder on the insulation should face inward (the warm side in winter). In this method of installation, the insulation also serves as a sill sealer.

Walls of unvented crawl spaces may also be insulated by fastening rigid insulation board to the inside face of the wall, extending from the ground to the top of the wall. Follow the manufacturer's instructions for the method and type of adhesive or fasteners to attach the insulation to the wall.

Floors over vented crawl spaces can be insulated by installing insulation between the joists and holding it in place by:

1. Using heavy-gauge wires pointed at both ends (they are made especially for this purpose); bow the wires and wedge them under the insulation and between the joists.
2. Lacing wire back and forth between nails placed in the bottom of joists.
3. Nailing chicken wire to bottoms of joists.

In all cases, the vapor-retarder side of the insulation should face the floor above.

Polyethylene may be used as a vapor retarder to cover the ground. If it is desired to protect the insulation from the weather, as may be the case in open crawl spaces, nail interior-grade softwood plywood, nail-base insulation board, or similar covering to the bottom of the floor joists. Be sure the water pipes are on the interior (warm-in-winter) side of the insulation envelope in all cases.

In basement and unvented crawl space constructions, sill sealer insulation may be used if necessary to prevent air infiltration between sill and foundation or between the header joist and foundation. The sill sealer is merely unrolled on top of the foundation wall and temporarily taped in place as necessary.

Wedge or staple short pieces of blanket insulation behind the band or header joists. As an alternative, when using insulation at the bottom of joists, the header joist may be insulated by folding the end of the blanket up and pushing it against the header.

Headers in cantilevered floor construction can be insulated as mentioned above. Insulate soffits below cantilevered floors by cutting blankets to fit and wedging them in place, vapor retarder up. As an alternative, these headers and soffits can be insulated by folding the end of the blanket against the header.

Specific guidelines for installing insulation under floors, in basements, and in crawl spaces are:

- Insulation installed in floors over unheated basements and vented and unvented crawl spaces should be applied with the vapor-retarder side facing up. When floor insulation is applied over a partially heated basement, the vapor retarder may face down.
- Commercially available wire fasteners with pointed ends or galvanized lacing wire may be used to support insulation blankets between the joist with vapor retarder facing up.
- If the bottom surface of the blanket is at the bottom of the floor joists, separate blanket pieces should be installed at the band joist area with the vapor retarder facing in.
- Sill sealer should be applied over the top of the foundation wall before the sill plate, if any, is placed to minimize infiltration at the joint.
- Openings around ductwork, pipes, and wiring between heated and nonheated spaces should be stuffed with insulation.

- Exposed vapor-retarder facings in floors above partially heated basements or on basement walls should be covered, as they are to some degree combustible. Gypsum board, paneling and ceiling tiles, or panels with acceptable flame-spread ratings may be used.
- To ensure full R-value when insulating basement walls with R-11 blankets, 2- by 3-inch studs may be installed 1 inch from the surface of the wall, thus achieving a full 3½-inch cavity.
- When needed, rigid perimeter insulation should be installed at the edges of slab-on-grade floors. The insulation should extend either down the foundation wall or down the wall and horizontally under the slab for total distance of at least 24 inches. The ground-cover vapor-retarder membrane should be below any horizontal perimeter insulation.

### *Vapor retarders*

Vapor retarders are used in walls, ceilings, and sometimes in floors for the purpose of limiting migration of water vapor to a cold surface where it may condense or freeze. The term “vapor barrier” is common construction language. However, construction vapor barriers such as polyethylene and facings on insulation batts and blankets do not completely bar moisture vapor transmission. As a result, the term “vapor retarder” is used in this handbook.

In a typical house for a family of four, about 2 to 3 gallons of water are produced per day. About half of this is moisture exhaled from the body in the normal breathing process. The other half is a result of showering, bathing, cooking, washing dishes, washing clothes, and similar water-consuming tasks. Water vapor from these activities increases indoor relative humidity.

The ability of air to retain water in the vapor state decreases as the air temperature drops. When the water vapor content (humidity) in the air becomes high enough or the temperature becomes low enough, the water vapor saturation point of the air is reached. (The relative humidity is 100 percent.) The dewpoint has then been reached, and water vapor in the air condenses to the liquid state. Condensation can also occur at relative humidities well below 100 percent when moisture-laden air comes in contact with a cold surface. This is why condensation sometimes occurs in winter on inside colder surfaces such as window glass, the inside surface of metal grilles of exhaust fans, and even the inside surfaces of exterior walls. A little such condensation is only a nuisance, but a lot of it can cause deterioration of some building materials.

In older houses, problems with condensation of moisture in winter were relatively rare because enough dry winter air leaked into and out of the house to remove the moisture that was produced.

Since energy-conserving houses are being built to reduce air infiltration, it is necessary to pay careful attention to vapor retarders and ventilation to avoid winter moisture problems.

There are good reasons to minimize the migration of warm, moisture-laden air through building sections such as exterior wall or ceilings. The temperature progressively decreases in winter from the warmer inside to the colder outside of the building section. It may become low enough to cause the water vapor to condense and accumulate in the framing and building materials. This can ultimately cause deterioration if such moisture condensation is frequent or continuous. Sometimes the water vapor freezes as it comes in contact with a colder surface, such as the inside of the roof sheathing in the attic. If so, on a warm day the ice melts, causing perhaps substantial water problems.

There are three ways to minimize potential problems with water vapor in wall, floors, and attics: (1) vapor retarders can be used to limit water vapor transmission; (2) sufficient ventilation can be provided to reduce excessive water vapor in the habitable space; or (3) the building section can be ventilated so that excessive water vapor is dissipated by outdoor air. Providing sufficient ventilation of the habitable space to do away with the need for vapor retarders would be wasteful of energy.

Ventilation of floor and wall sections is generally not necessary and causes some additional heat loss. So, the use of vapor retarders is advisable on the warm-in-winter side of insulated floor sections over crawl spaces and on exterior walls.

In attic spaces that can be adequately ventilated, a vapor retarder in the ceiling may not be necessary, or even in some cases desirable. Where the roof pitch is low, or in flat or cathedral roof constructions where adequate ventilation is difficult to achieve, vapor retarders in the ceiling are generally advisable.

It is desirable to use a vapor retarder in the ceiling and adequate attic ventilation when design temperatures are −20 °F or lower in winter. If there is adequate attic ventilation, it is believed that vapor retarders are not usually necessary in climates with design temperatures higher than −20 °F in winter. Experience indicates that water vapor condensation problems in the attics and ceilings are a very rare Occurrence and that in almost every case when they occur, the cause is inadequate attic ventilation or excessive moisture production in the house. Usually such high moisture production is related to the excessive use of humidifiers, water seepage into basements, lack of vapor retarder over damp ground in crawl spaces, water seepage into heating ducts located under a slab, unvented gas space heaters, or similar items.

When it is possible to provide adequate attic ventilation, it may be undesirable to install a ceiling vapor retarder in houses where no air is required for combustion. Air from combustion and air escaping through gas or oil furnace and hot water heater flue (resulting in infiltration of an equal amount of makeup air) help to remove substantial amounts of indoor water vapor. Electrically heated houses (where no combustion air is needed) with low air infiltration rates, normal rates of household vapor production, and a vapor retarder in the ceiling may have sufficient moisture buildup to require periodic operation of a dehumidifier.

A precise formula for when and where to use and not to use vapor retarders in ceilings cannot be simply stated. There are too many variables that affect their use, and only a limited amount of information is available from applied research. Local experience is the best guide.

As an alternative to using a vapor retarder on a batt or blanket, 4-mil polyethylene film can be stapled to the inside faces of wall plates and studs or to the bottom of ceiling joists or trusses. As installed, this may be considered a more effective vapor retarder than batts or blankets with vapor retarder facings. Other vapor retarders include:

1. Foil-backed gypsum board on the inside surface of exterior walls or ceilings.
2. Two coats of a paint resistant to vapor penetration on the inside surface of exterior walls or ceilings. One major manufacturer of household paints has determined that two coats of its alkyd semi-gloss interior paint, having a dry film thickness 2.4 mils, has a vapor permeance of 0.9 perms. Typical latex paints have a relatively high vapor permeance.

A vapor retarder, such as 4- or 6-mil polyethylene film, is usually desirable over the ground in a crawl space. Four mils is adequate, but 6-mil film is more puncture-resistant. Stretch the film over the ground and turn up the edges a few inches at the walls. At intervals tape the film to the wall: Rocks, bricks, blocks, or similar (nonwood) weights can also be used to hold the film in place. If a lap is necessary, about 1 foot is adequate. Place a few weights on the lapped films.

Two factors related to condensation in a thermally well-protected house tend to offset each other. Because such houses have significantly lower amounts of air infiltration, the effect of dry (winter) air diluting the water vapor is reduced, relative humidity is increased, and condensation is more likely to occur. However, because such houses have warmer inside surface temperature, there is less tendency for condensation to occur.

In houses that have low amounts of air infiltration, condensation may occur on double glass or metal sash in cold

climates. Thermal breaks in the metal sash and/or triple glazing usually solve the problem, unless there is some excessive moisture source. If so, it must be reduced or eliminated.

## Interior Wall and Ceiling Finish

The most widely used wall and ceiling finish is gypsum board. It has the advantages of being economical, noncombustible, and easy to install and repair. Another popular wall covering is paneling, in 4- by 8-foot sheets that may be plywood, hardboard, or particleboard. Often this paneling is applied over a gypsum board base. A more costly and labor-intensive type of paneling is available in the form of tongue-and-groove or shiplap boards.

### *Gypsum board*

Several types of gypsum board, such as fire-rated, water-resistant, and sound-deadening board, are available to satisfy specific needs, but regular board is used most commonly. Regular gypsum board is faced with a strong paper that accommodates almost any type of decorative treatment. Edges may be tapered, square, beveled, or tapered with a round edge. The tapered edges are designed to be finished with joint compound and tape. Square edges are used where another finish surface such as wallpaper, paneling, or tile is to be applied. Beveled edges give the effect of paneling. Gypsum board is available in 4-foot widths and in lengths up to 16 feet.

Although all gypsum board is noncombustible and thus provides some fire protection, fire-rated board gives added protection. The core is reinforced so that it remains intact even after the chemically combined water has been released from the gypsum. This type of board is primarily used where a rated firewall is required or where major structural members require fire protection. Such protection may be required in multifamily or special types of buildings but is not normally required in single-family dwellings, except that some codes may require fire-rated board on a wall between the garage and the house. Fire-rated board may provide a finished surface or be used as a backer board for some other type of finish.

Water-resistant board is most often used as a backer for tile, but could be used with other finishes in high-moisture areas such as bathrooms or kitchens. It is particularly important that it be used around bathtubs and showers where leaks could develop and cause deterioration of regular gypsum board. The water resistance is provided by an asphalt–wax emulsion combined with the gypsum.

Sound-deadening board is normally used between living units in multifamily dwellings, but can also improve privacy for single-family houses. This board is also primarily a backer with regular gypsum board applied over it.

The regular and fie-rated boards are also available with a variety of finishes laminated to the face. The most widely used finish is vinyl with colors, textures, or patterns imprinted. The patterns may be wood grain applied with a photographic process that gives the appearance of wood paneling. These usually have a finished beveled edge, so that no further finish is required.

Table 14 lists maximum member spacing for the various thicknesses of gypsum board.

When the single-layer system is used, the 4-foot-wide gypsum sheets are applied vertically or horizontally on the walls after the ceiling has been covered. Vertical application covers three stud spaces when studs are spaced 16 inches on center, and two when spacing is 24 inches. Edges should be centered on studs, and only moderate contact should be made between edges of adjacent sheets.

Fivepenny cooler-type nails ($1\frac{5}{8}$ in long) should be used with ½-inch gypsum, and fourpenny ($1\frac{3}{8}$ in long) with material $\frac{3}{8}$ inch thick. Ring-shank nails, about $\frac{1}{8}$ inch shorter, can also be used. Many builders prefer to use screws rather than nails in order to avoid nail pops (nails working their way out of framing) as a result of changes in moisture content of the framing. Screws should be 1% inches long. Nail pops are relatively few if the moisture content of framing members is less than 15 percent when gypsum board is applied. It is good practice, when framing members have a high moisture content, to allow them to approach moisture equilibrium before the gypsum board is applied. Nails should be spaced 6 to 8 inches for side walls and 5 to 7 inches for ceiling application (fig. 155). Minimum edge distance is $\frac{3}{8}$ inch.

The horizontal method of application is best adapted to rooms in which full-length sheets can be used, because then it minimizes the number of vertical joints. Where joints are necessary, they should be made at windows or doors. Nail spacing is the same as that used in vertical application. Normally, horizontal nailing blocks between studs are not required, if stud spacing is not greater than 16 inches on center and gypsum board is $\frac{3}{8}$ inch or thicker. However, nailing blocks may be used when spacing is greater, or when an impact-resistant joint is required (fig. 155).

Another method of gypsum-board application (laminated two-ply) includes an undercourse of $\frac{3}{8}$-inch material applied vertically and nailed in place. The finish $\frac{3}{8}$-inch sheet is applied horizontally, usually in room-size lengths, with an adhesive. This adhesive is either applied in ribbons, or is spread with a notched trowel. The manufacturer's recommendations should be followed in all respects.

**Table 14**–*Gypsum board thickness (single layer)*

| Orientation of length of sheet to framing members | Mininum thickness (in) | Maximum spacing of supports (on center) (in) | |
|---|---|---|---|
| | | Walls | Ceilings |
| Parallel | 3/8 | 16 | — |
| | 1/2 | 24 | 16 |
| | 5/8 | 24 | 16 |
| Perpendicular | 3/8 | 16 | 16 |
| | 1/2 | 24 | 24 |
| | 5/8 | 24 | 24 |

Gypsum board with laminated finish may also be applied on walls with an adhesive so the surface is left undisturbed. An alternative is to use nails with heads that are coated to match the finish. In either case the boards are 4 by 8 feet and applied vertically, like paneling. Edges are finished, so no additional finishing is required.

Nails and screws in the regular gypsum wallboard should be driven with the heads slightly below the surface. The crowned head of the hammer forms a small dimple in the wallboard (fig. 156A). A nail set should not be used, and care should be taken to avoid breaking the paper face.

Joint cement, or spackle, is used to apply the tape over the tapered edge joints and to smooth and level the surface. It comes in powder form and after mixing with water is a soft putty consistency easily spread with a trowel or putty knife. It can also be obtained in premixed form. The general procedure for taping (fig. 156B) is as follows:

1. Use a wide spackling knife (5 in) and spread the cement in the tapered edges, starting at the top of the wall.
2. Press the tape into the recess with the putty knife until the joint cement is forced through the perforations.
3. Cover the tape with additional cement, feathering the outer edges.
4. Allow the cement to dry, sand the joint lightly, and then apply the second coat, feathering the edges. A steel trowel is sometimes used in applying the second coat. For best results, a third coat may be applied, feathering beyond the second coat.
5. After the joint cement is dry, sand smooth (an electric vibrating hand-sander works well).
6. For hiding hammer indentations, fill with joint cement and sand smooth when dry. Repeat with a second coat if necessary.

Interior comers may be treated with tape. Fold the tape down the center to a right angle (fig. 156C) and (a) apply cement at the comer, (b) press the tape in place, and (c) finish the comer with joint cement. Sand smooth when dry and apply a second coat.

The interior comers between walls and ceiling may also be concealed with some type of molding (fig. 156D). When moldings are used, the joint need not be taped.

Wallboard comer beads (metal) at exterior comers prevent damage to the gypsum board (fig. 156E). They are fastened in place and covered with joint cement.

### *Paneling*

Plywood, hardboard, and particleboard are usually in 4- by 8-foot sheets for vertical application. However, 7-foot-long panels can sometimes be purchased for use in basements or other low-ceiling areas. Plywood can be purchased in a number of species and finishes with wide variation in costs. Hardboard and particleboard imprinted with a wood grain pattern are generally less expensive than plywood. A photograph of wood is used to imprint a facing material, which produces a very realistic pattern. Both smooth and textured facings are also available in solid colors as well as designs. Facing materials are usually easy to clean.

Paneling material should be delivered to the site and placed in the heated space at least 24 hours before installation to allow it to adapt to the moisture and temperature of the room. Stack the panels, separated by full-length strips, to allow air to get to all panel faces and backs (fig. 157). Conditioning can also be accomplished by standing panels around the room.

Installation of the first panel is critical for establishing vertical edges and locating edges over a stud. Place the first panel butted against a comer of the room. Make sure the outer edge is vertical by holding a plumb bob at the top comer; then if the outer edge is over a stud, the panel can be secured. If there is no stud at that point, measure the width that must be cut off for the edge to coincide with a stud. Then, mark or scribe the amount to be cut off, measuring from the comer. The use of an art compass to scribe the panel (fig. 158) assures the right cut even if the comer is uneven or not vertical. After the cut is made, fit the panel snugly into the comer and secure it. Successive panels are placed with moderate contact against the preceding one, and 16-inch or 24-inch stud spacing should assure that all edges are over a stud.

Cutouts for doors and windows or heat registers require careful measurement. Take dimensions from the edge of the last applied panel for width, and from the ceiling or floor for height. Then transfer these to the panel and proceed with cutting. For electrical boxes, paint or run chalk around the box edges. Next carefully position the panel

**Figure 155 –** *Installing gypsum board on walls:*

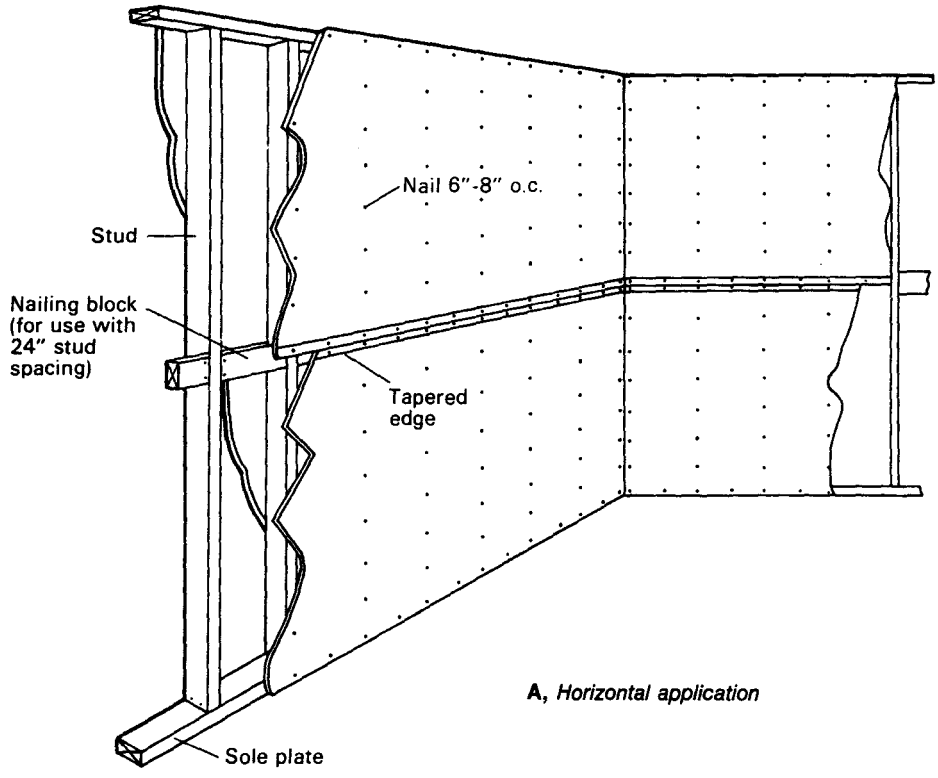


**A,** *Horizontal application*

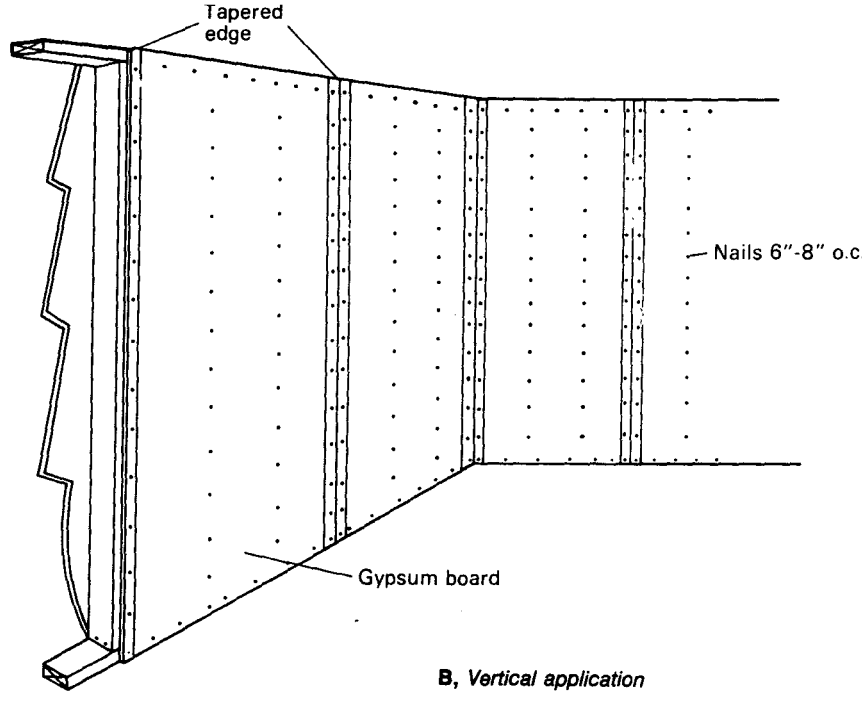


**B,** *Vertical application*

**Figure 156** – *Finishing gypsum board:*

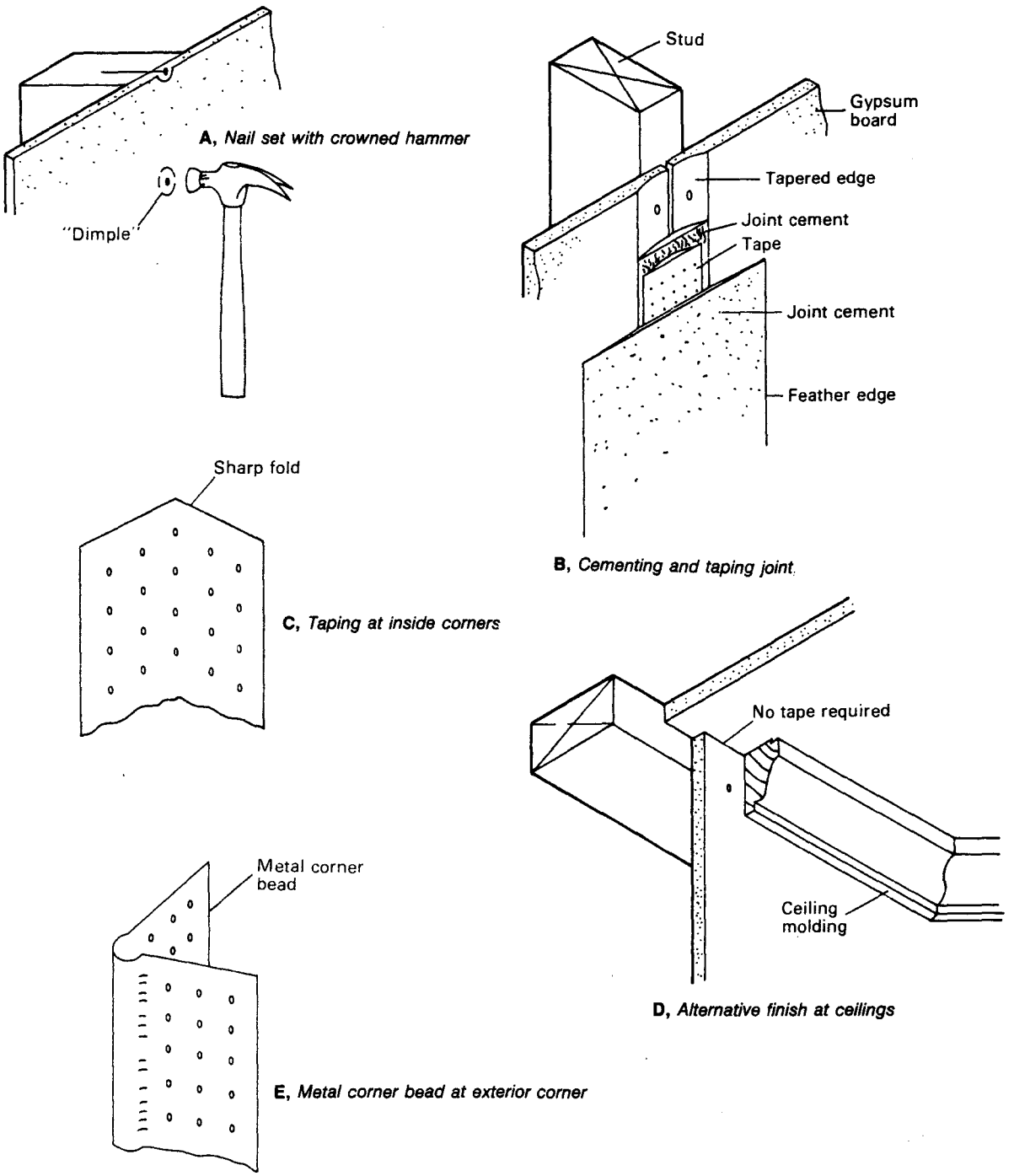


**A,** *Nail set with crowned hammer*

**B,** *Cementing and taping joint*

**C,** *Taping at inside corners*

**D,** *Alternative finish at ceilings*

**E,** *Metal corner bead at exterior corner*

and press it firmly over the box, transferring the outline to the back of the panel (fig. 159), and cut out the section.

Panels can be fastened with nails or adhesive. Adhesive is sometimes preferable because no nailheads can mar the finish. Most adhesives include instructions for application, and these instructions should be followed carefully. Use an adhesive that allows enough open assembly time to adjust the panel for a good fit. Where panels are nailed, use small finishing nails (brads). Use 1%-inch-long nails for materials ¼ or 3/8 inch thick, and 8 to 10 inches apart on edges and at intermediate supports. Many panels are grooved and nails can be driven in these grooves. Set nails slightly with a nail set. Many prefinished materials are furnished with small nails having heads that match the color of the finish; thus no setting is required.

**Figure 157**–*Sacking panels for conditioning to room environment prior to use.*

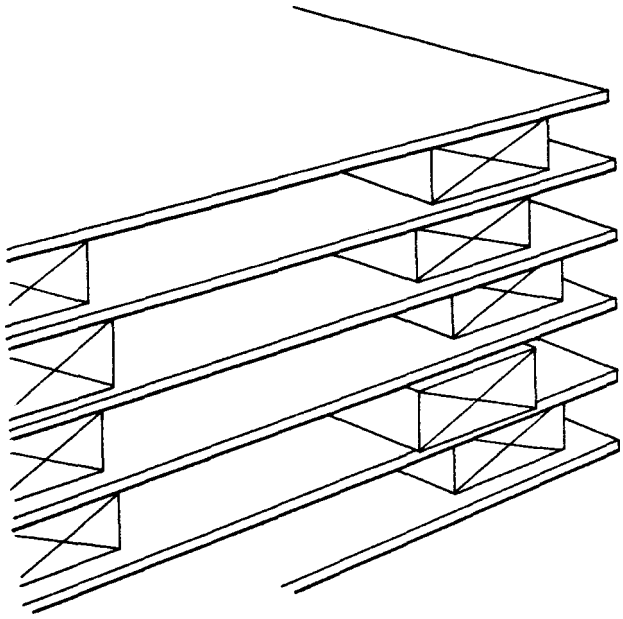

**Figure 158**–*Scribing of cut at panel for conditioning to room environment prior to use.*

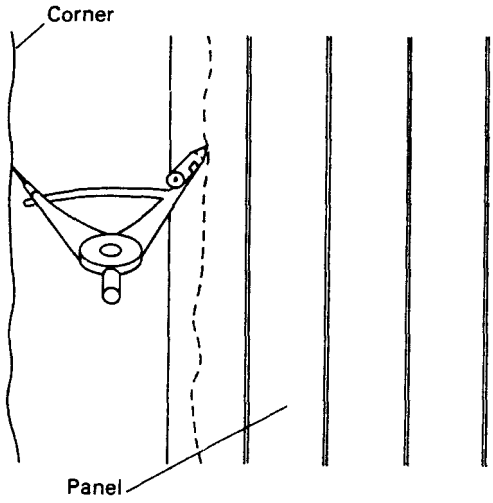


The right moldings add the final decorative accent for fine paneling. And, very practically, they also cover seams and joints at ceiling and floor, and protect comers. Moldings also provide a variety of midwall transitions from one sheet of paneling to the next.

Measure each piece of molding separately for the area it is to occupy. For example, don't assume that lengths at the floor and ceiling are identical. When you measure, remember to allow for mitering—moldingwill be longer than its corresponding wall section if either end is an outside comer, and shorter if two inside comers frame it.

**Figure 159**–*Chalk outlet box for marking cutout.*

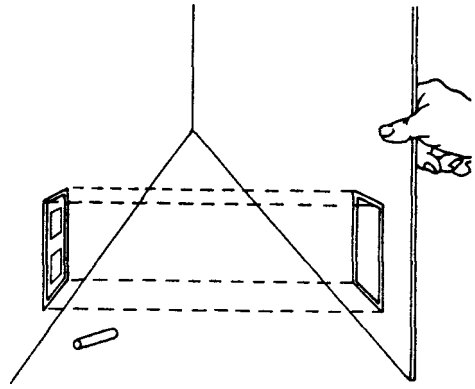

Molding should be cut with a fine-tooth saw and miter box for accuracy. To splice molding sections along a wall, 45° cuts are made in the same direction on both pieces. Where moldings meet at right angles, trim both pieces at opposite 45° angles so that they will join to form a tight right angle. Finish moldings with stain or paint after cutting and before installing in place. Use 3d nails, finished or colored, countersink, and cover with matching putty stick.

Tongue-and-groove or shiplap wood paneling is available in various widths. Wood is usually limited to no more than 8 inches nominal width. This paneling should be stacked in the room to be paneled, as recommended for 4- by 8-foot panels, to stabilize at the temperature and moisture of the room. Paneling is usually applied vertically, but may be applied horizontally for special effects.

Vertically applied paneling is nailed to horizontal furring strips or to nailing blocks between studs (fig. 160). Nail with 1½- to 2-inch finishing or casing nails. Blind nail through the tongue and, for 8-inch boards, face nail near the opposite edge. Where adhesive is used, only blind nail through the tongue. Moldings can also be used with wood paneling.

### *Wainscot*

Wainscoting is a lining applied to the lower 3 to 4 feet of a wall. It is used in specific types of rooms to protect that portion of the wall but may be decorative as well as functional.

In dining rooms, studies, or offices, the wainscot is about the height of a chair back to protect the wall when chairs are pushed against it. The traditional height is 36 inches; however, 32 inches is often used in order to make optimal use of 4- by 8-foot panels. A molding or cap is applied at the top of the wainscot and is sometimes

**Figure 160**–*Blocking between studs for vertical wood paneling.*

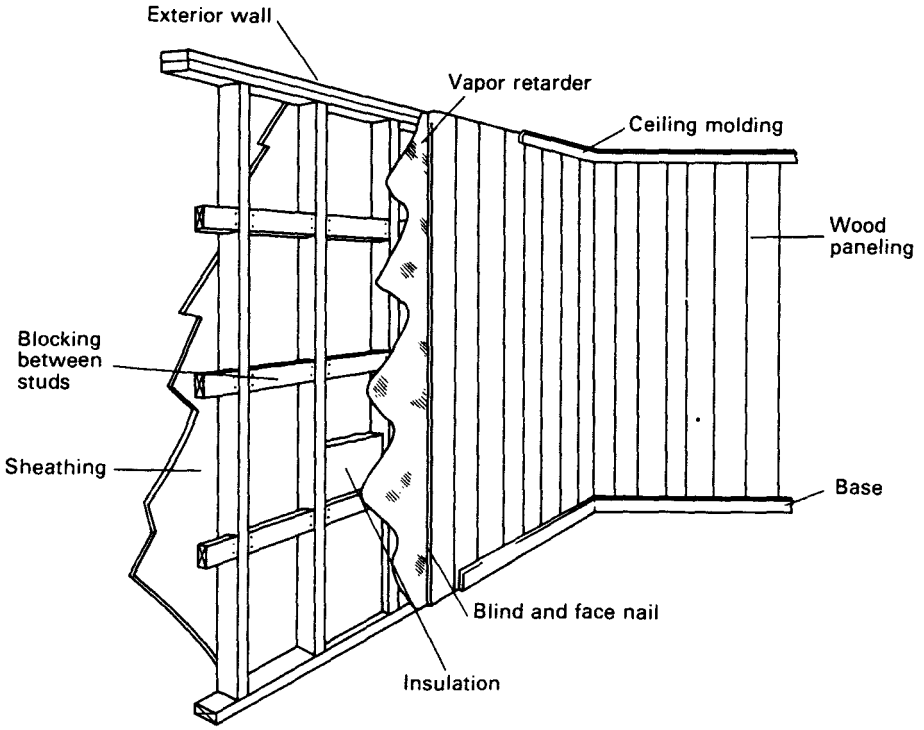


referred to as a chair rail. Application of this type of wainscot and of paneling is similar except that longer nails may be required to go through the wall covering under the wainscot and penetrate the studs adequately.

Wainscoting is also used in wet areas such as bathrooms or rooms with swimming pools or hot tubs. Ceramic tile is the usual material for this application. Tile should be installed around bathtubs, behind sinks or laundry tubs, and in any other area where water may be splashed. In these areas, application should always be made over water-resistant gypsum board.

Commonly, tile is applied to a gypsum board base with an adhesive. The gypsum board should be prepared as for painting, having all joints taped and nailheads covered with two coats of joint compound. In wet areas, water-resistant gypsum board must be used, and installed on framing not to exceed 16 inches on center. A ¼-inch gap should be left between the paper edge of the gypsum board and a bathtub or shower receptor. This gap must be filled with a nonhardening caulk.

Where tile is applied to a plywood base, use underlayment grade plywood with exterior glue or exterior grade C-C plugged or better. Use $^3/_8$-inch or thicker plywood with face grain perpendicular to studs or ½ inch or thicker with face grain parallel to studs. Allow $^1/_8$-inch expansion joints between sheets. Provide 2- by 4-inch solid blocking between framing members at horizontal edges. Prior to installation, seal all plywood edges with a quality exterior primer or aluminum paint.

## Wood Flooring

Flooring is available in a variety of species and types of wood. Although some softwood flooring is used, most strip flooring in new construction is hardwood. Species graded for flooring use include oak, beech, birch, hard maple, and pecan. In addition, some foreign species are used for parquet flooring.

Appearance alone determines the grades of hardwood flooring because all grades are equally strong and serviceable in any application. Oak, the most popular of the hardwoods, has four basic grades (table 15). Flooring that is practically free of defects and made mostly of heartwood is known as Clear, though it still may contain minor imperfections. The grade Select is almost clear, but contains more knots and color variations. The No. 1 and No. 2 Common grades have more markings than either of the other two grades and are often specified because of these natural features and the character they bring to the installation. Top grades are sometimes combined (as Select & Better) and special combinations are made for "shorts," the short pieces produced in manufacturing. The grades for other species also are shown in table 15. Usual strip flooring is 1½, 2, or 2¼ inches wide, and thickness may vary from ½ to ¾ inch. Planks are available up to 8 inches wide,

**Table 15** – *Hardwood flooring grades*

| Unfinished oak | Unfinished beech, birch, and hard maple | Unfinished pecan | Prefinished oak |
|---|---|---|---|
| Clear | First grade white hard maple | First grade red | Prime |
| Select & Better | First grade red beech and birch | First grade white | Standard & Better |
| Select | First grade | First grade | Standard |
| No. 1 Common | Second & Better | Second grade red | Tavern & Better |
| No. 2 Common | Second grade Third & Better Third grade | Second grade Third grade | Tavern |

### *Preparation of wood joists to receive flooring*

In joist construction with no basement, outside cross ventilation through vents or other openings in the foundation walls must be provided, with no dead air areas. A ground cover of 6-mil polyethylene film is essential as a moisture barrier.

Use exterior plywood, common pine, or other softwood suitable for subfloors. The plywood must be at least ½ inch thick. Lay panels with grain of faces at right angles to joists. Use appropriate nail sizes, nail spacing, and leave expansion space between plywood panels as recommended by the American Plywood Association. Mark location of joists on the plywood so that flooring can be nailed into them.

### *Preparation of a concrete slab to receive flooring*

Hardwood flooring can be installed successfully over a slab that is on grade or above grade. *Installations on slabs that are below grade are not recommended.* The slab must be constructed properly and the instructions below must be followed precisely.

Watch out for water. New concrete is heavy with moisture, an inherent enemy of wood. Proper on-grade slab construction requires a vapor retarder between the gravel fill and the slab. While this retards moisture entry through the slab, it also retards curing of the slab. So test for dryness, even if the slab has been in place over 2 years.

1. THE RUBBER MAT TEST. Lay a flat, noncorrugated rubber mat on the slab, place a weight on top to prevent moisture from escaping, and allow the mat to remain overnight. If there is moisture in the concrete, the covered area will show water marks when the mat is removed. Note that this test is worthless if the slab surface is other than light in color originally.
2. THE POLYETHYLENE FILM TEST. Tape a 1-foot square of heavy clear polyethylene film to the slab, sealing all edges with plastic packaging tape. If, after 24 hours, no clouding or drops of moisture develop on the underside of the film, the slab can be considered dry enough to install wood floors.
3. THE CALCIUM CHLORIDE TEST. Place a quarter teaspoonful of dry (anhydrous) calcium chloride crystals (available at drug stores) inside a 3-inch-diameter putty ring on the slab. Cover with a glass so that the crystals are totally sealed off from the air. If the crystals dissolve within 12 hours, the slab is too wet for a hardwood flooring installation.
4. THE PHENOLPHTHALEIN TEST. Put several drops of a 3 percent phenolphthalein solution in grain alcohol at various spots on the slab. (These products are available at drug stores or chemical supply houses.) If a red color develops in a few minutes, there is a moist alkaline substance present, and it would be best not to install hardwood flooring.

**NOTE:** The test used should be made in several areas of each room on both old and new slabs. The remedy for a moist slab is to wait until it dries naturally, or accelerate drying with heat and ventilation.

If the slab is sufficiently dry, start by installation of a good vapor retarder. To give added assurance that moisture does not reach the finished floor, a vapor retarder must be used on top of each slab. Where this is placed will depend on the type of nailing surface and/or the type of wood flooring used.

In all cases, prepare the slab by sweeping it clean. The slab must be sound, level, and free of grease, oil stains, and dust.

Plywood subflooring. This system uses ¾-inch or thicker exterior plywood as the subfloor nailing base (fig. 161), installed according to the following ,instructions.

Roll out 4-mil or heavier polyethylene film over the entire slab, overlapping edges 4 to 6 inches and allowing enough to extend under the baseboard on all sides. It does not require imbedding in mastic.

Lay plywood panels out loose over the entire floor. Cut the first sheet of every run so that end joints in adjacent runs will be staggered 4 feet. Leave a ¾-inch space at all wall lines and ¼ to ½ inch between panels. At doors and other vertical obstructions where molding will not be used to cover the void, cut the plywood to fit, leaving about $^1/_8$ inch of space.

**Figure 161**–*Plywood on slab method of installing strip oak flooring.*

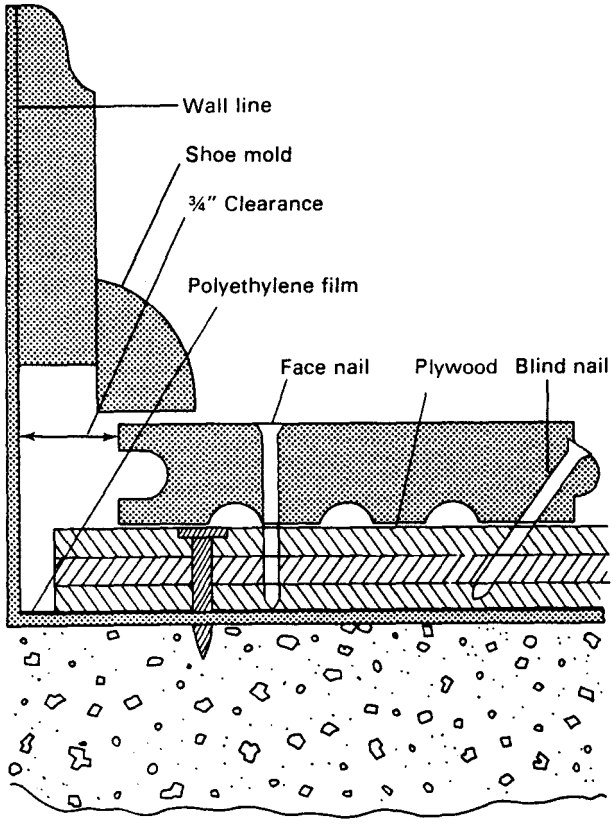


**Figure 162**–*Screed method of installing strip oak flooring over a concrete slab.*

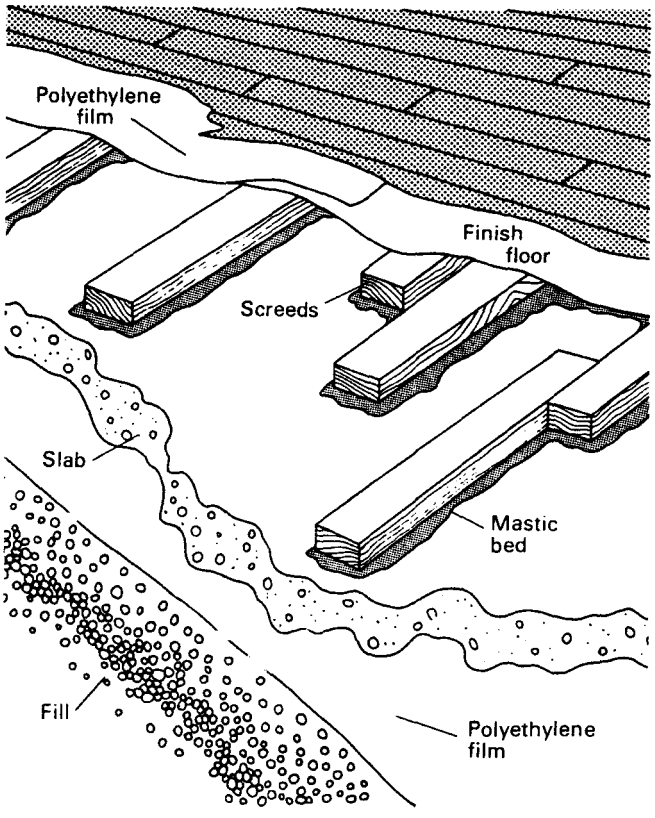


Fasten the plywood to the concrete with a power-actuated concrete nailer or hammer-driven concrete nails. Use a minimum of nine nails per panel, starting at the center of the panel and working toward the edges to be sure of flattening out the plywood and holding it securely.

An alternative method is to cut the plywood into 4- by 4-foot squares, score the back, and lay in mastic. However this requires the use of moisture retarders laid in mastic.

**Subflooring on screed.** This method uses flat, dry, 2- by 4-inch screeds (sometimes called sleepers) of random lengths from 18 to 48 inches. They must be preservative-treated with a product other than creosote, which might bleed through and stain the floor finish, and they must be dried after each treatment if the treatment process involves saturation with water (e.g., treatment with water-bornepreservatives).

Sweep the slab clean, prime with an asphalt primer, and allow to dry. Apply hot (poured) asphalt mastic and imbed the screeds, 12 inches on center, at right angles to the direction of the finished floor. Stagger joints and lap ends at least 4 inches. Leave a %-inch space between ends of screeds and walls (fig. 162).

Over the screeds spread a vapor retarder of 4- or 6-mil polyethylene film with edges lapped 6 inches or more. It is not necessary to seal the edges or to affix the film with mastic but avoid bunching or puncturing it, especially between screeds. The flooring finish is nailed through the film to the screeds.

Some installers prefer *to use the two-membrane asphalt felt or building paper with cut-back or cold stick adhesive as a vapor retarder.* The screeds are laid in rivers of mastic on the asphalt felt or building paper. In this system the polyethylene film over the screeds is recommended for the extra moisture protection provided at nominal cost.

The screeds method alone—that is, without a subfloor and spaced 12 inches on center—is satisfactory for all strip flooring and plank flooring to 4-inch width. Plank flooring wider than 4 inches requires either the plywood-on-slab subfloor or screeds plus a wood subfloor to provide an adequate nailing surface. The subfloor may be $^5/_8$-inch or thicker plywood or ¾-inch boards.

**Special considerations for parquet, herringbone, and similar flooring over slab.** These floors are normally laid in asphalt mastic and thus do not require a nailing surface on top of the slab. However, the need for a good

moisture retarder is most important, and it can be achieved by either of the following two methods.

***Polyethylene method.*** Prime the slab with an asphalt primer and allow to dry. Apply cold, cut-back asphalt mastic with a straight-edge trowel to the entire slab surface. Allow to dry 30 minutes. Unroll 4-mil polyethylene film over the slab, covering the entire area and lapping edges 4 inches. Stepping on every square inch of the floor to insure proper adhesion, "walk in" the film. Small bubbles are of no concern.

***Two-membrane asphalt felt or building paper method.*** Prime as above and apply mastic with a notched trowel at the rate of 50 square feet per gallon. Let set 2 hours. Roll out 15-pound asphalt felt or building paper, lapping the edges 4 inches. Butt ends. Apply another coating of mastic with the notched trowel and roll out a second layer of asphalt felt or building paper. Lay both layers in the same direction, but stagger the overlaps to achieve a more eventhickness.

This method applies only to tongue-and-groove parquet flooring where tongues and grooves are engaged. Other flooring types require a retarder applied to the slab by the first method.

The floor finish is laid in mastic on the vapor retarder.

### *Laying and fastening strip flooring*

The following instructions apply to strip flooring laid on plywood-on-slab, on screeds, and on plywood or board subfloors.

Where a plywood or board subfloor is used, start by renailing any loose area and sweeping the subfloor clean. Then cover it with a good grade of 15-pound asphalt felt or building paper, lapped 4 inches at the seams. This helps keep out dust, retards moisture from below, and helps prevent squeaks in dry seasons.

**Direction of floor finish.** For best appearance, lay the flooring in the direction of the longest dimension of the room or building (across or at right angles to the joists). If a hallway parallels the long dimension of the room, begin the flooring by snapping a chalk line through the center of the hall and work from there into the room. At the center of the hall, use a slip-tongue or spline in the two adjacent grooves to reverse direction to complete the hall.

**Starting to lay the floor.** Location and straight alignment of the first course is important. When starting within a room, place a strip of flooring ¾ inch (fig. 163) from the starter wall (or leave as much space as will be covered bv base and shoe mold). groove side toward wall, and mark a point on the subfloor at the edge of the flooring tongue. Do this near both comers of the room, and then snap a chalk line between the two points. Nail the first strip with its tongue on this line. The gap between that strip and the wall is needed for expansion space and will be hidden by the shoe mold.

If you're working with screeds on slab, you won't be able to snap a satisfactory chalk line on the loose polyethylene film laid over the screeds, of course. Make the same measurements and stretch a line between nails at the wall edges. Remove line after you get the starter board in place.

Lay the first strip along the starting chalk line, tongue out, and drive an 8d finishing nail at one end of the board, near the grooved edge. Drive additional nails at each joist or screed and at midpoints between joists, keeping the starter strip aligned with the chalk line. (Predrilling nail holes will prevent splits.) The nailheads will be covered by the shoe molding. Nail additional boards in the same way to complete the first course.

**Racking the floor.** Lay out seven or eight loose rows of flooring end to end in a staggered pattern with end joints at least 6 inches apart. Find or cut pieces to fit within ½ inch of the wall at the end of boards. Watch your pattern for even distribution of long and short pieces and to avoid clusters of short boards.

Fit each board snug, groove-to-tongue, and blind-nail through the tongue (fig. 164) according to the schedule shown in table 16. Countersink all nails. After the second or third course is in place you can change from a hammer to a floor nailing machine, which is easier to use, does a much better job, and automatically sets the nail. Various nailing machines use either a barbed fastener or staples, fed into the machine in clips. Fasteners are driven through the tongue of the flooring at the proper angle.

**Figure 163**–*Start nailing strip flooring ¾ inch from the wall.*

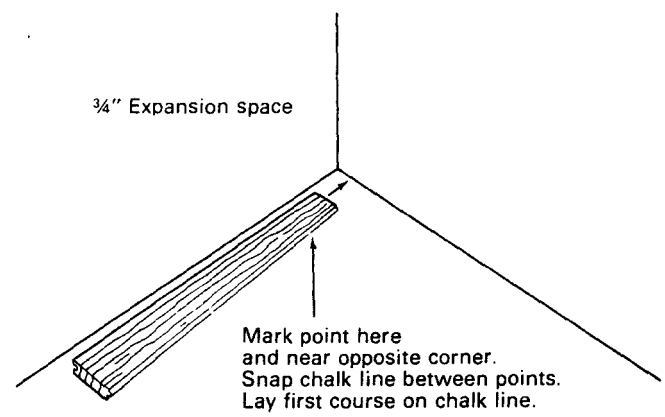

**Table 16**–*Nailing schedule for flooring*

| Flooring size | Fastener type | Fastener spacing |
|---|---|---|
| **Tongue-and-groove flooring (blind-nailed)** | | |
| ¾ x 1½, 2¼ and 3¼ inch | 2-inch machine-driven fasteners, 7d or 8d spirally grooved or plain shank nail | 10–12 inches apart[a] |
| ¾ x 3- to 8-inch squared plank | 2-inch machine driven fasteners, 7d or 8d spirally grooved or plain shank nail. | 8 inches apart into and between joists |
| ½ x 1½ and 2 inch | 1½-inch machine-driven fastener, 5d screw, cut steel or wire casing nail | 10 inches apart |
| 3/8 x 1½ and 2 inch | 1¼-inch machine-driven fastener, or 4d bright wire casing nail | 8 inches apart |
| **Square-edge flooring (facenailed through top face)** | | |
| 5/16 x 1½ and 2 inch | 1-inch 15-gauge fully barbed flooring brad | 2 nails every 7 inches |
| 5/16 x 1 1/3 inch | 1-inch 15-gauge fully barbed flooring brad | 1 nail every 5 inches on alternate sides of strip |

[a] If subfloor is ½-inch-thick plywood (actual thickness), fasten into each joist with additional fastening between.

When using the nailing machine to fasten ¾-inch-thick strip or plank flooring to plywood laid on a slab, be sure to use a 1¾-inch cleat, not the usual 2-inch cleat (barbed fastener) which may come out the back of the plywood and prevent nails from countersinking properly. In all other applications the 2-inch cleat is preferred.

Continue across the room, ending up on the far wall with the same %-inch space allowed on the beginning wall. It may be necessary to rip a strip to fit.

Avoid nailing into a subfloor joint. If the subfloor is at right angles to the finish floor, don't let ends of the finish floor meet over a subfloor joint.

**Nailing to screeds.** When nailing directly to screeds (no subfloor), nail at all screed intersections and to both screeds where a strip passes over a lapped screed joint. Since flooring ends are tongued and grooved, all end joints do not need to meet over screeds, but end joints of adjacent strips should not break over the same void between screeds.

Some long boards may have horizontal bends or "sweeps" resulting from a change in moisture content. A simple lever device can be made on the job to force such boards into position as well as pull up several courses. An alternative is to hammer against a short strip of flooring fitted against the crooked piece.

Shoe molding. Nail this to the baseboard, not the flooring, after the entire floor is in place (fig. 161).

### *Laying plank flooring*

This flooring is normally made in 3- to 8-inch widths and may have countersunk holes for securing planks with wood screws. These holes are then filled with wood plugs that are supplied with the flooring (fig. 165).

Plank is installed in the same manner as strip flooring, alternating courses by widths. Start with narrowest boards, then the next width, etc., and repeat the pattern.

Manufacturer's instructions for fastening the flooring vary and should be followed. The general practice is to blind-nail through the tongue as with conventional strip flooring. Then countersink one or more (depending on width of the plank) No. 9 or No. 12 screws at each end of each plank and at intervals along the plank to hold it securely. Cover the screws with wood plugs glued into the holes. Take care not to use too many screws—with the plugs in place, the screws tend to give the flooring a polka-dot appearance.

Be sure the screws are the right length. Use 1 inch if the flooring is laid over ¾-inch plywood on a slab. Use 1 to 1¼ inches in wood joist construction or over screeds.

Some manufacturers recommend facenailing in addition to other fastenings. Consult manufacturer's installation instructions for details.

Another practice sometimes recommended is to leave a slight crack, about the thickness of a putty knife, between planks.

### *Laying parquet flooring*

The styles and types of block and parquet flooring as well as the *recommended procedures for application vary*

**Figure 164**–*Nailing of flooring:*

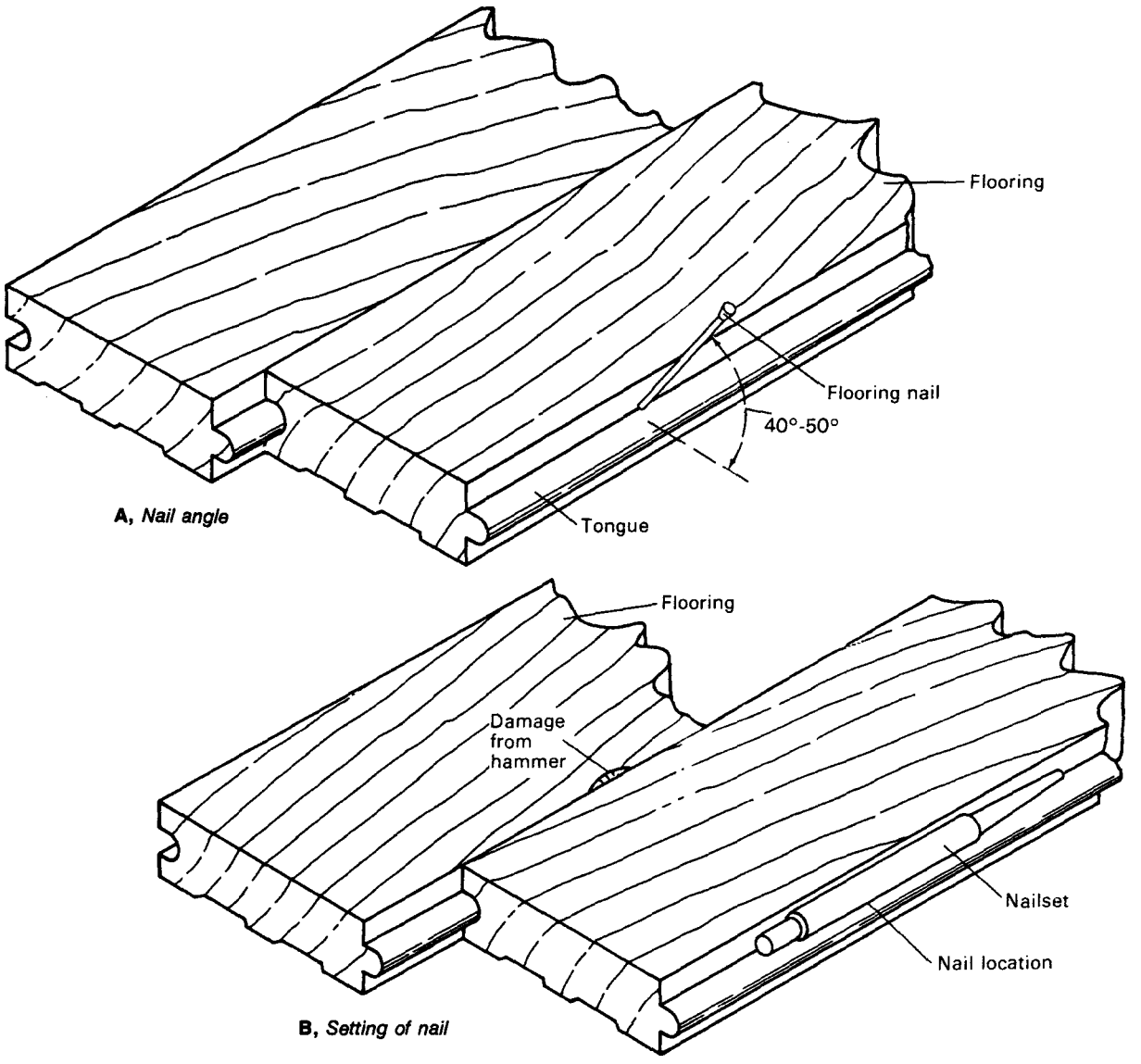


**A,** *Nail angle*

**B,** *Setting of nail*

***somewhat among the different manufacturers.*** Detailed installation instructions are usually provided with the flooring or are available from the manufacturer or distributor.

**Patterns of parquet flooring.** There are three ways to lay out parquet. The most common is with edges of parquet units (and thus the lines they form) square with the walls of the room. The second way is a diagonal pattern, with lines at a 45° angle to walls. The third is a complex layout with lines running in a herringbone pattern.

***Square pattern.*** Never use a wall as a starting line because walls are almost never truly straight. Instead, use a chalk line to snap a starting line about 3 feet or so from the handiest entry door to the room, roughly parallel to the nearest wall. Place this line exactly equal to four or five of the parquet units from the center of the entry doorway (fig. 166).

Next, find the center point of this base line (line A, fig. 166) and snap another line at an exact 90° angle to it from wall to wall. This will become your test line to help keep your pattern straight as the installation proceeds. A quick test for squareness is to measure 4 feet along one line from where they intersect, and 3 feet along the other. The distance between these two points will be 5 feet if the lines are truly square (fig. 166).

***Diagonal pattern.*** Measure equal distances from one comer of a room, along both walls, and snap a chalk line between these two points to form the base line. (This pattern need not be at a precise 45° angle to walls in order to give satisfactory appearance.) A test line should again

**Figure 165**–*Countersink screws in plank flooring and cover with plugs.*

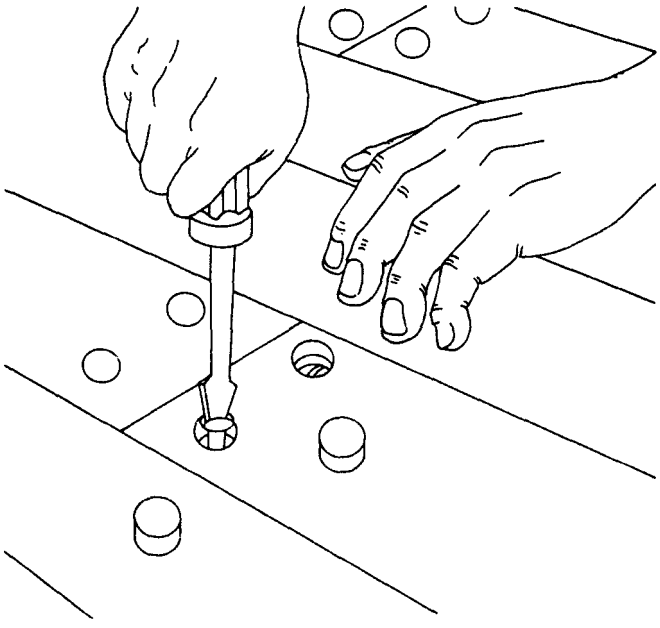

**Figure 166**–*Working lines for laying block in a square pattern.*

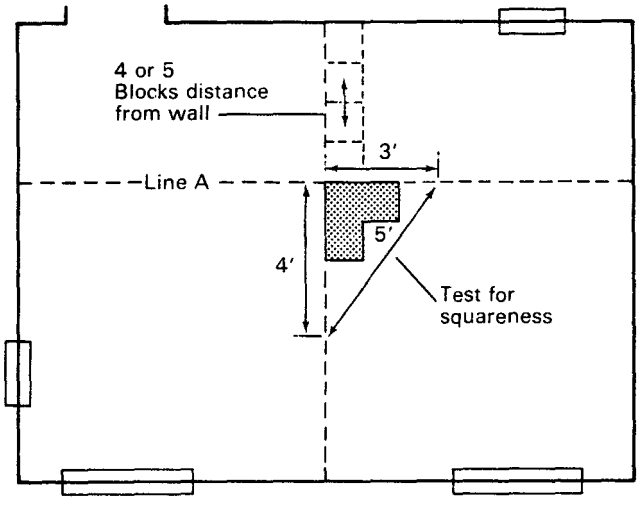


intersect the center of the base line at an exact 90° angle from the comer of the room (fig. 167).

*Herringbone pattern.* Most existing parquet patterns can be laid out with these two workmg lines. Herringbone, however, requires two test lines: one is at the 90° line already described; the other crosses the intersection of the first two lines, but at a 45° angle to both.

If such elaborate preliminary layout preparation seems a bit overdone, keep in mind that it is wood we are installing. Each piece must be carefully aligned with all of its

**Figure 167**–*Working lines for laying block in a diagonal pattern.*

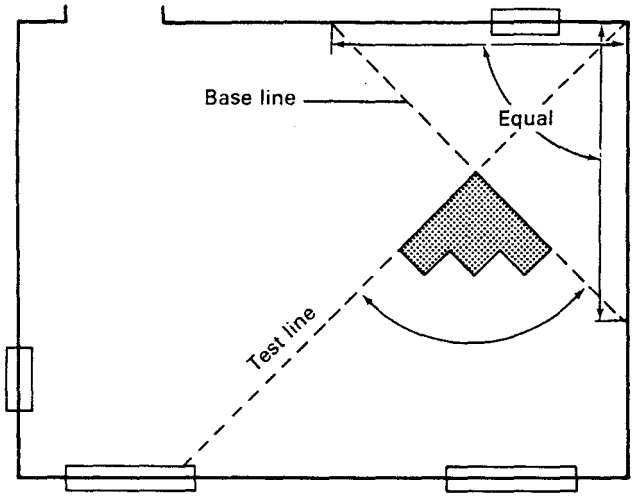


neighbors. Small variations in size, natural to wood, must be accommodated during installation to keep the overall pattern squared up. You cannot correct inaccuracies that have grown into a "creeping" pattern; by laying out the floor more carefully you prevent the development of larger problems during installation.

**Building the pattern.** Use a cold, cut-back asphalt mastic spread at the minimum rate of 50 square feet per gallon. Use the notched edge of the trowel. Allow to harden a minimum of 2 hours or up to 48 hours as directed by the manufacturer. The surface will be solid enough after 12 hours to allow you to snap working chalk lines on it. Use blocks of the flooring as stepping stones on the mastic to snap lines and begin the installation.

Wood parquet must always be installed in a pyramid, or stair-step sequence, rather than in rows. This again prevents the small inaccuracies of size in all wood from magnifying, or creeping, to give an appearance of misalignment. Place the first parquet unit carefully at the intersection of the base and test lines. Lay the next units ahead and to the right of the first one along the line. Then continue the stair-step sequence, watching carefully the comer alignment of new units with those already in place. Install in a quadrant of the room, leaving trimming at the walls until later. Then return to the base and test lines and lay another quadrant, repeating the stair-step sequence.

Install the last quadrant from the base line to the door. A reducer strip may be required at the doorway.

Most wood floor mastics, regardless of type or open time (time between applying adhesive and applying wood floor), allow the tiles to slip or skid when sidewise pressure is applied for some time after open time has elapsed.

By working from knee boards or plywood panels laid on top of the installed area of flooring you avoid this sidewise pressure. For the same reason no heavy furniture or activity should be allowed on the finished parquet floor for about 24 hours. Some mastics also require rolling.

Cut blocks or parquetry pieces to fit at walls, allowing ¾-inch expansion space on all sides. Use cork blocking in 3-inch lengths between flooring edge and wall to permit the flooring to expand and contract by compressing and relaxing the cork.

With blocks, a diagonal pattern is recommended in corridors and in rooms where the length is more than 1½ times the width. This diagonal placement minimizes expansion under conditions of high humidity.

## Other Floor Coverings

Apart from wood, a wide variety of floor coverings are available for application over wood subfloor. Special preparation may be required for installation on a concrete slab, as discussed later. In making a selection of floor covering, the usual considerations are maintenance, durability, comfort, esthetics, and initial cost. The floor coverings commonly used are carpet, sheet vinyl, vinyl tile, and ceramic tile.

Regardless of the type of floor covering, installation should not begin until the work of all other trades has been completed and the area cleared of extraneous materials. If it is necessary to install floor covering before all other work is finished, the installed covering should be immediately covered with heavy paper or other suitable protective covering.

### *Carpet*

Carpeting is often desired because of its absorption of sound, resistance to impact, appearance, and ease of maintenance. It can be installed over almost any type of subfloor, or directly to a concrete slab. The thickness of carpet and padding help to even out slight roughness or discontinuities, so little preparation is required. Installation is usually done by a professional with appropriate tools and skills for cutting to a precise size and stretching between tack strips at the room perimeter.

### *Sheet vinyl and resilient tile*

A smooth underlayment is required for these resilient floor coverings because they conform to the contour of the surface under them. Plywood subfloor should meet the requirements of U.S. Product Standard PS1 83 published by the American Plywood Association, and be in grades and thicknesses recommended by the floor covering manufacturer. Hardboard must meet the requirements of ANSI Standard A135.4, Basic Hardboard, Class 4, underlayment grade with a thickness tolerance of 0.215 ± 0.005 inch. This standard is published by the American Hardboard Association. The subfloor and underlayment assembly must be solid, well nailed at the joists, and free from springiness. Install plywood underlayment with cross-joints staggered at least 16 inches. Nail the center of the panel first, working out to the edges. Leave a space between underlayment sheet edges equal to the thickness of a dime (approximately $^1/_{32}$ in). Drive fasteners flush or set not more than $^1/_{16}$ inch below the surface. Fill any low spots, holes, splits, or openings of more than $^1/_{16}$ inch with a hard-set, nonshrinking latex compound. Sand after drying.

The installation of resilient materials is usually done by a contractor specializing in that type of flooring. In any case, it should be installed according to manufacturer's instructions. The flooring and adhesive must be maintained at a minimum temperature of 70 °F for at least 24 hours before, during, and 24 hours after application.

### *Ceramic tile*

Where ceramic tile is used over a wood joist floor, maximum joist spacing is 16 inches on center. Plywood $^5/_8$ inch thick is required for subfloor. An underlayment of $^3/_8$-inch plywood is secured to the subfloor with an adhesive or by nailing with 6d ring-shank nails at 6-inch spacing along panel edges and 8-inch spacing at interior supports. Plywood can serve as a combination subfloor underlayment if the plywood is $^5/_8$-inch Group 1, ¾-inch Group 2 or 3, or $^7/_8$-inch Group 4. The face grain of the plywood must be at right angles to the joists, and edges must be either tongue and groove or supported by 2 by 4 blocking. Leave a ¼-inch-wide space between underlayment sheet edges and all materials they abut, such as other underlayment sheet edges, walls, drains, and posts.

, A variety of mortars and adhesives are available for setting the tile. Follow the manufacturer's instructions for application of these materials. Also follow tile manufacturer's recommendations for type of setting material, and exposure to traffic and environmental conditions.

## Interior Doors

Interior doors are usually purchased prehung, hinged to a sidejamb, and with stops and latch hardware in place. The main installation required is nailing to the rough framing. Hollowcore doors are commonly used except where fire resistance or sound transmission are critical, as between the garage and the house. Hollowcore doors consist of thin facings glued to a perimeter frame and to a core material such as expanded paper honeycomb between

the framing. Where a natural wood finish is desired, plywood with an attractive veneer face is used. Where doors are to be painted, paper-overlaid plywood or hardboard is used. Hardboard may also be overlaid with a simulated wood grain pattern or be molded to give the appearance of a colonial-style panel door. Traditionally constructed panel doors are available at higher cost, and louvered doors can be used where air circulation is desirable.

Rough openings in the stud walls for interior doors are usually framed out to be 2 inches more than the door height and 2 inches more than the door width. The standard door height is 6 feet 8 inches. Common minimum widths for single interior doors are: (a) bedroom and other habitable rooms, 2 feet 6 inches; (b) bathrooms, 2 feet 4 inches; (c) small closet and linen closets, 2 feet. These sizes vary a great deal, and sliding doors, folding door units, and similar types are often used for full-width access to closets.

Folding closet doors can also be purchased in an 8-foot height so that full floor to ceiling access is given, and no header is required. Standard jamb width is $4^{9}/_{16}$ inches to fit a 2- by 4-inch stud wall with ½-inch gypsum board each side. While it may not be necessary to lock many interior doors, privacy locks are often used on bathroom and bedroom doors.

Doors must be purchased as left-hand or right-hand depending on the direction of swing. The right-hand door has hinges on the right as the door swings toward you, whereas the left-hand door has hinges on the left (fig. 168).

**Figure 168**–*Direction of swing of right- and left-hand doors.*

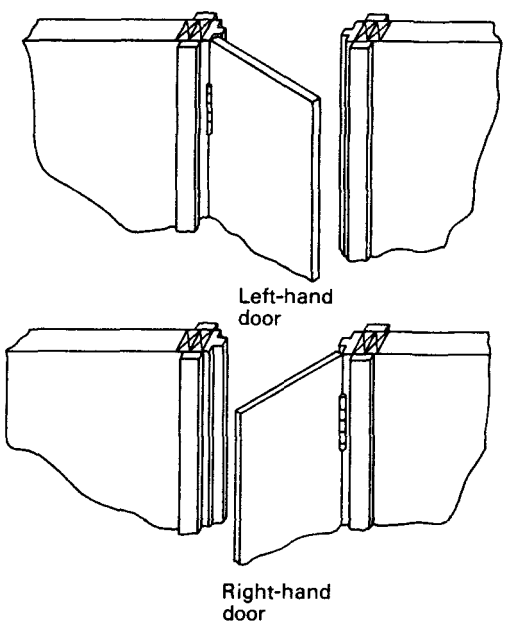


The frame is set in place and jambs are nailed to the rough framing. Where there is a gap between jambs and rough framing, place shims in the gap before nailing. Use two 8d finishing nails about 16 inches apart over the length of the jambs (fig. 169). Folding closet doors can be installed by mounting hinges on the gypsum board at the opening with screws secured into the framing behind the gypsum board (fig. 170).

**Figure 169**—*Installation of door frame in rough opening.*

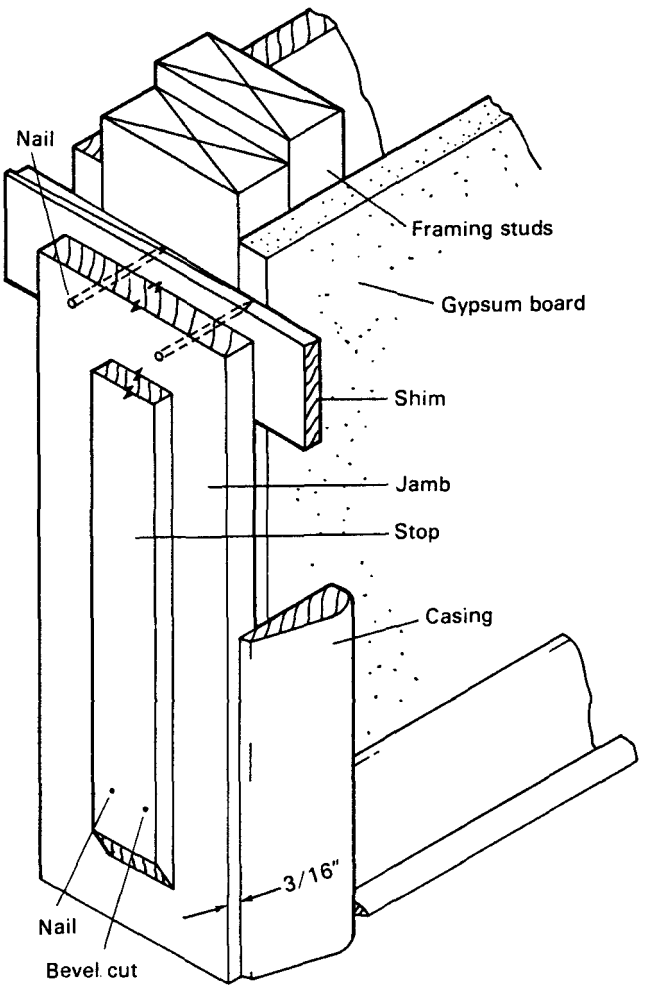
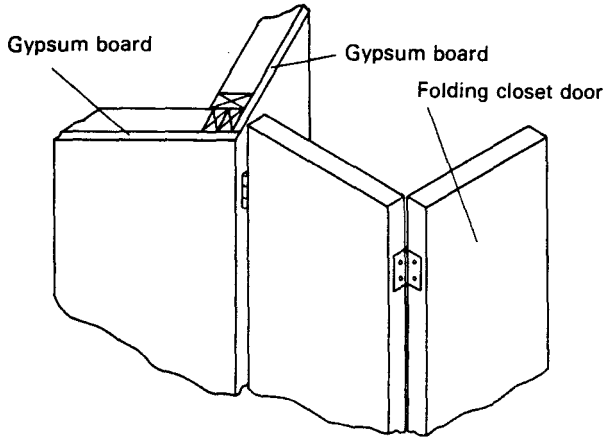
**Figure 170**–*Folding closet door mounted directly on finished wall with hinges secured to wall framing.*