DRYING EASTERN HARDWOOD LUMBER

By
JOHN M. McMILLEN
and
EUGENE M. WENGERT

Forest Products Laboratory
Forest Service
U. S. Department of Agriculture

(Maintained at Madison, Wisconsin, in cooperation with the University of Wisconsin)

AGRICULTURE HANDBOOK NO. 528

September 1978

Library of Congress Catalog No. 77-600073

McMILLEN, JOHN M. and WENGERT, EUGENE M.

1977. Drying eastern hardwood lumber. U.S. Dep. Agric., Agric. Handb. 528, 104 p.

Presents recommendations based on recent research and industry practice for drying eastern hardwood lumber, including dimension items. Accent is on comparing methods for energy-saving management decisions, but practical guidance is also given to wood drying personnel. Air drying, accelerated air drying, and kiln drying are covered.

KEYWORDS: Hardwoods, drying, air drying, kiln drying, forced-air drying, high-temperature drying, steaming, dehumidifier drying, cost accounting, energy saving, degrade reduction.

ABOUT THE AUTHORS . . .

JOHN M. McMILLEN is a forest products technologist who has specialized in the drying of wood for more than three decades at the Forest Products Laboratory.

EUGENE M. WENGERT, formerly a member of the wood drying group at the Laboratory, is now extension specialist in wood technology at Virginia Polytechnic Institute and State University, Blacksburg, Va.

For sale by the Superintendent of Documents
U.S. Government Printing Office
Washington, D.C. 20402
Stock Number 001-000-03761-7

PREFACE

Interest in broader utilization of hardwoods has been spurred by shortages of softwoods and an apparent surplus of hardwoods. However, to greatly increase use of hardwoods will require simplified drying procedures. At the same time, the better grades of hardwoods must be seasoned by methods less wasteful of both material and the energy required to dry it. These facts make this publication desirable.

The handbook is confined to eastern hardwoods because most of the hardwood timber grows in the Eastern United States. Much of the general methodology will apply to western hardwoods, but some species have special problems and some localities have severe air drying weather; western hardwood users should consult local authorities on specific questions.

Without supplanting the two existing handbooks on kiln drying and air drying lumber, this handbook combines improvements in practice with new research findings to provide savings in costs and energy. It assembles scattered technology on accelerated air drying and presents new facts and interpretations on air drying. Kiln drying information is concentrated here, and other methods of drying are discussed. An overall guide is also provided to combine various drying procedures most economically for various product requirements.

This publication should be of the greatest value to operating and managerial personnel responsible for hardwood lumber processing in hardwood mills, custom drying operations, and furniture plants. It should also help individuals dry small quantities of lumber inexpensively without sacrificing quality. Teachers and students should find this handbook helpful in career development programs.

The authors acknowledge the assistance of Val Mitchell, State Climatologist, University of Wisconsin, Madison in supplying and interpreting some of the climatological information needed for this publication. Other vital contributions were made by many Forest Service colleagues and coworkers in industry. Particular recognition goes to Walton Smith and Paul Bois for photographs, to Kenneth Compton for specific information on steaming of walnut, and to members of the U.S. Forest Products Laboratory research unit on improvements in drying technology. For all these forms of assistance, we are most grateful.

JOHN M. MCMILLEN
EUGENE M. WENGERT

Use of trade, firm, or corporation names in this publication is for the information and convenience of the reader. Such use does not constitute an official endorsement or approval of any product or service by the U.S. Department of Agriculture to the exclusion of others that may be suitable.

CONTENTS

	Page
Drying Hardwoods	1
Chapter I.—Comparison of Drying Methods for Hardwoods	2
Basic Drying Concepts	2
Methods	2
How Dry is Dry Enough	4
Literature Cited	4
Chapter 2.—Stock Preparation and Stacking	5
From Logs to Lumber	5
Sorting	7
Stacking	8
Further Warp Control	8
Literature Cited	10
Chapter 3.—Air Drying	11
Advantages and Limitations of Air Drying	12
Utilizing Air Movement	13
Other Factors Relating to Drying Rate and Defects	13
Drying Time and Final Moisture Content	19
Deterioration of Lumber While Air Drying	21
Air Drying Small Quantities of Lumber	21
A Quick Guide for Improving Air Drying Efficiency of Hardwoods	22
Literature Cited	22
Chapter 4.—Accelerated Air Drying	23
Research Basis	23
Types of Dryers and Procedures	24
Advantages and Disadvantages of Accelerated Air Drying	31
Drying Times	31
Literature Cited	33
Chapter 5.—Conventional Kiln Drying	34
Drying Procedures	36
Operational Considerations	52
Drying Times	54
Literature Cited	55
Chapter 6.—High-Temperature Drying	56
Basic Concepts	56
Research and Practice to Date	57
Drying Times and Species Potentialities	58
Apparent Process Requirements	59
Literature Cited	60
Chapter 7.—Special Predrying Treatments	61
Steaming	61
Chemical Seasoning	65
Polyethylene Glycol Process	65
Surface Treatments to Prevent Checking	66
Other Pretreatments	66
Literature Cited	67
Chapter 8.—Other Methods of Drying	68
Heated Room Drying	68
Dehumidifier Drying	68
Solar Drying	70
Press Drying	71
High-Frequency and Microwave Heating	71
Solvent Seasoning	72
Minor Special Methods	72
Literature Cited	73
Chapter 9.—Storage of Dried Lumber	74
Air-Dried Lumber	74
Kiln-Dried Lumber	74
Chapter 10.—Economics and Energy	76
Typical Costs for Various Drying Procedures	76
Degrade Costs and Causes	77
A Cost Accounting Approach	78
Energy Considerations	81
Literature Cited	83
Appendix A.—Species, Thicknesses, Drying Schedules, and Comments	84

CONTENTS (Con.)

	Page
Appendix B.—Mixed Drying of Some Species by Simplified Schedules	87
Appendix C.—Special Kiln Schedules for Special Purposes	89
Appendix D.—Lumber Names, Tree Species, Seasoning Types, and Botanical Names Mentioned in This Handbook	92
Glossary	94

Requests for copies of illustrations contained in this publication should be directed to the Forest Products Laboratory, Forest Service, U.S. Department of Agriculture, P. O. Box 5130, Madison, Wis. 53705.

LIST OF TEXT TABLES

Table	Title	Page
1	Expected average interior relative humidities and recommended moisture content values for most wood items for interior uses	4
2	Estimated time to air dry green 1- and 2-inch hardwood lumber to approximately 20 percent average moisture content	18
3	Forced-air dryer schedules for selected eastern hardwoods	27
4	Index of forced-air drying schedules	28
5	Low-temperature kiln schedules for selected eastern hardwoods	29
6	Index of low-temperature kiln schedules	30
7	Approximate Canadian low-temperature kiln schedules for 4/4 maple and birch	30
8	Suggested low-temperature kiln schedule for rough-sawed 4/4 red and white oak	30
9	Accelerated air drying times for common hardwood items in slightly heated forced-air dryers (low-temperature kilns)	32
10	Grouping species for basic kiln schedules	36
11	Alphabetical index of species and basic kiln schedule table numbers	37
12	Basic kiln schedules for red and white oak, southern lowland	38

LIST OF TEXT TABLES (Con.)

Table	Title	Page
13	Basic kiln schedules for red oak, northern or upland . . .	38
14	Basic kiln schedules for white oak, northern or upland	38
15	Basic kiln schedules for rock elm, dogwood, persimmon, and similar woods	39
16	Basic kiln schedules for American and slippery elm, holly, and black walnut	39
17	Basic kiln schedules for beech, sugar maple, and pecan	40
18	Basic kiln schedules for white ash, yellow birch cherry, sweetgum and similar woods	40
19	Basic kiln schedules for magnolia, paper birch, butternut, normal cottonwood, and similar woods . . .	41
20	Basic kiln schedules for yellow-poplar and cucumber-tree .	41
21	Basic kiln schedules for black tupelo (black gum) and sweetgum sapwood (sap gum)	42
22	Basic kiln schedules for basswood, aspen (sapwood or box lumber).	42
23	Accelerated kiln schedule for northern or upland red oak 4/4, 5/4 with a high initial moisture content (some risk of slight surface checking) . . .	45
24	Approximate kiln-drying times for 4/4 hardwood lumber in conventional internal fan kilns	54
25	Eastern hardwood species for which high-temperature kiln-drying potential has been indicated, and estimated drying time for 1-inch lumber	59
26	Amount temperature must be raised above average outdoor temperature for various equilibrium moisture content values in heated-room drying	68
27	Energy consumption and cost estimates in kiln drying hardwood lumber . .	81

Mention of a chemical in this handbook does not constitute a recommendation; only those chemicals registered by the U.S. Environmental Protection Agency may be recommended, and then only for uses as prescribed in the registration—and in the manner and at the concentration prescribed. The list of registered chemicals varies from time to time; prospective users, therefore, should get current information on registration status from Pesticides Regulation Division, Environmental Protection Agency, Washington, D.C. 20460.

DRYING HARDWOODS

Drying is a vital but sometimes troublesome procedure in the manufacturing of most hardwood products. Only after much of the moisture has been removed from wood is the material ready to be made into useful products. And drying raises problems-specially with hardwoods. During drying, degrade can occur, resulting in both loss of value and loss of valuable wood resource; considerable amounts of energy can be wasted; and mistakes can be made that will cause problems in subsequent manufacturing. Fortunately, a variety of procedures are available that satisfactorily dry hardwood lumber for shipment and ultimate use.

This report combines the information published by many public laboratories, universities, and associations, with other information developed at the Forest Products Laboratory and other units of the Forest Service, U.S. Department of Agriculture. It concentrates on the common ways of drying 1-inch through 2-inch thick lumber, free from drying defects, for the finest uses. It also suggests ways to economize on drying time, cost, and energy demands whenever hardwoods are to be used for construction or less demanding uses. It also provides a standardized method of computing drying costs.

Much general information needed for air drying and kiln drying hardwoods properly is contained in two Agriculture Handbooks: The "Dry Kiln Operator's Manual" [1] and "Air Drying of Lumber." [2] This report does not attempt to repeat all details from those volumes. Rather, it presents new information on these methods and on accelerated air drying, as well as other methods available for drying hardwoods.

---

[1] Rasmussen, Edmund F. 1961. Dry Kiln Operator's Manual. U.S. Dep. Agric., Agric. Handb. 188,197 p., illus.

[2] Rietz, Raymond C., and Rufus H. Page. 1971. Air Drying of Lumber: A Guide to Industry Practices. U.S. Dep. Agric., Agric. Handb. 402, 110 p., illus.

CHAPTER 1
COMPARISON OF DRYING METHODS FOR HARDWOODS

Basic Drying Concepts

A great deal of scientific knowledge is not necessary to dry wood. Some appreciation of the basic concepts, however, will help in the selection of drying methods and in the application of the general information on drying to specific situations.

To dry wood, three basic requirements must be met:

(1) Energy must be supplied to evaporate moisture throughout the drying process. As the wood becomes drier, additional energy is needed to release moisture from the hydroscopic forces that bind some of the water to the wood. Very green wood with large amounts of free water requires 580 calories per gram of water evaporated. Below 30 percent moisture content, more energy is required (fig. 1). Energy also is required to raise the temperature of the wood to increase the rate of moisture movement from the interior to the surface and to increase the rate of evaporation.

(2) The environment adjacent to the wood must be capable of receiving moisture from the wood's surface. In air and kiln drying, the relative humidity must be below 100 percent. The lower the relative humidity, the faster the drying. (But relative humidity must not be so low as to cause degrade.)

(3) Air movement through a stack of lumber must be adequate to bring heat energy in, to remove evaporated moisture, and to maintain desired relative humidities within the stack. The relative humidity within a stack of drying lumber tends to rise above the general relative humidity in the drying yard or kiln. Thus the inside of the stack tends to dry slower than the outside.

These three factors can be manipulated to control the drying process, minimizing defects while drying the wood as rapidly as possible. See Dry Kiln Operator's Manual and Air Drying of Lumber for more information on wood properties, the drying process, causes of drying defects, and the methods of avoiding them. More highly technical information is given in other references (Brown et al 1952, McMillen 1969, Siau 1971, and Stamm 1964).

Methods

A number of methods are available for drying hardwood lumber, ranging from air and kiln drying to special seasoning processes. The customary method in the United States, except in the northernmost States, has been to air dry the lumber to 20 percent moisture content, then kiln dry it as much as needed. If lumber is in short supply, more lumber is kiln dried from the partly air dry or green condition. Kiln drying from the green condition has been common where air drying conditions are poor most of the year.

During years of adequate energy and wood supplies, the shortest air drying time and the best target moisture contents for air dried lumber were not well defined. Today these are much more important; the combination of air drying and kiln drying probably is the best energy-conserving method for drying better quality hardwood lumber in most of the United States. A later chapter on air-drying contains a map of the average number of months of good air-drying weather available in various regions, and a table of air-drying times by species and thicknesses in these regions.

In regions where good air-drying weather prevails only 4 to 6 months of the year, consideration should be given to accelerated air drying procedures. These have good promise for reducing lumber inventories and bringing lumber production closer to the market. They also permit quality drying of hardwoods with character marks, or minor natural defects. The chapter on this subject includes a discussion of the several types of equipment avail-

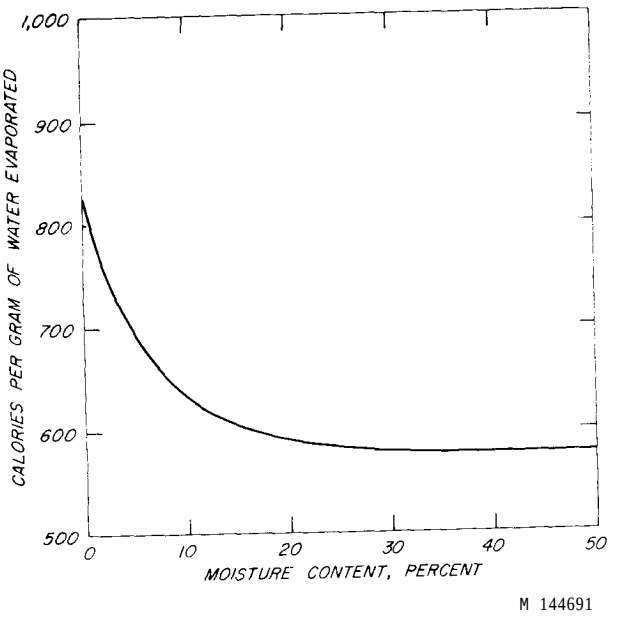

Figure 1.—Energy required in drying of wood as wood moisture content changes (after Skaar and Simpson 1968).

able, the schedules recently perfected for a variety of Appalachian hardwoods at the Forest Products Marketing Laboratory,[3] and a table of drying times for common hardwood items in slightly heated forced-air dryers.

Very small quantities of hardwood lumber can be air dried and then stored in a slightly heated or dehumidified room to bring moisture content low enough for furniture and other indoor uses. If fully air dried, such small quantities can be kiln dried with almost any other species of hardwood in a commercial kiln, if a person can find a custom kiln drying firm that will accept them.

Drying hardwood lumber in a conventional kiln has several advantages. Modern conventional kilns have been designed to accelerate drying greatly by using temperatures from 100° to 180° F with air velocities from 200 to 600 feet per minute through the load. Under these conditions, a schedule of relative humidities high enough to prevent drying defects can be maintained in reasonably tight site-constructed or prefabricated buildings.

One advantage of kiln drying is the ability to achieve a low, uniform final moisture content. Another is to relieve drying stresses (case-hardening). Relief of drying stresses is necessary to prevent warp if more wood is planed off of one side of a board than the other, or if the wood is to be resawed or machined deeply from one side. Uniformity of moisture content and relief of drying stresses are especially important to large-scale operations that produce hardwood dimension cuttings from small trees. If the stock is not properly equalized and conditioned, warpage and poor joints occur when the cuttings are glued into panels.

While high-temperature drying (above 212° F) is commonly used for softwoods, it has generally been considered inapplicable to most hardwoods. However, recent research and industrial applications indicate more optimistic prospects for this time- and energy-saving method. Drying time may be only one-fourth the time required for conventional kiln drying. There are two reasons why energy is saved: (1) The vents are kept closed and (2) the shortened drying time greatly reduces heat loss through the structure and floor. Slight discoloration may bar high-temperature-dried wood from some uses. The method, however, may be fully satisfactory for drying yellow-poplar and other easily dried woods for concealed uses and for drying similar hardwoods for construction purposes.

Besides major information on the above drying processes, this handbook covers special predrying treatments that reduce defects when drying especially refractory or defect-prone woods, a number of other drying methods, the proper storage of dried lumber, and economic and energy considerations. Predrying treatments include steaming for color promotion or drying rate acceleration, and treatment with the hydroscopic and bulking chemical (polyethylene glycol) for defect reduction. Also included are wax, sodium alginate, or salt-paste surface treatment for the prevention of surface checks.

A cardinal rule in drying hardwoods is to reduce the material to the smallest practical size before starting to dry it. Drying time is more than doubled if thickness is doubled. Therefore, it would be better, from the drying standpoint, to make 2-, 3-, and 4-inch material by gluing together the required number of pieces of dry 1-inch material. This is one of the

[3] Northeastern Forest Experiment Station, Forest Service, U.S. Department of Agriculture, located at Princeton, W. Va.

considerations that makes press drying so promising among the special drying methods. Other methods discussed are dehumidifier drying, solar drying, high-frequency and microwave drying, and solvent seasoning. None of these appear likely to replace air and kiln drying for the majority of hardwood drying operations but they do have possibilities for some purposes.

Table 1. —*Expected interior relative humidities and recommended moisture content values for most wood items for interior* uses *in the United States* [1]

Are as	Relative humidity		Wood moisture content	
	Average	Range	Average	Range
	Percent	*Percent*	*Percent*	*Percent*
Much of United States	40	30-55	8	6-10
Dry Southwest [2]	30	15-50	6	4-9
Damp, warm coastal	60	40-70	11	8-13

[1] From Wood Handbook, 1974.
[2] Also applies to areas where interior environment is dry year around.

How Dry is Dry Enough?

In the many decades of dealing with the use of wood, the U.S. Forest Products Laboratory has noted that problems often arise when the wood is not dry enough. Too high a moisture content can bring about difficulties in drying, manufacturing, and use. Today, with tighter construction in homes, with heated manufacturing plants, and with year-around climate control in offices, the in-use moisture content of wood products is quite low, lower even than in the 1950's and before. To avoid shrinkage, warping, checking, and splitting in the finished product, lumber must be dried to a final moisture content (after conditioning) close to the middle of the range of expected in-use moisture contents (table 1).

Furthermore, dried wood must be stored, manufactured, and warehoused at or near the expected moisture content values. Failure to dry wood low enough and then keep it this low as it gets into use may result later in open glue joints, checking and splitting, finishing imperfections, and warping. And these all decrease profits and waste this natural resource.

The moisture content for special uses may be higher; if so, stringent storage precautions generally are not required. Wood to be bent or used in boats should be somewhere between 15 and 20 percent moisture content. After bending, wood for interior uses should be brought down to the moisture levels indicated above. Wood to be used as framing or supports in construction should be in the 10 to 19 percent moisture content range. Wood to be treated with preservatives before use should be between 20 and 35 percent moisture content.

Literature Cited

Brown, H. P., A. J. Panshin, and C. C. Forsaith
1952. Textbook of wood technology. Vol. II, McGraw-Hill, New York. 783 p.

McMillen, J. M.
1969. Accelerated kiln drying of presurfaced 1-inch northern red oak. USDA For. Serv. Res. Pap. FPL 122. For. Prod. Lab., Madison, Wis.

Rasmussen, E. F.
1961. Dry kiln operator's manual. U.S. Dep. Agric., Agric. Handb. 188. 197 p., illus.

Rietz, R. C. and R. H. Page
1971. Air drying of lumber: A guide to industry practices. U.S. Dep. Agric., Agric. Handb. 402. 110 p., illus.

Siau, J. F.
1971. Flow in wood. Syracuse Wood Science Series. Syracuse Univ. Press. 131 p.

Stamm, A. J.
1964. Wood and cellulose science. Ronald Press, New York. 549 p.

U.S. Forest Products Laboratory, Forest Service
1974. Wood handbook. U.S. Dep. Agric., Agric. Handb. 72, rev. 421 p., illus.

CHAPTER 2
STOCK PREPARATION AND STACKING

Before actual drying operations begin, a number of steps are important in reducing warp and avoiding other seasoning defects. Unless great care is exercised in early phases of the seasoning process, subsequent drying steps may be ineffective in reducing degrade and costs. The precautions start with the logs. Major points are discussed here, but others are included in later sections where they are specifically appropriate.

From Logs to Lumber

Log Protection

Logs should be taken from the woods and sawed into lumber as soon as possible, particularly during warm weather. At a small sawmill where only a few logs are accumulated, no other precautions are needed. At larger sawmills, a considerable supply of logs is often kept on hand, and some precautions should be taken to protect against deterioration.

Logs that have been piled without protection may end check and be attacked by fungi and insects, especially during warm weather when higher temperatures speed up drying and fungus and insect activity. Spraying with cold water to keep the logs wet, especially during warm dry weather, will reduce end checking, splitting, staining, and decay. Continuous spraying is the most beneficial, so spray equipment should be as clog-free as possible. One type is illustrated in figure 2. Chemical sprays effective against fungi and insects also are available.

Protection of Green Lumber

It is important that lumber be protected from the time it leaves the sawmill until it can be transported to the seasoning site. Unless the weather is cold, freshly sawed lumber may be attacked by fungi and insects, and is susceptible to checking and splitting if exposed to direct sunshine. Dipping the green lumber in a solution of toxic chemicals can protect it against attack by fungi or insects. Prompt piling of the lumber for air drying also makes attack by fungi and some types of insects less probable. Protection against sticker stain, interior graying, and other oxidative discoloration also begins with the green lumber (McMillen 1976).

Protection against insects is accomplished along with dipping or spraying to prevent blue stain, the most common fungal hazard. Principal chemicals used in the past included mercurial and chlorinated phenols but environmental considerations have been changing the picture. Check with your County Agricultural Agent or State Agricultural Experiment Station for approved chemicals. Manufacturers will supply directions for use. Treatment is imperative during most months in the South and has been found beneficial during the warmer months in many Northern States. A general recommendation is to consider dipping during any period of a week or more when a daily mean temperature of 60° F or over is expected.

Dipping lumber to prevent fungus attack does not protect it against oxidative discoloration; in fact, the excessive moisture left on the wood may promote discoloration under some circumstances. The best preventative is to rapidly dry the surface moisture. Oxidation stain can be minimized in hardwood lumber by keeping the wood in the strictly green state until rapid drying can be started, but bulk storage should not be prolonged. If green or excessively wet sapwood lumber has been held more than 2 weeks before stacking, fast dry the lumber surfaces before regular air drying is started. Such fast drying can be accomplished by 1 day of accelerated air drying or 3 days of very openly spaced yard drying. If dried with mixed loads of sapwood and

M 144 876

Figure 2.—Water spraying equipment used effectively on decked logs.

heartwood, or if the sapwood boards have heartwood on one face, the heartwood should be observed frequently so that slower drying can be started as soon as minor checks appear.

One mistake in handling green lumber is to sticker it and then hold it in closely spaced stacks on a temporary storage yard under the assumption that it will be properly piled or kiln dried "soon." Damage from discoloration, stain, or even decay can be very costly, even with dipped lumber, if this storage is inadvertently prolonged. Spacing equal to that recommended for air drying is advisable during such storage.

Preventing Surface Checks and End Checks

Surface checks can start during exposure of 2-inch heartwood of any hardwood or l-inch heartwood of oak, hickory, and beech [4] to direct sunlight or strong winds during hot or dry weather. Basically, the surface of the material is drying much faster than the interior. The material can be protected from direct sunshine by a roof. This might be over the area used to sort and accumulate the freshly sawed lumber, or even a temporary roof on any pile that will be exposed an hour or more.

Research has shown that presurfacing lumber to remove all fine saw marks reduces surface checking in oak (McMillen 1969; Rietz and Jenson 1966; Simpson and Baltes 1972; Wengert and Baltes 1971). Although some field trials have been successful (Cuppett and Craft 1972, Rice 1971) industrial adoption will depend upon economic considerations. Presently, surface checking in oak and other refractory woods can be economically controlled by other precautions described later. Surfacing to a uniform thickness, when the lumber has not been precisely sawed, is beneficial in control of warp, a major cause of degrade.

Certainly another of the most common forms of degrade is end checks. In uncoated thick stock, end checks that are not even hair-

[4] Wood species are generally listed in this handbook by their common names. But, because different names are so often used for the same species, both common and botanical names are included in Appendix D.

line cracks on air-dried material can extend 12 inches or more from the end of the piece. This emphasizes the importance of end coatings.

Many hardwood manufacturing operations routinely trim 3 to 10 inches off the ends of every board. This is a 6 to 20 percent loss of lumber for 100-inch lengths!

Almost 6/4 and thicker hardwood stock would benefit from end coating. Two-inch and larger squares usually are end coated, and gunstock blanks must be coated.

End coatings may be divided into two classes: Cold coatings are liquid at ordinary temperatures and can be applied without being heated; and hot coatings are solid at ordinary temperatures and must be applied hot. Cold coatings can be applied readily to logs and lumber. Special end coatings of the cold-coating class are available from manufacturers and from dry kiln companies. Cold coatings are usauly applied by brush, although they can be sprayed with proper equipment. For small-scale use, heavy pastes such as roofing cement can be used. Sprayable wax emulsions, which have been very effective on redwood lumber, gennerally do not provide sufficient protection on thick hardwoods.

Hot coatings (pitch, asphalt, and paraffin) are well suited for small stock that can be easily handled. They are low in cost and high in water resistance when applied in a single coat. Hot coatings are generally applied by dipping, but they also can be applied by holding the lumber end against a roller that is rotated while partly submerged in the coating. Paraffin is a material with a low softening point; it is suitable only for air drying- or for temporary protection of the ends of squares that will be kiln dried by a kiln schedule that uses a high relative humidity during the first stages.

Some specialty items, such as walnut gunstock blanks, require a highly water-resistant coating with a high softening point. Without a good coating, end checks can extend themselves through the length of the piece as honeycomb.

End coatings should be applied as soon as possible to freshly cut end surfaces; end coatings applied after checking has begun usually do not prevent deepening of the checks. Cold coatings should be allowed to dry a few hours before being subjected to kiln temperatures.

Sorting

From the standpoint of stacking and control of warping, hardwood lumber *must be* sorted by individual nominal thicknesses. Sorting by length and width also simplifies piling. Sorting on the basis of species also tends to increase the efficiency of the drying operation, because species differ in their drying characteristics. A further sorting on the basis of heartwood and sapwood would contribute to drying efficiency within some individual species. Further discussion of the most common sorting practices is contained in Air Drying of Lumber.

In the North, where the number of species is small and the value of each species may be high, sorting by individual species is the rule. In the South, especially when removing hardwoods from sites where pine is desired, it may be expedient to combine species that can be kiln dried together. However, hickory–pecan, red oak, and white oak should be handled individually and southern lowland oaks should be separated from upland oaks.

Sorting for quality has long been practiced with some species, but there are new scientific findings explaining the quality differences and why low quality material presents drying problems. So-called mineral streak or mineral portions of sugar maple are now known to be wound-induced discolorations (Shigo 1965). Such material is very low in permeability, greatly hindering water removal. Some wood of the oaks, aspen, cottonwood, and several other hardwood species have streaks of wood infected with bacteria (Ward et al 1972; Sachs, Ward, and Kinney 1974). Efforts should be made to recognize these abnormal types of wood. When they are present in large quantity, they should be sorted out so that special kiln schedule and moisture monitoring measures can be applied.

Stacking

The importance of proper stacking cannot be overemphasized. Sloppiness at this point cannot be compensated for later on. The major purposes of stacking lumber in a specified manner are twofold: (1) To promote uniform air circulation, which in turn results in good drying; and (2) to reduce or eliminate warp.

Hardwood lumber is most typically piled for drying in packages with horizontal layers, using stickers as spacers between each layer (fig. 3). If the lumber is first end racked, end piled, or cribbed for rapid surface drying, it should. be repiled in flat piles within 3 or 4 days. Degrade from warp can be very costly if the stock is end racked or cribbed very long.

The length of the lumber package is usually the same as the length of the lumber being cut. When several sizes are being sawn, several different package lengths may be used. Sometimes 6-, 10-, and 12-foot lengths are put in one sorted-length pile and 8-, 14-, and 16-foot lengths in another. The shortest pieces are piled end to end and the intermediate-length pieces all pulled to one end. Hardwoods sawed in both odd and even lengths should be box piled (fig. 4). In either method, it is important to have full-length pieces on the outer edges of each layer and full support under each end of each board.

Width of the pile is frequently governed by the requirements of the dry kiln or forced-air dryer. For most modern kilns with air velocity through the load of 200 feet per minute or more, the most common package width is 48 inches. However, in air drying, and in older kilns with low air velocity and insufficient venting, less air is moving. Thus, the narrower the pile, the faster the wood will dry. Hand-stacked piles should not exceed 6 feet wide unless they are provided with vertical flues. See chapter 3 for more comments on pile construction.

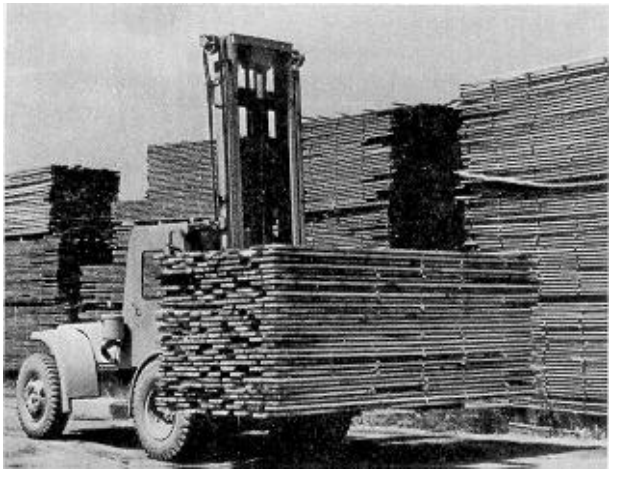

M 135 021

Figure 3.—Stacking stickered package of lumber.

Hardwood lumber stacking should aim for square, level, and straight-sided piles with all stickers and bolsters in perfect alinement. Acceptable piles are the rule with machine stacking, which is widely used in medium- and large-sized hardwood mills and concentration yards. It is also possible to meet quality specifications with hand stacking if sticker guides are used with proper care.

Further Warp Control

In addition to perfect, vertical alinement of the stickers, good bolster placement, and good pile roofs, several other considerations help in reducing degrade, particularly warp:

1. Basic warp control can be obtained through proper sawing procedures, especially for small logs. Saw especially warp-prone material, such as city-grown elm, into wide boards.

2. Presurfacing lumber (planing both faces) or blanking (one face) to a uniform thickness before stacking increases the usable volume of a unit package and reduces the amount of warp. Precision sawing to a uniform thickness also will reduce warp.

3. The foundation, kiln floor, or kiln trucks must provide a firm, flat bearing surface for the lumber pile. A crooked or uneven surface will cause twist, bow, or kink in the lumber during drying.

4. Properly sized and placed stickers are highly important, with uniform thickness a prime requirement. Broken or distorted

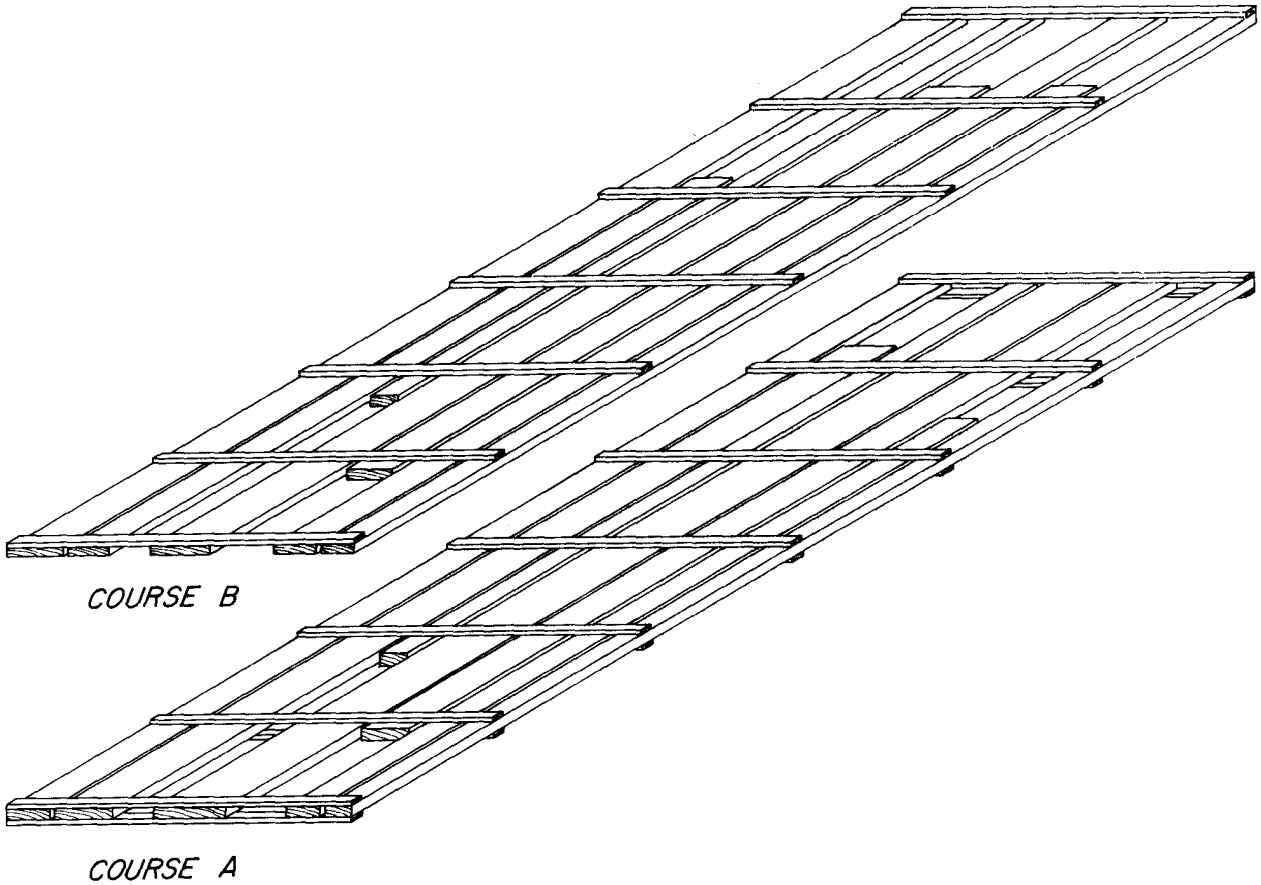

M 144695

Figure 4.—Method of box piling for random-length lumber.

stickers can increase warp and should be repaired or discarded.

5. Sticker spacings of 16 to 24 inches are satisfactory for many hardwoods, provided all tiers of stickers are fully supported and their alinement is perfectly vertical. Very valuable lumber or especially warp-prone material may benefit from spacing as close as 12 inches.

6. Several drying firms restrain the tops of the loads by spring clamps anchored lower in the pile, or by added weight, Research showed a load of 50 pounds per square foot was adequate for aspen 2 by 4's dried by high temperature. More dense woods probably would require more pressure. Research on 1-inch blackgum, for instance, showed 150 pounds per square foot more effective than 90 pounds per square foot in reducing cupping. Two types of hold-down clamps for restraint of warp are shown in Air Drying of Lumber. If difficulty is experienced in locating sources of hold-downs, the utilization specialists in state forestry or forestry extension offices may be able to help.

7. Rapid natural air drying or equivalent accelerated air drying may be a necessary first step in drying warp-prone woods such as American elm. Such methods tend to develop a large amount of tension set in the outer shell, which helps to hold the lumber flat in later stages of drying (McMillen 1963). When kiln drying lumber green from the saw, use schedule modifications that provide initial conditions of lower temperature and lower relative humidity than those generally recommended.

Most of these procedures will require the operator to spend some money to implement them. However, as the value of high-quality lumber rises and quantities lessen, the cost-benefits may justify employing these methods.

Literature Cited

Cuppett, D. G. and E. P. Craft
1972. Kiln drying of presurfaced 4/4 Appalachian oak. For. Prod. J. 22(6):86.

McMillen, J. M.
1963. Stresses in wood during drying. U.S. For. Prod. Lab. Rep. 1652. For. Prod. Lab., Madison, Wis.

McMillen, J. M.
1969. Accelerated kiln drying of presurfaced 1-inch northern red oak. USDA For. Serv. Res. Pap. FPL 122. For. Prod. Lab., Madison, Wis.

McMillen, J. M.
1976. Control of reddish brown coloration in drying maple sapwood. USDA For. Serv. Res. Note FPL-0231. For. Prod. Lab., Madison, Wis.

Rasmussen, E. F.
1961. Dry kiln operator's manual. U.S. Dep. Agric., Agric. Handb. 188. 197 p., illus.

Rice, W. W.
1971. Field test of a schedule for accelerated kiln drying of presurfaced 1-in. northern red oak. Mass. Agric. Exp. Stn. Res. Bull. No. 595.

Rietz, R. C. and J. A. Jenson
1966. Presurfacing green oak lumber to reduce surface checking. U.S. For. Serv. Res. Note FPL-0146. For. Prod. Lab., Madison, Wis.

Rietz, R. C. and R. H. Page
1971. Air drying of lumber: A guide to industry practice. U.S. Dep. Agric., Agric. Handb. 402, 110 p., illus.

Sachs, I. B., J. C. Ward, and R. E. Kinney
1974. Scanning electron microscopy of bacterial wetwood and normal heartwood in poplar trees. Proc. Workshop Scanning Electron Microscopy and the Plant Sciences. IIT, Chicago.

Shigo, A. L.
1965. The pattern of decays and discolorations in northern hardwoods. Phytopath. 55(6):648-652.

Simpson, W. T. and R. C. Baltes
1972. Accelerating oak air drying by presurfacing. USDA For. Serv. Res. Note FPL-0223, For. Prod. Lab., Madison, Wis.

Ward, J. C., R. A. Hann, R. C. Baltes, and E. H. Bulgrin
1972. Honeycomb and ring failure in bacterially infected red oak lumber after kiln drying. USDA For. Serv. Res. Pap. FPL 165. For. Prod. Lab., Madison, Wis.

Wengert, E. M. and R. C. Baltes
1971. Accelerating oak drying by presurfacing, accelerated schedules, and kiln automation. USDA For. Serv. Res. Note FPL-0214, For. Prod. Lab., Madison, Wis.

CHAPTER 3
AIR DRYING

Where annual mean temperatures are not too low and space for a drying yard is not too limited, air drying is the most economical and energy-conserving method to get most of the water out of hardwoods. To achieve that end, however, keep in mind a thought that is best stated colloquially: "Wood can't help drying, if you help it!"

The green moisture content of U.S. hardwoods ranges from 45 to 160 percent, on the ovendry basis. The moisture above 30 percent is present as water or water vapor in the wood cell lumens (cell cavities) and is called "free water." This water comes out of the wood very readily in air drying. The rest of the water, in the wood-cell walls, is called "bound water." It comes out more slowly, particularly as the moisture content decreases below 25 percent.

In the past, the moisture content goal for air-dried lumber was 20 percent. One reason was to reduce the chance that mold, stain, or decay would develop during transit, storage, or use of the wood. Another was to reduce the amount of shrinkage that would occur if the wood were used for an exterior purpose without further drying. Time to air dry to an absolute 20 percent moisture content is unduly long, however, in some regions at some times in the year. This is especially true for stock thicker than 4/4 (1 inch).

Under proper air drying procedures, the surface zone will be at or below 20 percent moisture content when the average is 25 percent. There are no substantial difficulties in kiln drying air-dried stock at this moisture level. This handbook, therefore, recommends terminating the air drying of stock that is to be subsequently kiln dried at the 25 percent average moisture content level whenever it is advantageous economically. Items to be treated with preservatives also should stop air drying at this level.

On the other hand, lumber to be bent to form, used for outdoor furniture, or used in constructing unheated barns and garages should be air dried to 20 pereent or slightly below. Wood to be bent in a hot press or machined for trim and flooring in boats and buildings that are heated only occasionally should be dried to a lower moisture content (12 to 18 percent). This level can be obtained by prolonged air drying in a shelter. Material for ultimate interior use in heated or dehumidified rooms should, of course, be dried further, in a kiln or by heated-room drying.

The general principles of air drying are reasonably well understood. Their proper application can make this method of reducing moisture content more efficient and profitable. During good air drying weather, slight deviation from best practices is tolerable without incurring serious degrade losses or retardation of drying rate. Three or more days of greatly abnormal weather, however, can be devastating. High humidity, heavy rain, and fog can cause discoloration; strong winds in combination with low relative humidity can cause severe checking. Therefore, it is important to adhere to good practice year around, irrespective of normal weather conditions. With such practices, degrade can be limited to 1 or 2 percent of the lumber value.

The Air Drying of Lumber gives a complete discussion of drying practices. Several points are expanded in this handbook, however, to emphasize the assumption that faster drying and conserving more energy and resources now are paramount in air drying. Some of these points involve promotion of practices known to be helpful but not commonly used because they add some cost.

Advantages and Limitations of Air Drying

One real advantage of air-drying lumber over drying by other processes is its low initial cost. Although there are substantial land, installation, and operating costs for air drying, the cost of kiln-drying dense hardwoods to the moisture content levels achieved in air drying could be prohibitively high. However, as the value of the wood increases, kiln-drying species like beech, birch, and maple green from the saw becomes more feasible. This is especially so in regions having fewer than 6 months of good air-drying weather.

A second real advantage is substantial energy saving. Each percent moisture removed by air drying saves energy in subsequent kiln drying by roughly 50 to 85 British thermal units per board foot. For a conventional kiln with a capacity of 50,000 board feet, this means 2.5 to 4.25 million British thermal units can be saved for each 1 percent moisture lost in air drying. At late 1974 prices, this amounted to $3.75 to $6.38 (Wengert 1974).

The air-drying process offers the producer or large-scale user a means of carrying an inventory of various species, grades, and sizes of lumber. To meet shipping schedules during periods of the year when the sawmill cannot be operated to capacity, the yard inventory is built up when sawing conditions are favorable, and the lumber is air dried while being held. Air drying also reduces weight and shipping costs. Any degree of drying that can be achieved, even during short periods of accumulation, is helpful. A variety of drying processes are available at the destination to accommodate partly air-dried stock. Some hazard of oxidative discoloration, however, may still exist for white sapwood species partially dried and then bulk-piled for shipment.

In combination with properly applied antistain dip treatments,[5] air drying decreases the chance that mold, stain, and decay will cause degrade, as they could during bulk-piled storage and shipment. Rapid air drying at low relative humidities produces a large amount of set that assists in reducing warp. If the stock is properly stacked and protected in a well-laid-out yard, minimum degrade from checking will be apparent, even for thick stock of dense woods and 1-inch heartwood of especially refractory woods.

Limitations of air drying are generally associated with the weather and the uncontrollable nature of the process. Production schedules are at the mercies of changing climatic conditions—temperature, relative humidity, rainfall, sunshine, and winds. Drying generally is very slow during the cold winter months in the northern regions of the country. But mean annual values for the various factors are fairly consistent within any one region from year to year, so general production schedules and plans can be worked out. Specific technical information and good judgment are needed, however, to complete detailed planning.

Lack of absolute control of drying conditions poses some hazards of excessive degrade. Unusually fast drying of the surface, caused by sun or wind and low relative humidity, can cause surface checking of beech within a day, even in the winter in the North. In other times and areas, brief periods of hot, dry winds may increase degrade and volume loss due to severe surface checking and end splitting. Warm, rainy, or sultry periods, with little air movement, encourage the growth of blue stain and aggravate chemical (oxidation) stain and can cause excessive losses unless proper dipping, pile spacing, and piling methods are used.

An excessively large inventory is very costly, especially when interest rates are very high. Substantial deterioration of the lumber can occur if air drying is prolonged beyond the time needed to bring the moisture content down to 18 percent or less. If poor market conditions result in the holding time going beyond 2 years, extra measures against deterioration may be advisable.

[5] Check with your County Agricultural Agent or State Agricultural Experiment Station for approved recommendations.

Utilizing Air Movement

Air circulation is so important that it is considered broadly here as well as in detail later in yard layout, foundations, and piling. Air circulation is a principal means of bringing into the air-drying yard or shed the heat needed to evaporate water. Air circulation also brings heat into the lumber piles as well as being itself a factor in drying. It is involved in removing moisture-laden air from the pile and from the drying area.

Because air must move into and through the drying area, yard layout is very important. Adequate alleys and spaces must be provided between rows and piles. By custom in the United States, the "main" alleys for the transport of lumber to the piles are perpendicular to the prevailing wind direction. However, recent research showed that, for some types of yards, better circulation is obtained by having the main alleys parallel the prevailing wind direction. Whatever such refinements, the air spaces must be adequately large and straight and continuous across the yard. If these principles are observed, air flow will be adequate through the yard whenever there is wind, regardless of which direction the piles face.

Except for those piles exposed directly to the wind, with their orientation perpendicular to the wind direction, no wind blows through any pile on an air-drying yard. Rather, all air flow across the boards is due to small air pressure differences from eddy and aspiration effects and to air density differences. As the water evaporates, the air is cooled in and around all piles. Cooling makes the air denser, and it tends to flow downward. When the cool dense air is removed from beneath the piles, fresh air is brought into their tops. This effect and the consequent drying go on continuously, regardless of wind, unless the air around all the boards is saturated with water vapor. This is the reason why, from the fast, economical drying viewpoint, high and open pile foundations are very important.

One precaution should be stated about the location of thick or especially check-susceptible material in the yard and the manner in which the yard is filled up. Such material should not be located on the windward side of the yard. Lower air velocities and increased relative humidities in the central or leeward areas of the yard modify the severity of drying conditions and reduce the likelihood of checking. During severe weather, however, it would be bad practice to start refilling an empty yard from the leeward side toward the windward side, because each pile in turn would be exposed directly to the wind.

Other Factors Relating to Drying Rate and Defects

The rate at which green lumber will dry after it is placed in the air-drying yard depends upon factors that involve the wood itself, the yard, the pile, and other climatic conditions as well as wind.

Wood

Species

Some lightweight hardwoods (basswood, willow, yellow-poplar) dry rapidly under favorable air-drying conditions. The heavier hardwoods require longer drying periods. Specific gravity, then, is a physical property of wood that can guide estimations of drying rates or overall drying time. But beech and sugar maple will dry faster in northern yards than will northern red oak, even though all have the same specific gravity. The difference between them is related to the permeability of the wood and the diffusivity of the water in it. Much of this difference is due to differences in the proportion of sapwood and heartwood. Beech and maple are almost all sapwood; oak is almost all heartwood. The fibrous parts of the oak heartwood, making up most of its structure, are low in permeability and diffusivity.

Generalized estimates of air drying time by species are given later in this chapter. It must be recognized, however, that some woods are handled commercially in groups of species, and there are differences between species in the groups. Pecan, for instance, is regularly made up of sweet pecan *(Carya illinoensis),* water hickory which is often called bitter pecan *(C. aquatica),* and one other minor

Carya species (see Appendix D). The sapwood and heartwood of sweet pecan and the sapwood of bitter pecan dry very rapidly, but the heartwood of bitter pecan dries very slowly.

A similar situation exists with the tupelos. The heartwood and sapwood of black tupelo, usually called blackgum *(Nyssa silvatica)* and the sapwood of swamp tupelo *(N. silvatica* var. *biflora)* and water tupelo *(N. aquatica)* dry rapidly, but the heartwood of water tupelo usually dries slowly. The heartwood of swamp tupelo is intermediate in drying characteristics.

Red oak is made up of several species of *Quercus* and white oak of another group of *Quercus* species. Southern lowland oaks, both white and red, have drying characteristics similar to each other but different from those of the upland oaks. They are, therefore, separated in drying time and kiln schedule tables. Anyone drying the woods specifically mentioned and experiencing unduly long drying periods should consult a county or State utilization and marketing forester to see if some practical means of sorting the types could be derived.

Grain Patterns

Quartersawed lumber dries more slowly than flatsawed lumber. In quartersawed lumber, few wood rays—which aid the movement of moisture—are exposed on the broad surfaces of the boards. Flatsawed lumber, which has more rays exposed, is more likely to surface check than quartersawed lumber under severe drying conditions.

Thickness

Thick stock naturally takes longer to dry than thin material. One theoretical approach suggests that drying time, under identical or similar drying conditions, is a function of the square of the thickness. In actual kiln drying, the effect of thickness is slightly less. Since thick stock takes longer than one air-drying season to reach 25 percent moisture content in the central and northern parts of the United States, actual air-drying times for 2-inch stock are three to four times as long as those for 1-inch. Also, the greater the thickness, the greater the tendency for hardwoods to surface check and end check.

Yard

Site

An efficient yard for rapid air drying should be on high, well-drained ground with no obstruction to prevailing winds. One southeastern furniture firm made considerable savings by building a new 12-acre yard on a hill 3 miles away from three old, overcrowded, and inefficient yards near their plants (Minter 1961). The savings included a 45-percent labor reduction, faster drying, and a decrease in total inventory of 2 million board feet.

Layout

Alley orientation and size, row and pile spacing, and pile size for both hand-built pile and forklift yards are discussed extensively in Air Drying of Lumber, The general function of alleys and pile spaces in removing moisture-laden air from the yard has been well known. The effect of wind-induced circulation within the piles, however, was not understood until wind tunnel-miniature model pile studies were made using forklift layouts.

White (1963) used two orientations of a single block of row-type model piles. Artificial smoke was used to indicate the relative amount and direction of air movement. When the piles were oriented perpendicular to the wind, much of the air was deflected over the top of the block. No wind blew directly through any pile except those right on the windward side. Some of the air that flowed between the other piles, however, entered these piles from the rear and left from their fronts, sides, and tops. Double eddies at the rear of each pile moved air up into the turbulent area above the piles. When the piles were oriented parallel with the wind, more air moved through the spaces between the piles and into and out of the piles.

Finighan and Liversidge (1972) used eight different layouts. Two were single large blocks of row-type yards; the others were line-type yard variations. The evaporation rate of a solid plug of moth crystals (paradichlorbenzene) located in each model pile simulated its rate of drying. The rates in all the line-type layouts were 20 to 40 percent greater than in the row-type layouts. These differences probably would have been less if a greater amount of “open space” had been

used in the row-type layouts. The greatest amount of "drying" took place in the line-type layouts with the greatest amount of open space-double lines of piles with 25-foot alleys. The best combination of good average "drying" rate and good uniformity throughout the layout occurred when the model piles and the main alleys were oriented parallel with the wind.

For those species and sizes that may be dried as rapidly as possible, without danger of loss from splitting and checking, the line-type layout parallel with the prevailing wind appears to be best. For species such as oak that are subject to checking, the row-type layout may be required. The length of rows and the number of rows should be limited, however. If the row-type layout is used and if there are problems of getting lumber of all piles uniformly dry for shipment or kiln drying in the shortest possible time, variable or nonuniform (using movable pile foundations) pile spacing in each row should be tried (McMillen 1964). Such nonuniform spacing has been widely used for redwood, one of the softwoods. In this method, the spacing between piles in the middle of the row is about double the spacing between the piles near the alleys.

Whatever yard layout style is used, the main and cross alleys and the spaces between piles should be perfectly alined all the way across the yard, and free of all obstructions.

Surface

The drying efficiency of a yard depends to some extent on how well the surface is graded, paved, and drained. If water stands in a yard after a rain, it will decrease the drying rate. The yard described by Minter (1961) was surfaced to a 6-inch depth with crushed rock. Blacktop paving also is used extensively. The yard should also be kept clean. Vegetation and debris, including broken stickers, boards, or pieces of timber from pile foundations, interfere with the movement of air over the ground surface.

Piles

Piling Methods

The drying rate of lumber is affected by the way the boards are stacked. For instance, lumber dries faster when air spaces are left between the boards of a unit package than when the boards are placed edge to edge. The air spaces permit greater downward flow of air within the piles. This is important when the outside air is calm or nearly so. Boards in unit packages 4 feet or less in width are usually stacked edge to edge, and the downward flow occurs in the spaces between the piles. Minimum pile spacing is 2 feet. If the unit packages are wider than 4 feet, the boards in each course should be spaced. When random-length, random-width lumber is box-piled, enough space develops within the pile to make additional board spacing unnecessary. Wide unit packages of even-length lumber and wide hand-stacked piles are often built with flues or central chimneys.

Pile Foundations

High openly designed pile foundations are necessary to allow the moist air to pass out readily from beneath the pile. They also are a significant factor in obtaining uniform drying from the top to bottom of each pile. Finighan and Liversidge (1972) found that the evaporative loss from top packages from wind effects always was greater than that from bottom packages. Foundation height for hand-built piles should be at least 18 inches above the yard surface. In well-laid-out and well-drained forklift yards, a 12-inch minimum is satisfactory in many regions, but in areas of high rainfall, the 18-inch minimum should be used with this type of stacking. In unpaved yards, weeds and debris should not be allowed to block air passage.

Roofs and Sheds

Clark and Headlee (1958) showed that pile roofs saved enough in degrade and drying time for 4/4 No. 1 Common and Better red oak to pay for the roofs in five uses. Also, faster drying rates and lower final moisture contents were achieved by the use of roofs in rainy spring weather. A report on similar Australian air drying research, reviewed by McMillen (1964), showed outstanding differences between roofed and nonroofed piles during rainy autumn and winter seasons. Hardwoods in nonroofed piles dried to 26 percent moisture content in 70 days, then did not dry any further for the next 150 days.

In regions of high rainfall, shed roofs give better protection of the lumber from rewetting. They can cut customary air drying times in half or greatly reduce the amount of water to be evaporated in a kiln after a "standard" length of air drying. An example of the halv-

ing of drying time is the seasoning of some railroad cross-ties in the southeastern coastal areas.

Climatological Conditions

The climate of the area or region in which the hardwood air-drying yard is located greatly influences the air-drying rate or yard output of air-dried lumber. Perhaps the most influential factor is temperature, but relative humidity and rainfall also are in the picture. In northern lumber-producing regions, the drying rate is retarded during the winter months by the low temperature. In the southern part of the country, where the winter dry-bulb temperatures are higher, better drying conditions are expected. But, these higher temperatures may be offset in some localities by rains that wet the lumber and extend the drying time unless the lumber is well protected.

A map of different air drying weather regions in the Eastern United States is shown in figure 5. There are about the same number of "good air drying months" throughout each region. There is no exact definition of a "good air drying month." Such a month, however, is probably roughly equivalent to a month with 22 or more days equivalent to the "effective air drying days" in the Upper Midwest (Rietz 1972). Research on beech, sugar maple, and red oak by Peck (1954, 1957, 1959) indicated hardwoods air dry at a moderate rate when the daily mean temperatures are over 45° F and at a considerably better rate when they are over 60° F. The boundaries of the zones in the map are largely based on the average cumulative "growing degree days" from March 1 to mid-October for the years 1971-5 (U.S. Department of Agriculture 1975). ("Growing degree days" are computed to a 50° F base with daily maximums listed to 86° F and daily minimums to 50° F.) The northern

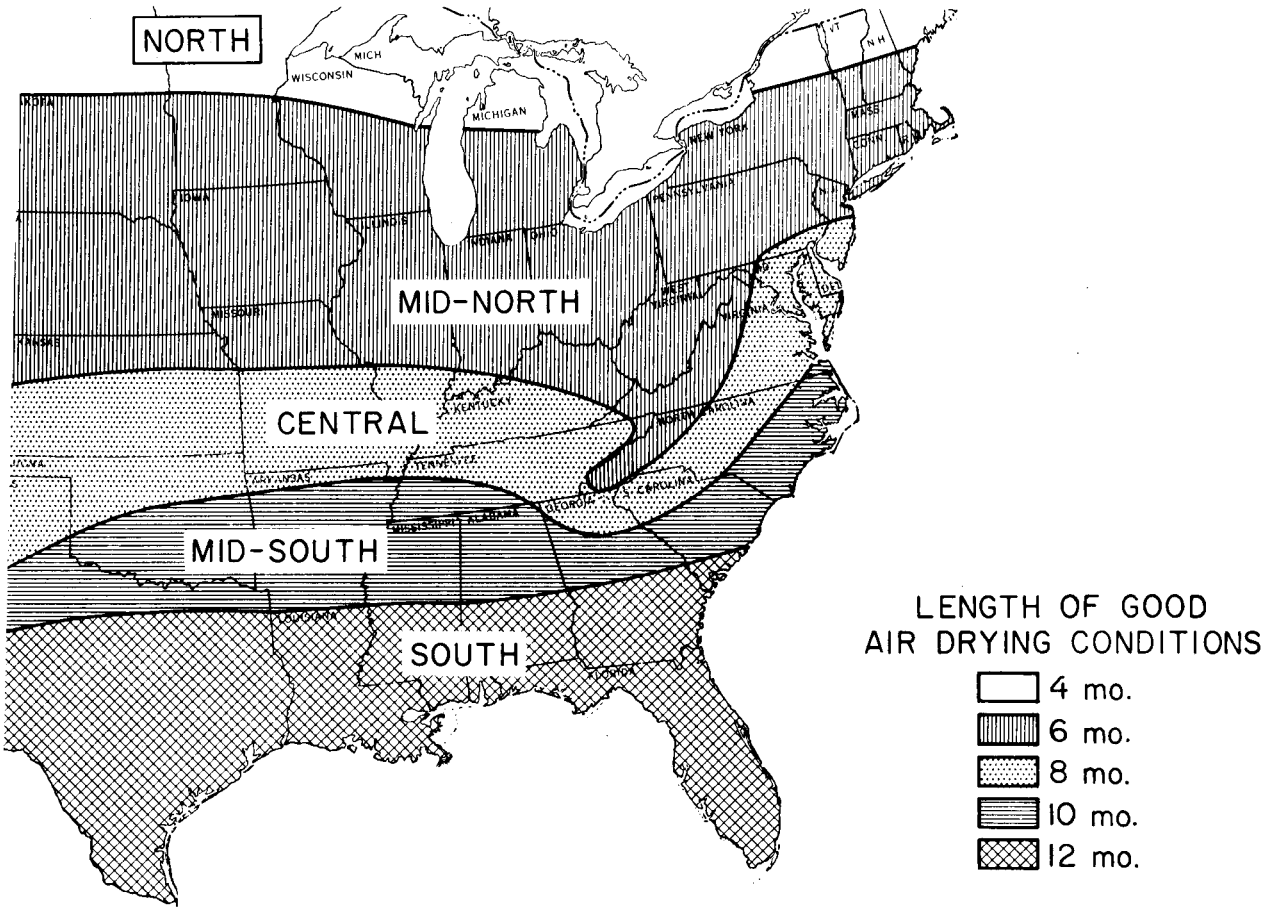

M 144115

Figure 5.—Air drying map for the Eastern United States.

extensions of the Central and Mid-South zones along the Atlantic Seaboard are located to coincide with the periods when mean temperatures are over 45° F (U.S. Department of Commerce 1973).

General confirmation of the map was obtained from a large number of persons throughout the Eastern United States who do commercial air drying. Within the Central, Mid-North, and North zones, a drying yard located on an exceptionally good site, with local temperature and wind velocity above the zone averages, could be expected to have an extra month per year of "good" weather.

Obviously, a "good" air drying day is not "the best." To use the map in planning the most economical mix of air drying and kiln drying or of accelerated air drying and kiln drying, one should consider that "good" air drying weather is capable of bringing 4/4 oak and other slow-drying hardwoods to 25 percent moisture content in 90 days. The "best" weather will do it in 60 days. During unusually cold winters in the South, 90 days will not be enough. This specific drying job should take about 120 days during such a winter.

Another important factor is the wood equilibrium moisture content (EMC).[6] At mean temperatures from 45° to 85° F, EMC is closely related to relative humidity:

Relative humidity (Pct)	*EMC* (Pct)
88	20
80	16
73	14
65	12
54	10
42	8
30	6
17	4

Wood in contact with 42 percent relative humidity obviously will dry faster than wood in contact with 88 percent. But even air at 88 percent has a good potential for drying wood to 25 percent moisture content, The objective of good site selection and preparation, good yard layout, and good pile design is to get the outside air to move into the pile to pick up moisture and then move out again. If the air does not move out, saturation occurs and drying stops. Where average relative humidities are high for long periods, the use of spaces between boards, or of flues and chimneys, is necessary along with high, open pile foundations. These will promote downward flow and remove moist air whenever any wind, however slight, occurs.

Conversely, too low a relative humidity, especially in company with high winds, can cause surface checking and end checking. This can happen at any time of year, not only during the "good" months. Danger periods often occur in late winter or early spring when rapid solar heating of air with a low absolute humidity causes the relative humidity to go to very low values. A good yard manager will learn from monthly weather records when such periods of low relative humidity are likely to occur and will pile check-susceptible species in a manner that restricts air circulation so as to avoid checking.

Rain is not a direct factor in governing drying rates. In low sites, with poor yard surfaces and drainage, rain tends to raise the relative humidity within the bottom of the piles and to interfere with downward air flow and moist air removal. Any lumber that is rewet, of course, must be redried. Pile roofs keep most of the rain out, with the water along the sides of the pile being only superficial, except for wind-driven rain. Where heavy rains are common, sheds with wide overhang should be considered.

Sunshine is another indirect factor. Solar radiation heats nearby land areas, exposed areas between the lumber piles, and surrounding buildings. Air moving over these warmed areas and structures is heated by convection, and its drying potential increases both by raising temperature and lowering relative humidity. Black bodies absorb more solar energy and become hotter than light-colored materials. This characteristic is used to advantage in air-drying yards by blacktopping the roadways and sometimes the whole area.

In some instances it may be desirable to arrange the main alleys of the yard north and south to take greatest advantage of the solar heat. This helps to quickly melt snow in the North and to dry out the yard faster in all regions after heavy rains. The sun also can cause too high a temperature and too fast drying in the tops of piles in the South and

[6] The EMC for a given atmospheric temperature and relative humidity is the moisture content at which wood in contact with that atmosphere neither gains nor loses moisture.

Table 2. —*Estimated time to air dry green 1- and 2-inch eastern hardwood lumber to approximately 20 percent average moisture content*

Species [1]	Size	Estimated time by region [2]			
		South	Mid-South	Central	Mid-North
	Inch	*Days*	*Days*	*Days*	*Days*
Ash	1	45 - 70	45 - 75	45 - 80	60 –[3]165
	2	180 - 210	180 - 220	180 - 230	No data
Aspen	1	—	—	—	50 -[3]120
	2	—	—	—	No data
Basswood, American	1	40 - 65	40 - 70	40 - 75	40 -[3]120
	2	170 - 200	170 - 210	170 - 220	No data
Beech, American	1	45 - 70	45 - 75	45 - 80	60 -[3]165
	2	180 - 210	180 - 220	180 - 230	No data
Birch, paper	1	—	—	—	40 -[3]120
	2	—	—	—	170 - 220
Birch, sweet; yellow	1	—	50 - 85	50 - 90	70 -[3]165
	2	—	190 - 240	190 - 250	No data
Butternut	1	—	40 - 70	40 - 75	60 -[3]165
	2	—	170 - 210	170 - 220	No data
Cherry	1	45 - 70	45 - 75	45 - 80	60 -[3]165
	2	180 - 210	180 - 220	180 - 230	No data
Cottonwood, eastern	1	40 - 65	40 - 70	40 - 75	50 -[3]120
	2	170 - 200	170 - 210	170 - 220	No data
Elm, American; slippery	1	40 - 65	40 - 70	40 - 75	50 -[3]120
	2	170 - 200	170 - 210	170 - 220	No data
Elm, rock cedar; winged	1	50 - 80	50 - 85	50 - 90	80 -[3]150
	2	190 - 230	190 - 240	190 - 250	No data
Hackberry, sugarberry	1	40 - 65	40 - 70	40 - 75	30 -[3]120
	2	170 - 200	170 - 210	170 - 220	No data
Hickory	1	50 - 80	50 - 95	50 - 90	60 -[3]165
	2	190 - 230	190 - 240	190 - 250	No data
Magnolia	1	40 - 75	—	—	—
	2	170 - 220	—	—	—
Maple, red; silver	1	40 - 65	40 - 70	40 - 75	30 -[3]120
	2	170 - 200	170 - 210	170 - 220	No data
Maple, sugar; black	1	45 - 70	45 - 75	45 - 80	50 -[3]165
	2	180 - 210	180 - 220	180 - 230	No data
Oak, lowland	1	100 -[3]280	—	—	—
	2	No data	—	—	—
Oak, red (upland)	1	60 - 120	55 - 100	50 - 90	60 -[3]165
	2	240 - 360	215 - 300	190 - 250	No data
Oak, white (upland)	1	60 - 120	55 - 100	50- 90	70 -[3]200
	2	240 - 360	215 - 300	190 - 250	No data
Pecan	1	60 - 120	65 - 100	50 - 90	60 -[3]165
	2	240 - 360	215 - 300	190 - 250	No Data
Sweetgum, heartwood (red gum)	1	50 - 80	50 - 95	50 - 90	70 -[3]200
	2	190 - 230	180 - 240	190 - 250	No data
Sweetgum, sapwood (sap gum)	1	40 - 65	40 - 70	40 - 75	60 -[3]165
	2	170 - 200	170 - 210	170 - 220	No data
Sycamore	1	40 - 65	40 - 70	40 - 75	30 -[3]120
	2	170 - 200	170 - 210	170 - 220	No data
Tupelo (and blackgum)	1	60 - 110	45 - 90	45 - 80	70 -[3]165
	2	210 - 300	180 - 220	180 - 230	No data
Walnut, black	1	45 - 70	45 - 75	45 - 80	70 -[3]165
	2	180 - 210	180 - 220	180 - 230	No data
Willow, black	1	30 - 65	35 - 70	40 - 75	30 -[3]120
	2	150 - 200	160 - 210	170 - 220	No data
Yellow-poplar	1	40 - 65	40 - 70	40 - 75	40 -[3]120
	2	170 - 200	170 - 210	170 - 220	No data

[1] Forest Service official tree names; corresponding botanical names are included in Appendix D.
[2] Regions of approximately equal number of months of "good" air-drying weather in accordance with figure 5.
[3] To an average moisture content of 25 percent.

Mid-South during the summer. This can cause honeycombing and collapse in woods like oak and willow. Pile roofs and closer pile spacing will reduce this form of degrade.

Drying Time and Final Moisture Content

Air-drying times published in Air Drying of Lumber have been limited to the 1-inch thickness and generalized for the entire range over which each wood grows. Energy conservation and interest rate fluctuations makes estimates for both 1- and 2-inch material and for specific regions desirable. Such estimates are given in table 2. They are for flat-sawed lumber in unit package piles 4 feet or narrower in width, or having central flues.

The minimum periods given apply to lumber piled during the best drying weather, generally spring and early summer. One-inch lumber piled too late in the period of best weather to reach 20 percent that fall, or that is piled during the fall or early winter, will not reach 20 percent for a very long time. Thus, maximum drying times for 1-inch lumber in the Mid-North region are indicated to the 25 percent moisture level. In fact, none of the times to 20 percent are to an absolute 20 percent but may be as much as 23 percent in poor drying weather. All of the times for 2-inch lumber may be considered as times necessary to bring the wood to somewhere between 23 and 27 percent moisture content.

These time estimates are somewhat speculative because they are based on sketchy information. It is believed, however, that they are the best base for calculating the feasibility of revising an old yard or building a new one with a good site, a good yard layout, the best piling practice with high, open pile foundations, and a roof on every pile.

An aid that should be very useful in estimating drying time so as to plan actual drying operations is the "effective air drying day calendar" developed by Rietz (1972) for the Upper Midwest. Each of the best months is considered to have 30 "effective air drying days," and other months lesser amounts as follows:

Month	*Effective air-drying days*
January	5
February	5
March	10
April	20
May	25
June	30
July	30
August	30
September	25
October	20
November	10
December	5

As an example, green 1-inch northern red oak was dried to 20 percent moisture content in 60 days in a good forklift yard with good air circulation when stacked in June or early July. This of course is the best drying weather in the location considered. If piled in early November the effective air drying days would be: November 10, December 5, January 5, February 5, March 10, April 20—total 55. Drying to 20 percent probably would be completed by May 5 to 8. This would give a total of 182 days. The research by Peck (1959) indicates 20 days would be saved by taking down the piles at 25 percent moisture content. This value would be reached in 162 days.

A similar calendar can be devised for any location. Rietz did not precisely define an "effective air-drying day," but it could be assumed to be equivalent to the average of all the days in full months of the late spring and summer season.

The calendar would be devised as follows:

Average the mean monthly temperature for the late spring and summer months; also find out the mean annual relative humidity and the mean annual wind velocity.

Assume each summer month had 30 effective air drying days (EADD). For any one of these months that has both mean relative humidity more than 5 percent above the annual mean and a mean wind velocity 4 or more miles per hour less than the annual mean, deduct 2 days (i.e., count such a month as having 28 EADD).

The major determinant of the EADD for the other months is temperature. For each 10° F that the mean temperature of any month is below the average of the mean temperatures of the summer months, deduct 5 days. After this deduction is made, deduct 2 days for mean relative humidity more than 5 percent above the annual mean *or* mean wind velocity of 4 or more miles per hour below the annual mean. If both these latter events occur, deduct 4 days.

Mean annual relative humidities are generally between 70 and 75 percent in the eastern hardwood region and mean air velocities 6 to 7 miles per hour.

The above values are suggestions based on general considerations and may be changed as experience is gained in applying this approach.

Once such a calendar is set up, one could use the minimum number of days for a certain item in the best months (from drying time tables) in conjunction with the "effective" days of the various months to predict when that item piled on any specific day of the year is likely to be dry. For yards located in the Tennessee Valley, and perhaps other parts of the Central zone, the TVA air drying guide should be helpful (Tennessee Valley Authority 1974). The charts in this guide show expected finishing dates for 1-inch and 2-inch hardwood lumber stacked on the 5th, 15th, or 25th of each month. No distinction is made, however, as to species of wood.

The practice of holding lumber 90 days on the air-drying yard and then shipping it with the implication that it will safely withstand drastic kiln drying is faulty on two counts. Ninety days is an unnecessarily long and expensive period for some areas of the country during much of the year. On the other hand, when the winter is abnormally cold in the central and southern regions, 90 days is not long enough to bring the average moisture content down to 25 percent.

There are advantages to keeping track of the moisture of the lumber as it air dries. A graph of past runs (fig. 6) can provide a good estimate of how long air drying will take for a given species, thickness, and time of year. The method of using samples described in the Dry

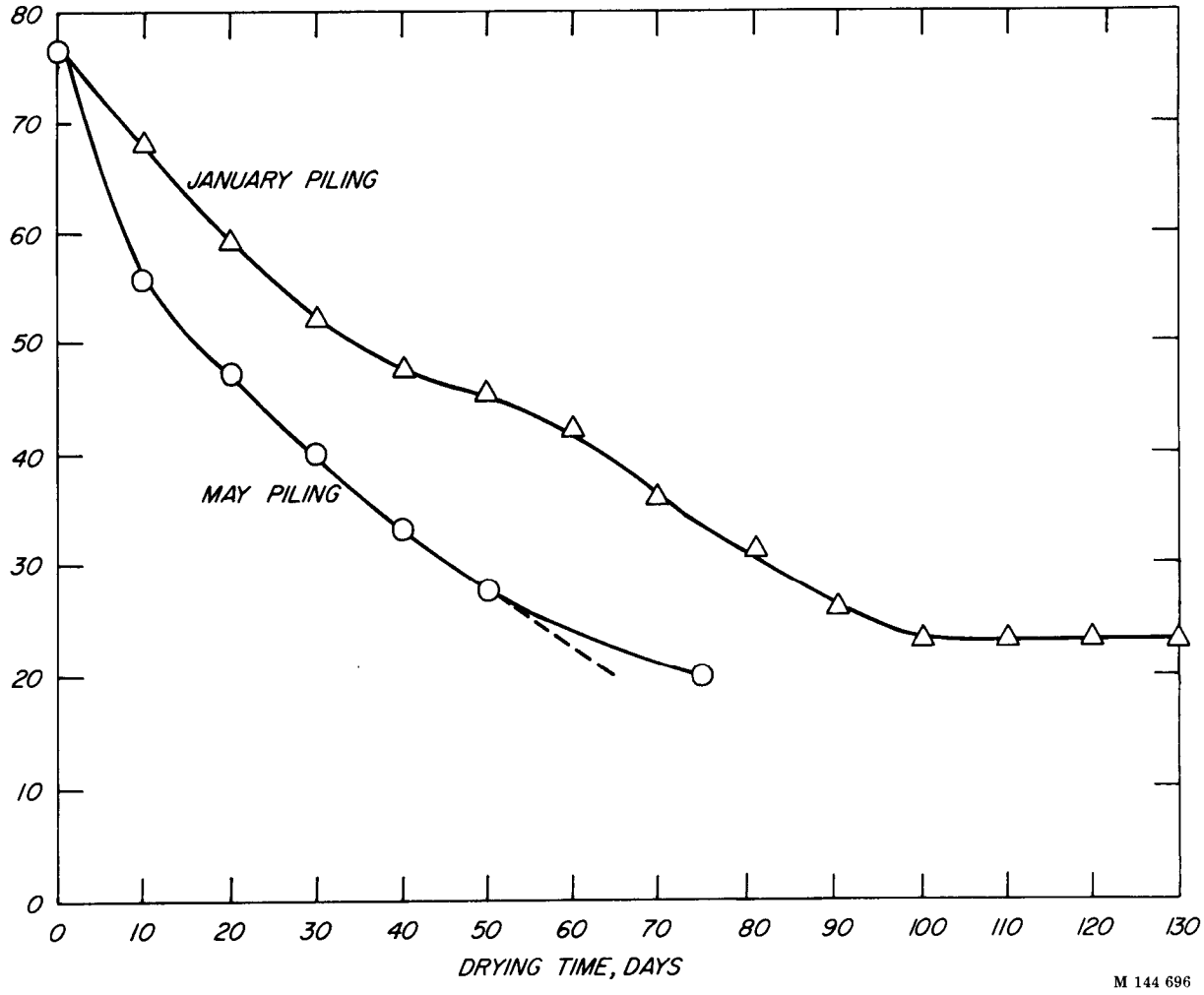

Figure 6.—Air drying curves for 4/4 northern red oak piled at different times of year in southern Wisconsin.

Kiln Operator's Manual, with certain modifications, is suitable for use in air drying. The sample pocket can be made two boards wide, with the sample placed in the inner space and a dummy board on the outer edge of the package. An alternative method places the sample in the bolster space between the two lowest packages and uses some means to prevent excessive air circulation over the sampie.

The curves (fig. 6) show differences that can occur in drying time depending upon time of piling in northern locations. They further indicate the impracticality of always waiting until the stock comes all the way to 20 percent moisture content. Safe methods for starting kiln drying of stock at 25 percent moisture content, regardless of kiln type, are described later.

Deterioration of Lumber While Air Drying

Losses in lumber value from defects that develop during air drying are reflected in the overall drying cost. Air-drying defects may be caused by shrinkage, fungal infection, insect infestation, or chemical action. Shrinkage causes surface checking, end checking and splitting, honeycomb, and warp. Fungus infection causes blue or sap stain, mold, and decay. Insect infestation results in pith flecks, pinholes, and grub holes left in the wood. Chemical reactions cause brown stain and sticker marking. Detailed descriptions are included in Air Drying of Lumber. These drying defects can be controlled by following recommended practices. Particularly helpful are attention to proper site, yard layout, drainage, and pile roofing.

If lumber is kept on the yard for an extended period of time, it may appear weathered because of an accumulation of sawdust, ashes, and windborne dirt. Minor darkening of the surface is not detrimental. Excessive darkening may be a sign that the lumber has been held far beyond the time necessary to reach 20 percent moisture content. After that period, alternate wetting and exposure to sun or hot winds can cause serious weather damage.

Air Drying Small Quantities of Lumber

Small quantities can be dried enough for general construction by air drying or for interior use by air drying followed by a short period of drying by another method. While this is relatively simple, the general procedures of commercial drying should be followed, with certain adaptations.

Good lumber cannot be produced from deteriorated material so the "first steps" described in chapter 2 are necessary. When the logs are sawed, insure that enough of each thickness is produced. See that each thickness is sawed to 3/8 inch over final size, plus or minus 1/8 inch. Finished items over 2 inches thick should be made from 1-inch lumber glued together after drying and planing. If polyethylene glycol treatment is to be used, apply that right away (see chapter 7).

Select a good place for the air drying pile. Species that dry rapidly (table 2) can be piled in the open. Species that take the longest times usually need protection from strong winds to avoid checking. Small piles do not need to be high above the ground, but the pile foundations should be open and strong, and should present a perfect plane for the first course of lumber. A slope of 1 inch per foot of pile length may be provided to aid drainage if the pile is to be wide, but two narrow, flat piles would be preferable. Sloped piles need to have their fronts pitched forward 1 inch per foot of height.

Every board in a course of lumber must be of the same thickness to hold warping to a minimum. Stacking should be done as soon as possible after sawing, using the general methods described in chapter 2. Renew the end coatings on thick lumber that has had its end coating damaged or trimmed off. Protect the top of the pile as it is being built and when it is finished by a roof that will shade the pile and shed rain. Weighting down with concrete blocks or other materials at the rate of 60 pounds or more per square foot will be helpful for warp-prone species.

Material that has been thoroughly air dried (to less than 20 percent moisture content) will not be dry enough for interior use, but it can

be made so by using heated room, dehumidifier, or solar drying or by inserting the stock in a commercial kiln load of air-dried hardwoods. See chapters 5 and 8.

A Quick Guide for Improving Air Drying Efficiency of Hardwoods

The following summarizes several procedures to reduce air-drying time and increase efficiency for greatest energy savings.

1. When green lumber arrives or is first cut, *immediately* get it on stickers. Even if it is going to the kiln soon, store it where it can air dry (where the wind can blow through the pile). *Drying is most rapid the first 3 to 4 days: Don't miss this opportunity for effective early drying.*

2. Spread lumber piles out to increase their exposure to drying winds. Spacings in Air Drying of Lumber are minimum. Lumber piled too closely increases relative humidity in the surrounding area and slows drying. Put the driest lumber on the outside edges of the yard (especially on the edges facing into the wind) so that it will dry even faster. However, for species such as oak, beech, and hickory, accelerated air drying (from too wide spacing) can also increase the risk of degrade from checking and honey comb.[7]

3. Consider using a sticker that is 25/32 inch thick or more. In contrast to thin stickers, this will permit both increased air flow and drying. Stickers should be of uniform thickness. As an alternative, consider narrower piles.

4. Cover the tops of the piles. Why expose lumber that is air drying to rainfall or snow?

5. Keep the yard clear of weeds and debris so that the bottom layers of the pile will dry as fast as the top layers. The pile foundations should be of sturdy, open construction and should support the lumber at least 12 inches above the ground.

[7] Species like oak and beech (refractory hardwoods) present special problems. Daily inspection is recommended with refractory hardwoods to discover any problems in either air or kiln drying before they can become serious.

Literature Cited

Clark, W. P. and T. M. Headlee
1958. Roof your lumber and increase your profits. For Prod. J. 8(12):19A–21A.

Finighan, R. and R. M. Liversidge
1972. An examination of some factors affecting the performance of air seasoning yards. Austral. Timber J. 38(3):12–27. (CSIRO, For. Prod. Div. (Austral.) Rep. No. 953, Melbourne)

McMillen, J. M.
1964. Wood drying—techniques and economics. South. Lbrmn. 208(2588):25–26, 28, 32–34.

Minter, J. L.
1961. One yard replaces three in model lumber storage, seasoning, and grading setup. Wood and Wood Prod. 66(8):23–24, 66, 70.

Peck, E. C.
1954. Effects of machine stacking on drying rate and degrade. South. Lbrmn. 189(2362):62,64,66–7 (Sept. 1)

Peck, E. C.
1957. Air drying and sticker staining of 4/4 sugar maple flooring stock in Upper Michigan. U.S. For. Prod. Lab. Rep. No. 2086.

Peck, E. C.
1959. Air drying of 4/4 red oak in southern Wisconsin. For. Prod. J. 9(7):236–242.

Rasmussen, E. F.
1961. Dry kiln operator's manual. U.S. Dep. Agric., Agric. Handb. 188. 197 p. illus.

Rietz, R. C.
1972. A calendar for air drying lumber in the upper Midwest. USDA For. Serv. Res. Note FPL–0224. For. Prod. Lab., Madison, Wis.

Rietz, R. C. and R. H. Page
1971. Air drying of lumber: A guide to industry practice U.S. Dep. Agric., Agric. Handb. 402. 110 p., illus.

Tennessee Valley Authority
1974. An air drying guide for the Tennessee Valley. Pam. F74F3, Div. For., Fish, and Wildlife Dev., TVA, Norris, Tenn.

U.S. Department of Agriculture
1975. Growing degree days. Weekly Weather and Crop Bull. 62(15):10–12 (Apr. 15)

U.S. Department of Commerce
1973. Monthly normals of temperature, precipitation, and heating and cooling degree days. 1941–70: New Jersey. Climatology of the United States No. 81 (by state). Nat. Ocean and Atmos. Admin., Environ. Data Serv., Asheville, N.C. (also available for other states and New England).

Wengert, E. M.
1974. How to reduce energy consumption in kiln drying lumber. USDA For. Serv. Res. Note FPL–0228. For. Prod. Lab., Madison, Wis.

White, J. F.
1963. Air circulation within a lumber yard—an analysis by model techniques. M.S. thesis, Univ. of Georgia.

CHAPTER 4
ACCELERATED AIR DRYING

Accelerated air drying is the use of low-cost techniques involving specially designed sheds, fans, and (sometimes) heating equipment to accomplish air drying in a shorter time. It includes yard-fan drying, shed-fan drying, forced-air drying, low-temperature kiln drying, and controlled-air drying. It thus encompasses any process that accelerates the evaporation of free water and the first one-third of the bound water from green wood to reduce the moisture content to the air-dried range. When heating is used, temperatures generally do not exceed 120° F. Solar drying that is used to bring lumber down to 20 percent moisture content is low-temperature forced-air drying, but broader scale solar drying is discussed later in this handbook.

Research Basis

Forced-air drying and other forms of accelerated air drying have been studied extensively in the United States and Canada. The methods are technically sound, and there have been many practical applications. Much of the research has been of an empirical nature. Several published reports are indicated later in this chapter. The Southeastern Forest Experiment Station of the Forest Service, U.S. Department of Agriculture, established technical data to aid in the design and operation of forced-air dryers. Data from one experiment by Vick (1965b) of that Station were used to derive figure 7.

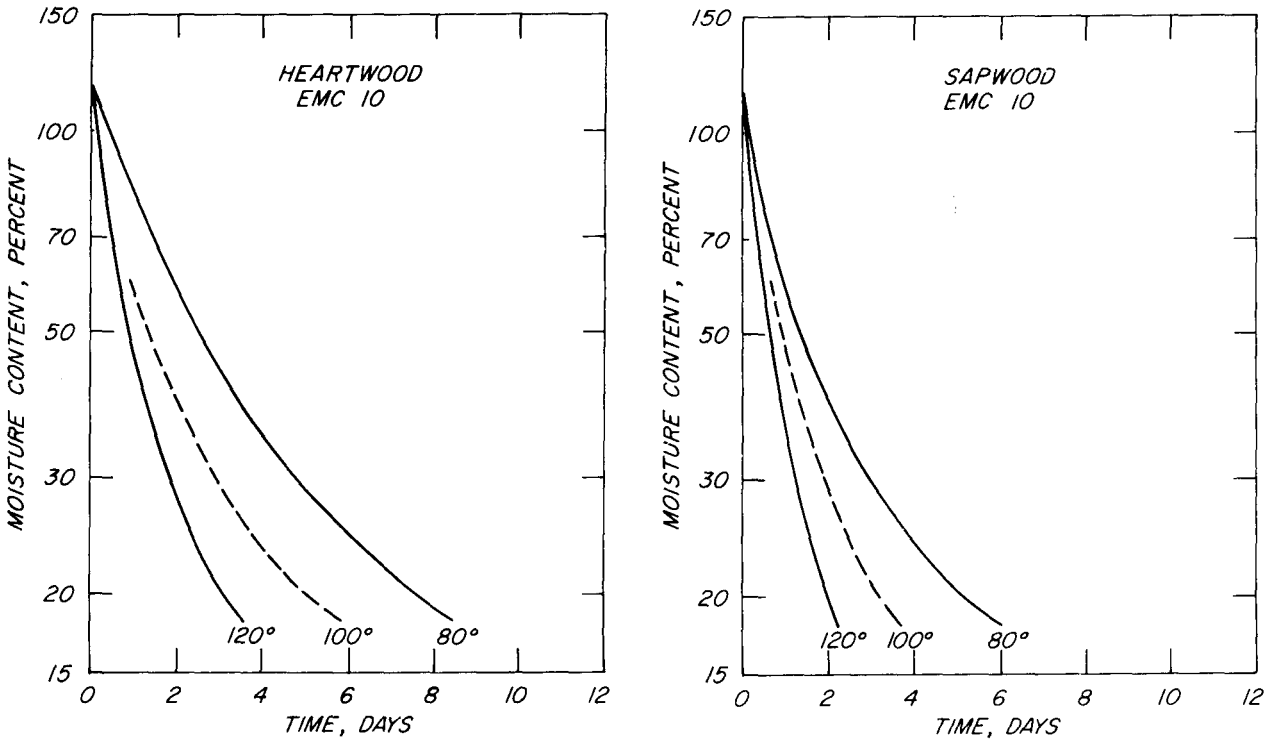

M 144694

Figure 7.—Effect of temperature on drying of 1-inch yellow-poplar lumber in a low-temperature forced-air dryer under 10 percent EMC conditions (after Vick 1965b).

This figure shows the influence of temperature on drying time at a constant equilibrium moisture content (EMC) condition. The air velocity was 550 feet per minute, and the load width 8 feet. Yellow-poplar has fast-drying heartwood but, as can be seen, the sapwood dried somewhat faster. At the 10 percent EMC used, the effect of temperature is significant. A 100° F temperature dries 4/4 sapwood to 20 percent moisture content (MC) in three-fifths of the time required at 80° F. The original paper also shows the effects of different EMC's. Degrade was very limited (maximum of $1.87 per thousand board feet) except when a 6 percent EMC was used at 120° F. The paper also shows the mathematical basis by which the actual results were found to agree with theoretical expectations. Similar data on 1-inch sweetgum lumber, tupelo rounds, and mixed hardwood rounds are available (Vick 1965a, 1968a, 1968b).

Information on the economic prospects of accelerated air drying has been published by a number of authors (Catterick 1970, Cuppett and Craft 1971, Davenport and Wilson 1969, Gatslick 1962, and Norton and Gatslick 1969). In general, the data indicate that accelerated air drying has little or no advantage over good summer air drying. An advantage could be anticipated during the 6 to 8 months of poor air drying weather in the North and Mid-North. The advantage may also be present in other areas where space for a well-laid-out air-drying yard is limited or where rainfall is heavy for long periods. Means of comparing economic advantage or disadvantage are described in the last chapter of this handbook.

Types of Dryers and Procedures

The shed-fan dryer has a permanent roof and canvas baffles that can be let down at the ends of the dryer (fig. 8). One side wall is permanent and furnished with a large number of fans. The fans always turn in one direction, to pull the air through the lumber. The entering-air side of the dryer is open to the yard. The heat in the ambient air is an important factor in drying the lumber. The shed-fan dryer works very well in the South. One-inch elm, sap gum, hackberry, and yellow-poplar have been dried from green to 29 percent MC and lower in 6 to 7 days (Helmers 1959). It also is very effective for soft maple. While this type of dryer has been installed in a few places in the North, it is really only effective there from mid-April until mid-October.

The yard-fan dryer is similar in construction, operation, and applicability to the shed-fan dryer except that different fan wall configurations can be used and the fans may be portable. The roof also is temporary and portable and may be made of canvas, plywood, or sheet metal panels. One mistake in use of some yard-fan dryers is to pile additional stacks of lumber in front of the fans. This greatly reduces their effectiveness.

The next improvement that can be made in drying lumber with forced air is to add heat. A solar-heated lumber dryer developed by the Forest Service in Puerto Rico with the assistance of the U.S. Forest Products Laboratory takes advantage of heat energy coming from the sun every day. This dryer dried 5/4 mahogany lumber to 20 percent MC in 12 days.

At Jacksonville, Fla., a semi-solar dryer made use of both steam heat from a wood-fired boiler and solar energy to predry magnolia lumber (Rucker and Smith 1961). The rapid predrying avoided the extensive oxidative graying that had been a costly cause of degrade of magnolia. Such a predryer could be expected to prevent oxidative discoloration in tupelo sapwood and hackberry.

The steam coils provided heat from 5 until 10 a.m. to bring the temperature up. From 10 a.m. on, the large, almost flat, black-painted roof absorbed enough solar energy to keep the temperature at about 110° F until about 8 p.m. The fans were left running overnight. The next morning the steam heat would be used again to bring the temperature up. This dryer brought 4/4 magnolia down to 20 percent MC or less in 6 days and 8/4 in 14 days.

A combination shed-fan and recirculating forced-air dryer has been installed in a limited number of instances. Heating the air to lower the EMC and increase the drying rate is not economical unless the air is recirculated. During very good outdoor drying weather, the louvers of this dryer are opened by hydraulic cylinders actuated by humidity controls. The overhead fans force the outside

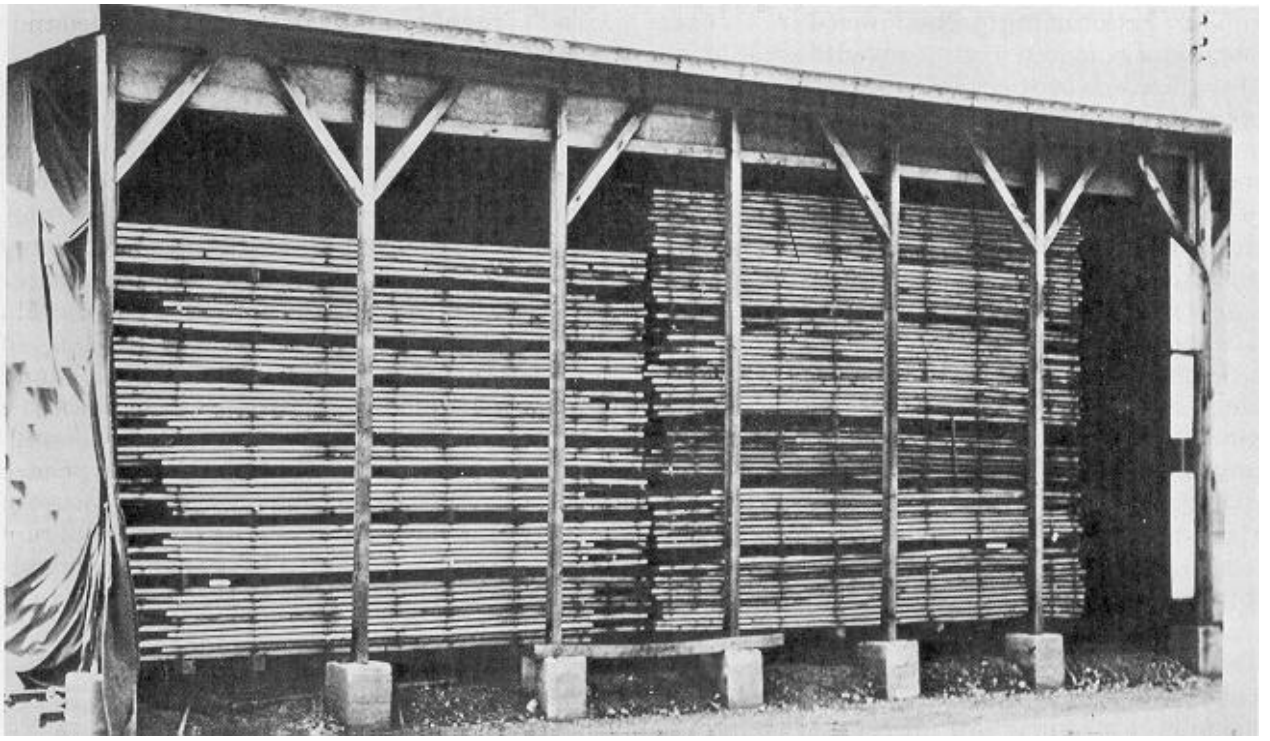

M 143 544

Figure 8.—Shed-fan track-type accelerated-air dryer.

air through the lumber and out through the other louvers. When the weather is damp or cold, the louvers are closed, a small amount of heat is used, and the air within the building is recirculated.

Recirculating dryers that use some heat are of two types: The forced-air dryer that only partially controls relative humidity by control of venting, and the low-temperature kiln that fully controls relative humidity. A schematic diagram of a typical Appalachian forced-air dryer with some provision for supplemental solar heating is shown in figure 9. Both the forced-air dryer and the low temperature kiln usually consist of an inexpensive structure (fig. 10) plus the necessary heating and controlling equipment. An earlier design (Gatslick 1962) had longer air travel, an undesirable feature unless very powerful air-circulating equipment is used.

Temperatures in both types of dryers range from 70° to 120° F. Both may have vents to exhaust excessive moisture, but the vents generally are operated in the closed position. They are opened when the drying schedule prescribes lowered relative humidity. In the forced-air dryer, temperature is controlled by a thermostat. Both the dry-bulb temperature and the wet-bulb temperature are observed with a hygrometer. In the low-temperature kiln, a steam spray line supplies humidity when needed, and a kiln-type recorder-controller both records the dry- and wet-bulb temperatures and regulates the heating coils and the steam spray.

The controlled-air dryer (fig. 11) is a large warehouse-type building of tight design in which large quantities of green lumber can be dried to 20 percent moisture content. A common size would hold 200,000 board feet. A convenient constant temperature, such as 80° or 85° F, is maintained throughout the building. A single large door at one end allows the green lumber to be brought in, and a similar door at the other end permits taking out loaded kiln trucks. These doors can be left open during operations without upsetting interior conditions. The relative humidity in each quarter, or 50,000-board foot bay of the building, can be controlled at the desired level (for example, 50 percent) by power intake and exhaust vents. These vents open when the

humidity gets too high. This procedure is, essentially, a one-step drying schedule.

Unit heaters or heating coils located at or near each intake vent are turned on when the vents open so that incoming air is heated to the dryer temperature. Air circulation designs evolved over a 5-year period currently provide about 100 feet per minute air velocity through the lumber. User-furnished data indicate that drying times for common items are about 40 percent longer than those of forced-air dryers. The controlled-air dryers have been able to satisfactorily predry mineral-streaked sugar maple. They have found application in the United States in northernmost States as well as in Canada.

Care must be used in piling lumber in a package-loaded dryer so that packages are not tight against each other or air will not flow freely through the sticker spaces.

Two major types of schedules for accelerated-air drying have been tested extensively. For forced-air dryers, with only partial control of relative humidity, two-step temperature schedules are used. For low-temperature kilns with steam spray and automatic recorder-controllers, multiple-step schedules are more appropriate.

Dry-bulb and wet-bulb temperature control of drying conditions is discussed in the Dry Kiln Operator's Manual, and the reasons for careful relative humidity control in drying green lumber are given in Air Drying of Lumber.

Forced-air drying schedules adapted from research at the Forest Products Marketing Laboratory, Princeton, W. Va. (Cuppett and Craft 1975) are listed in table 3. In this type of procedure, the desired dry-bulb temperature for the first step of the schedule is somewhere within a specific temperature range, depending on the species of wood (table 4). If the dryer has vents, they are kept closed as the dryer is heated up. Both dry-bulb and wet-bulb temperature are observed on the entering-air side of the load. When the differ-

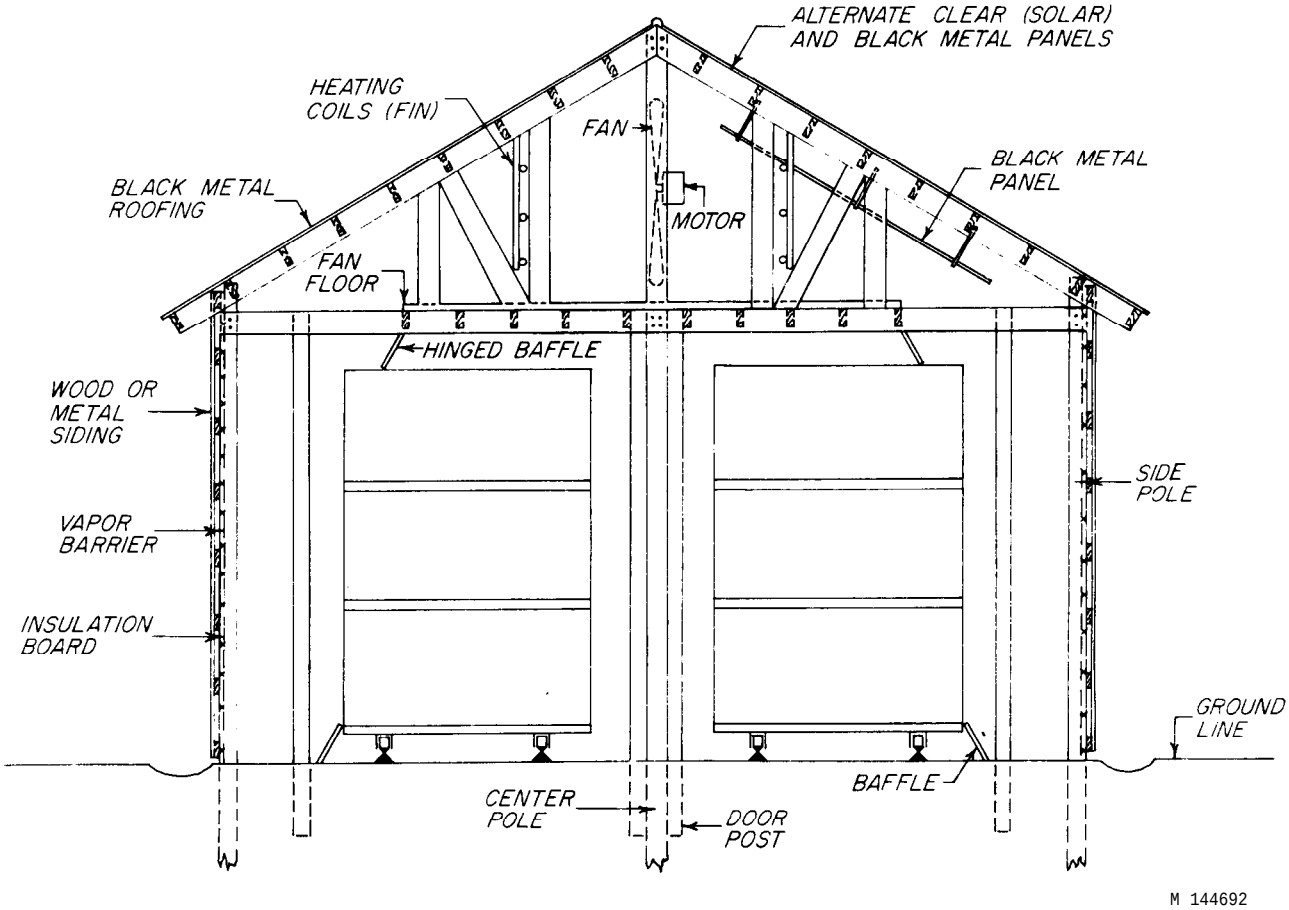

Figure 9.—Cross section of a typical forced-air dryer with fans located overhead. (After Cuppett and Craft 1975.)

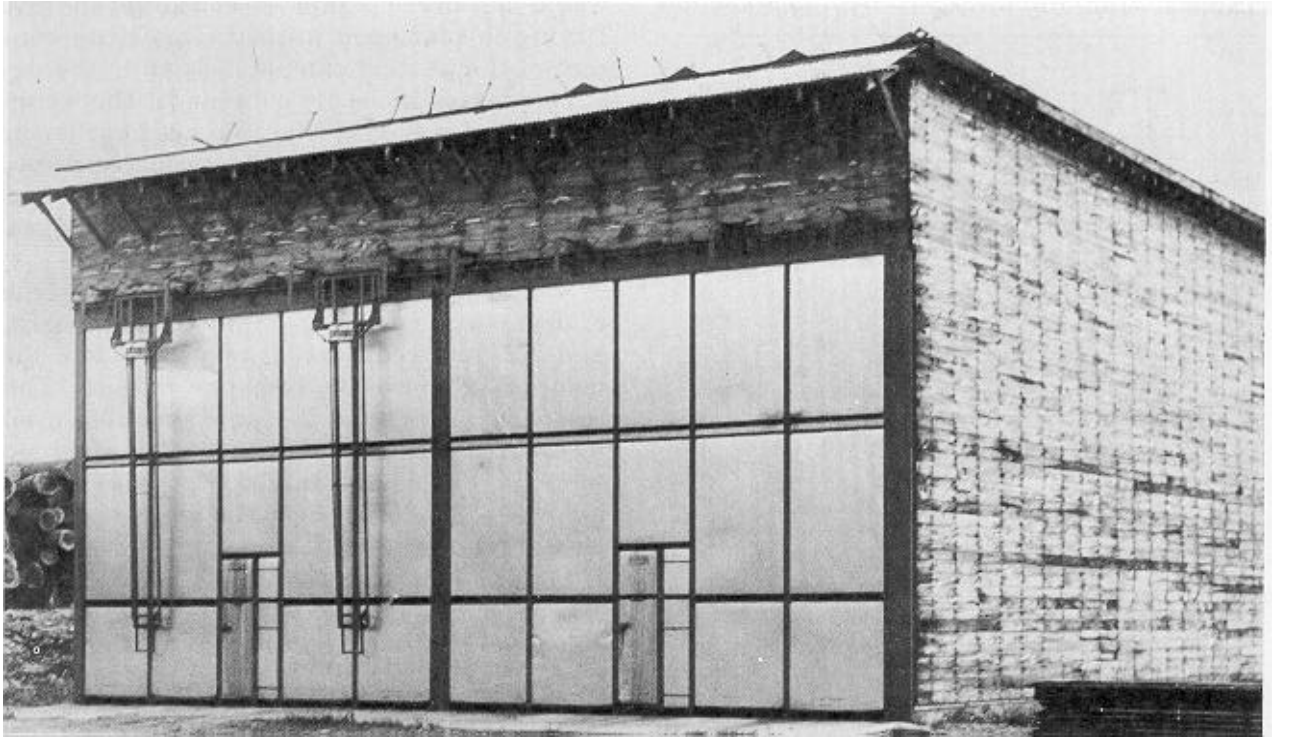

M 140 966-7

Figure 10.—Low-temperature kiln located at Allegany, N.Y.

ence between the two (the wet-bulb depression) becomes great enough to give the desired EMC condition, the thermostat is set at the dry-bulb temperature prevailing at that time. This temperature is maintained throughout the first schedule step. The wet-bulb depression tends to remain about the same for the first day or two because of moisture coming from the wood. Thereafter, the wet-bulb temperature falls gradually. When the moisture content of the wettest half of the drying samples (chapter 6, Dry Kiln Operator's Manual) falls to the moisture content for starting the second step of the schedule, the thermostat is raised to the temperature prescribed for that step. Generally the vents could be opened for a few days at this time to lower the EMC and accelerate drying. When the wet-bulb temperature settles to a nearly constant level, the vents

Table 3. —*Forced-air dryer schedules* [1] *for selected eastern hardwoods*

Step No.	Moisture content at start of step	Schedule designation					
		FA-1		FA-2		FA-3	
		Dry-bulb temperature	Wet-bulb depression	Dry-bulb temperature	Wet-bulb depression	Dry-bulb temperature	Wet-bulb depression
	Percent	*° F*	*° F*	*° F*	*° F*	*° F*	*° F*
1	Above MC of step 2	70-80	3	75-85	4	80-90	7
2a	45					100	([2])
b	40	90	([2])	95	([2])		

[1] Developed by Forest Products Marketing Laboratory, Princeton, W. Va. (Cuppett and Craft 1975). All operate at an air velocity of 450-600 feet per minute except for 6/4 and 8/4 oak and 8/4 beech and hickory, which use 250-350 feet per minute.

[2] No control of wet-bulb depression.

Table 4. —*Index of forced-air drying schedules*

Species	Size			
	4/4	5/4	3/4	3/4
Ash	FA-3	FA-3	FA-2	FA-1
Basswood	FA-3	FA-3	FA-3	FA-2
Beech	FA-2	FA-2	FA-1	FA-1[1]
Birch	FA-3	FA-3	FA-2	FA-1
Buckeye	FA-3	FA-3	FA-3	FA-2
Butternut	FA-3	FA-3	FA-3	FA-2
Cherry	F A 3	FA-3	FA-2	FA-1
Hickory	FA-2	FA-2	FA-1	FA-1[1]
Maple; red, silver	FA-3	FA-3	FA-2	FA-1
Maple, sugar	FA-3	FA-3	FA-2	FA-1
Oak, red	FA-2	FA-1	F A - 1[1]	FA-1[1]
Oak, white	FA-2	FA-1	FA-1[1]	FA-1[1]
Walnut, black	FA-3	FA-2	FA-1	FA-1
Yellow-poplar	FA-3	F A 3	FA-2	FA-2

[1] Air velocity through load, 250-350 feet per minute.

would be closed again to conserve energy. Drying is continued until the moisture content of the wettest sample is down to the desired average moisture content for the whole dryer charge. Vents might be used earlier in the schedule when drying basswood, buckeye, butternut, or yellow-poplar. Cuppett and Craft (1975) suggest hygrostat-controlled power venting for these species.

A final schedule consideration for this type of dryer is air velocity. Two-inch oak, beech, and hickory requires a relatively low air velocity—250 to 350 feet per minute. The same low air velocity probably should be used for 2-inch stock of other species for which no schedule has been established, until gradual increases in velocity show the higher rate can be used without causing drying defects. All 4/4 and 5/4 stock, plus the 6/4 of all species except the oaks, can use a higher air velocity-450 to 600 feet per minute.

M 140 966-23

Figure 11.-Inside of a controlled-air dryer.

Items and species having the same schedule designation (table 4) can be dried together in the same dryer load, but samples should be selected for the thickest, slowest drying item to determine when to remove the stock from the dryer.

During the first 6 months of development of a schedule for forced-air drying of a particular item of a particular species, a moisture meter test (James 1975) should be made of 5 percent of the material in packages of lumber from various parts of the dryer. This should show that all the boards have core moisture content values at or below 30 percent. If not, a longer drying time should be used the next time this item is dried.

The schedules are not ironclad rules. A user should gradually approach a more severe schedule for items that develop no defects when drying by the above. For warmer climates, slightly higher dry-bulb temperatures could be used if the desired wet-bulb depressions can be maintained during the first step. Solar radiation may cause the dry-bulb temperature to rise above the set point for 6 to 8 hours. This should be satisfactory unless the dry-bulb temperature exceeds the thermostat setting by more than 5° F during step 1. If that should occur, lower the thermostat setting 5° F throughout step 1.

Schedules developed industrially for low-temperature kilns are listed in table 5. In this type of procedure, the desired wet-bulb temperature is controlled for all steps. Partial control is maintained of the dry-bulb temperature. As with the forced-air dryer, the vents are kept closed as the kiln is heated up. When both the dry-bulb and the wet-bulb temperatures reach the scheduled set points, the recorder controller maintains the wet-bulb temperature at its prescribed level and sees to it that the dry-bulb temperature does not go below the set point. If solar radiation causes the dry-bulb temperature to rise slightly above the set point during the day, no change in settings is made.

These schedules were developed with air velocity through the load of 350 feet per minute and presumably would work equally well with air velocities up to 450 feet per minute. The vents would be controlled automatically by the recorder-controller and presumably would stay closed until 10° F or larger wet-bulb depressions are called for. Then the vents might be opened a short time at the start of each drying step but would automatically close most of the time and conserve energy. Drying condition changes would be made on the basis of the wettest half of the drying samples (chapter 6, Dry Kiln Operator's Manual). Determination of when to terminate a run would be on the same basis as for the forced air dryer.

Table 6 is an index of schedules for the low-temperature kiln (table 5). Items and species having the same schedule designation can be dried together, but samples should be selected for the thickest, slowest drying item to determine when to remove the stock from the dryer. Skillful dry kiln operators can

Table 5. —*Low-temperature kiln schedules* [1] *for selected eastern hardwoods*

Step No.	Moisture content at start of step	Schedule designation					
		LT-1		LT-2		LT-3	
		Dry-bulb temperature	Wet-bulb depression	Dry-bulb temperature	Wet-bulb depression	Dry-bulb temperature	Wet-bulb depression
	Percent	*° F*	*° F*	*° F*	*° F*	*° F*	*° F*
1	Greater than step 2	90	2	90	2	90	5
2a	60			95	2	100	5
2b	50	95	2	100	4	100	10
3a	45			100	5		
3b	40	100	5	100	7	100	15
4	35	100	10	100	10		
5	30	100	15	100	15		

[1] Developed by Robert G. Potter, Potter Lumber Co., Allegany, N. Y. (personal correspondence).

select the schedule most appropriate for species not listed in table 6 and insert the designations in the blank places left in the table for this purpose.

Table 6. —*Index of low-temperature kiln schedules*

Species	Size			
	4/4	5/4	6/4	8/4
Beech	LT-2	LT-2		
Cherry	LT-3 [1]			
Maple; red, silver	LT-3 [1]			
Maple; sugar	LT-3[1]			
Oak, red	LT-2	LT-2	LT-1[2]	LT-1[3]

[1] Minimum time on each step 24 hours.
[2] Minimum time on first step 36 to 48 hours.
[3] Part-time drying (fans on and kiln under control only 50 percent of time) during step 1.

The Eastern Forest Products Laboratory, Ottawa, Canada, has experimented extensively with predrying of sugar maple and yellow birch prior to final drying at 212° F. The procedure was essentially low-temperature kiln drying. With 4/4 sugar maple, Huffman and Cech (1969) found that least degrade coincided with the procedure that gave the shortest drying time. This involved a 600-foot-per-minute air velocity through the load. Although no steam spray was used, the kiln was tight enough so the schedule shown in table 7 prevailed.

In similar research done with yellow birch (Cech and Huffman 1968) no EMC data were presented. The dryer was run with no supplemental humidification. Presumably wet-bulb depressions were similar to those indicated in table 7 for maple. Some degrade was observed with the table 7 conditions as well as when using no humidification at 80° F and with 200 feet per minute air velocities. Similar results were obtained when humidification was used to provide a constant 14.6 percent EMC. Although the least degrade was obtained by the 14.6 percent EMC in combination with 100° F and 600 feet per minute, Cech (1973) later concluded that the schedule using 100° F, 600 feet per minute, and no humidification was satisfactory for both maple and birch.

Table 7. —*Approximate Canadian low-temperature kiln schedule* [1] *for 4/4 maple and birch*

Stap No.	Moisture content at start of step	Dry-bulb temperature	Wet-bulb depression
	Percent	*°F*	*°F*
1	Above 60	100	13
2	60	100	17
3	50	100	20
4	40	100	26

[1] Developed by Eastern Forest Products Laboratory, Ottawa, Canada (Huffman and Cech 1969).

In studying the benefits of presurfacing oak before drying, McMillen (1969, 1972) used low-temperature kiln drying schedules that increased temperature stepwise from 85° F to 105° F. Satisfactory results were obtained with white oak and red oak using an air velocity of 575 to 600 feet per minute, Cherrybark oak, however, surface checked excessively even though the air velocity was only 375 to 400 feet per minute. For drying rough-sawed oak, smaller wet-bulb depressions would be needed. The schedule in table 8 is suggested for cautious trial on central and northern region rough-sawed 4/4 red and white oak.

Table 8. —*Suggested low-temperature kiln schedule* [1] *for rough-sawed 4/4 red and white oak*

Step No.	Moisture content at start of step		Dry-bulb temperature	Wet-bulb depression
	Red oak	White oak		
	Percent	*Percent*	*°F*	*°F*
1	Above 50	Above 40	85	5
2	50	40	90	8
3	35	33	95	13
4	28	28	105	25

[1] Postulated from results with presurfaced oak (McMillen 1969, 1972) and rough-sawed northern red oak (Gatslick 1962).

Advantages and Disadvantages of Accelerated-Air Drying

The main advantage of accelerated-air dryers over yard drying is in getting lumber out of the weather and providing closer to ideal air-drying conditions for longer periods. Such dryers have special advantages in the northern part of the country where the air-drying weather is not good throughout the entire year. Drying rate in northern areas is likely to be two to four times as fast as outdoor drying. The air velocity through the load is 50 to 300 feet per minute if the lumber is piled relatively open. If the lumber is tightly placed so most of the air has to go through the lumber pile, velocities can be over 300 feet per minute.

Accelerated-air drying has these advantages over ordinary air drying:

1. Drying is faster because of protection from rain and faster air circulation. This speeds up drying, making it possible to reduce the lumber inventory, with very important savings in rent, interest, risk, and insurance.
2. The lumber supplier is able to respond quicker to a change in the market because he does not have a long period of air drying to get the lumber dry enough so it can go through his dry kilns quickly.
3. Accelerated-air drying gives the operator a chance to reduce shipping weight and thus the shipping charges.
4. It increases the productivity of the present kilns used only for drying green lumber, and the capital investment is less than building new kilns to do the same job.
5. Accelerated-air drying prevents sticker stain and oxidative or chemical stain in the lumber and protects it from the weather, preventing surface discoloration and producing a brighter colored stock with greater marketability. It also reduces surface checking and can reduce warping.

Disadvantages may be:

1. Moisture content may not be uniform if the dryer is not properly designed and properly operated.
2. Sticker staining or other discoloration may occur in light-colored woods if the relative humidity is allowed to remain high while the temperature is in a range where discoloration goes on at a rapid rate.
3. Costs may be higher than those for air drying when suitable land is readily available with low rent or taxes and when the producer is willing to assume a large share of the risk.

Drying Times

Drying times in forced-air dryers and low-temperature kilns still depend somewhat on the weather outside and the temperature selected by the operator. Equally important are the dryer design and the quality of stacking and loading. The drying times (table 9) are based on actual forced-air dryers and low-temperature kilns, but should be considered only as rough estimates. No two dryers will give the same performance. Gatslick (1962) and Vick (1965b, 1968a) give extensive drying data for low-temperature kilns that completely control EMC during the early part of the drying period. Cuppett and Craft (1971, 1975) give results in drying Appalachian oak and several other eastern hardwood species in a dryer where the only EMC control is by the dry-bulb temperature. Drying times in controlled air dryers are about 40 percent longer than those shown in table 9.

Table 9. —*Accelerated air drying times for common hardwood items in slightly heated forced-air dryers (low-temperature kilns)*

Species	Thickness	Temperature	Final moisture content	Drying time
		° F	*Percent*	*Days*
Aspen	4/4	—	20	7
Beech	4/4	—	25	8-9
	5/4	—	25	10-12
Birch	4/4	—	25	14
Cherry	4/4	—	25	7-8
	4/4	—	18	10
Elm, American	4/4	—	20	7
	8/4	—	35	7
Hickory	4/4	—	20	16-18
	5/4	—	20	22-24
Magnolia	4/4	—	20	8-9
	8/4	—	20	15-18
Maple, hard	4/4	—	25	8-10
	5/4	—	25	12–14
Maple, soft	4/4	—	20	6-7
	5/4	—	20	7-8
	5/4	—	12	11
Oak, Appalachian red	4/4	70	20	31
	4/4	85	20	19
Oak, northern red	4/4	—	20	18-23
	5/4	—	25	14-35
	6/4	—	25	15-40
	8/4	—	25	40-62
	8/4	—	20	55
Oak, white	—	—	20	1 or 2 days less than for red oak
Sweetgum, sapwood	4/4	80	20	7
	4/4	100	20	4½
Walnut	6/4	—	17	14
Yellow-poplar, sapwood	4/4	80	20	6
	4/4	100	20	4
Yellow-poplar, heartwood	4/4	80	20	9
	4/4	100	20	6½

Literature Cited

Catterick, J.
1970. Costs of low temperature drying. North. Logger and Timber Proc. 18(9):18,50,60.

Cech, M. Y.
1973. The status of high-temperature kiln drying in eastern Canada. Can. For. Ind. 93(8):63–5,67,69,71.

Cech, M. Y. and D. R. Huffman
1968. Low-temperature kiln-drying of yellow birch lumber. For. Prod. J. 18(2):62–68.

Cuppett, D. G. and E. P. Craft
1971. Low temperature drying of 4/4 Appalachian red oak. For. Prod. J. 21(1):34–38.

Cuppett, D. G. and E. P. Craft
1975. Low temperature forced-air drying of Appalachian hardwoods. USDA For. Serv. Res. Pap. NE–328. Northeast For. Exp. Stn., Upper Darby, Pa.

Davenport, K. L. and L. E. Wilson
1969. A cost analysis of yard drying and low-temperature forced-air drying of lumber in Alabama. Auburn Univ. Agric. Exp. Stn. Circ. 1970. 19 p., illus.

Gatslick, H. B.
1962. The potential of the forced-air drying of northern hardwoods. For. Prod. J. 12(8):385–388.

Helmers, R. A.
1959. New way to speed air drying of hardwoods. Furniture Design and Mfg. 31(11):30–31,35.

Huffman, D. R. and M. Y. Cech
1969. Kiln drying of hard maple lumber. Pub. No. 1257, Eastern For. Prod. Lab., Ottawa, Canada.

James, W. L.
1975. Electric moisture meters for wood. USDA For. Serv. Gen. Tech. Rep. FPL–6. For. Prod. Lab., Madison, Wis.

McMillen, J. M.
1969. Accelerated kiln drying of presurfaced 1-inch northern red oak. USDA For. Serv. Res. Pap. FPL 122. For. Prod. Lab., Madison, Wis.

McMillen, J. M. and R. C. Baltes
1972. New kiln schedule for presurfaced oak lumber. For. Prod. J. 22(5):19–26.

Norton, K. and H. B. Gatslick
1969. Potential of low temperature drying of eastern spruce and eastern hemlock. For. Prod. J. 19(10):33–36.

Rasmussen, E. F.
1961. Dry kiln operator's manual. U.S. Dep. Agric., Agric. Handb. 188, 197 p., illus.

Rietz, R. C. and R. H. Page
1971. Air drying of lumber. U.S. Dep. Agric., Agric. Handb. 402, 110 p., illus.

Rucker, T. W. and W. R. Smith
1961. Forced air-drying of lumber—research and experimental. For. Prod. J. 11(9):390–394.

Vick, C. B.
1965a. Forced air drying sweetgum furniture billets in solid stacks. For. Prod. J. 15(3):121. (Title erroneous; later corrected species name to sap tupelo.)

Vick, C. B.
1965b. Drying-rate curves for 1-inch yellow-poplar lumber in low-temperature forced-air dryers. For. Prod. J. 15(12):500–504.

Vick, C. B.
1968a. Low-temperature drying of 1-in. sweetgum. For. Prod. J. 18(4):29–32.

Vick, C. B.
1968b. Forced-air drying of unstickered hardwood furniture rounds. For. Prod. J. 18(7):46–8.

CHAPTER 5
CONVENTIONAL KILN DRYING

Kiln drying is carried out in a closed chamber or building in which air is rapidly circulated over the surface of the wood being dried. Conventional dry kilns use initial drying temperatures from 100° to 170° F and final temperatures from 150° to 200° F. These higher air temperatures and faster circulations are the principal means of accelerating drying greatly beyond the rates of air drying and accelerated-air drying. Control of relative humidity or EMC is necessary to avoid shrinkage-associated defects and to equalize and condition the wood to the degree of precision needed. Air velocities through the load in drying hardwoods generally are between 200 and 450 feet per minute. Temperature and relative humidity are controlled by semi-automatic dry- and wet-bulb temperature recorder-controllers. A typical recorder-controller chart is shown in figure 12.

Two types of conventional kilns are in general use for hardwoods—package-loaded compartment and track-loaded compartment kilns. There are two basic heating systems, steam and hot air (or direct-fired). Well over three-fourths of the kilns designed to dry hardwoods are steam-heated, internal fan forced circulation, track- and package-loaded kilns. In recent years, the direct-fired kiln, with supplemental steam or water spray for humidification, has been used occasionally for hardwoods. Considerable modification of kiln

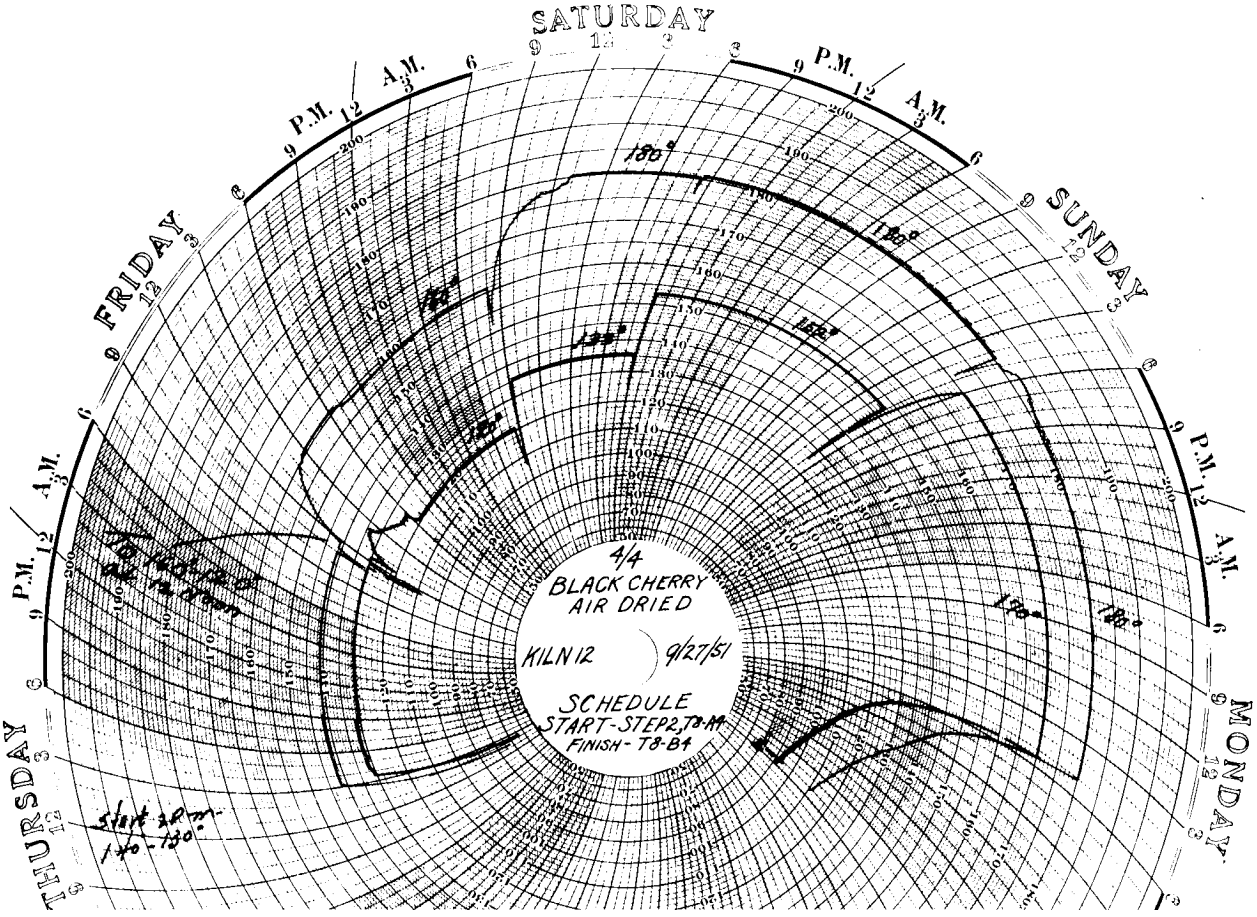

M 88590F

Figure 12.—Instrument chart of conditions used in kiln drying a small load of air-dried black cherry. (Assumed to have undergone surface moisture regain.)

temperature schedules would be needed if such kilns, without humidification, were to be used for green hardwoods intended for furniture or other high-class uses. More information about all types of kilns is given in chapter 2 of the Dry Kiln Operator's Manual (1961). Many technical factors, however, are involved in dry kiln design; it is recommended that individuals considering installation of kilns for moderate- to large-scale commercial production obtain them from regular dry kiln manufacturers.

The length of air travel through the load in a package-loaded dry kiln and reheating the air between the tracks in track-type kilns are critical factors in drying green hardwoods. An air travel of more than 8 feet without reheating requires undue lengthening of the drying time to avoid collapse and honeycombing of the wood in the middle of the load. The length of drying time is one of the most important cost factors. "Booster" reheat steam coils between tracks overcome this difficulty, but they must be correctly designed and operated to avoid surface checking of refractory woods early in drying. This hazard occurs from increasing dry-bulb temperature too much by direct radiation. Drying defects cause degrade, which is another very significant cost factor. Kiln drying defects and methods of minimizing them are illustrated and discussed extensively in the Dry Kiln Operator's Manual.

The best practices for kiln drying hardwoods now are essentially the same as those described in the Manual. They involve the use of recommended kiln schedules based on the moisture content of the lumber being dried. This initially involves use of kiln samples, short end-coated boards by which the changing moisture content of the kiln load is estimated. The details of selecting, preparing, and using kiln samples are fully covered in the Manual, so they will not be repeated in this publication. Basic kiln schedules, which combine the recommended kiln schedules with other recommendations to save energy, to equalize board moisture content, and to relieve drying stress, are outlined later in this chapter.

Improvements in kiln schedules have always been sought to shorten drying time and decrease cost without sacrificing quality. This quest has been intensified now that energy and other costs have risen sharply. At the time the recommended schedules were devised, there was a great deal of variability in the performance of dry kilns and in their operation and care. The schedules, therefore, were purposely conservative. In many cases they can be accelerated and considerable savings will result. Examples of how the drying of oak can be accelerated are discussed following the section on basic kiln schedules. Similar schedule accelerations can be applied to other woods, Two other groups of schedules—simplified schedules (applicable to 4/4 thickness of a limited number of woods) and special schedules for special purposes-also are discussed under Drying Procedures. This section includes suggestions for predicting drying time.

Equalizing and conditioning (stress relief) are two quality-control measures necessary to complete the seasoning of fine purpose hardwoods. The previously recommended methods are excessively high in energy demands. This chapter contains suggestions that considerably reduce these demands.

A number of suggestions for tightening up kiln structures and for carrying out the prescribed procedures are discussed under Operational Considerations. As many or more savings can be made by following these suggestions as by adopting the new procedures themselves.

Drying Procedures

Basic Kiln Schedules

The recommended kiln schedules for hardwoods in the Dry Kiln Operator's Manual were carefully worked out combinations of dry-bulb and wet-bulb temperatures based on research and experience. They will dry any hardwood item at a generally satisfactory rate without causing objectionable drying defects. Drying defects are caused by shrinkage-related stresses that are related to the average moisture content of the stock; changes in kiln conditions during the drying run are based on the average moisture content of the wettest half of the kiln samples.

The recommended schedules were presented as guides from which the well-trained, experienced kiln operator was expected to derive optimum schedules best suited for his material, equipment, and operations. In all, the Manual indexed 77 hardwood schedules, but the operator had a total array of 672 schedules which he could use for changing schedules as much as circumstances and his experience dictated.

Because much of the future practice in kiln-drying hardwoods probably will involve air-dried or partly air-dried stock, it becomes feasible to group eastern hardwood schedules into 11 pairs of basic schedules. All species in each schedule group originally had identical or very similar dry-bulb temperatures. Also, since the final stages of all hardwood schedules involve very large wet-bulb depressions, all species in each group had similar intermediate and final wet-bulb temperatures. The basic schedules, therefore, are essentially the same as the recommended schedules, so far as air-dried and partly air-dried hardwoods are concerned.

There should be little or no increase in drying time for the basic schedules beyond that experienced with the recommended schedule. In a few cases, the basic schedules will result in longer times than the recommended schedules when drying green stock. The basic schedules also may be slightly too severe for green stock of a few species (see footnotes in the basic schedule tables). When drying large quantities of green stock, the kiln operator is encouraged to revert to the originally recommended schedule from the Manual.

For the basic kiln schedules, species are grouped in table 10. An alphabetical index of

Table 10. -*Grouping species for basic kiln schedules*

Table No.	Temperature schedule for: 4/4	Temperature schedule for: 8/4	Severity of schedule	Species in group
12	T2	Irregular	Mild	Red and white oak, southern lowland
13	T4	T3	Mild	Red oak, northern or upland
14	T4	T3	Mild	White oak, northern or upland
15	T6	T3	Mild	Apple, dogwood, rock elm, hophornbeam, black locust, osage-orange, persimmon, sycamore
16	T6	T3	Moderate	American elm, slippery elm, holly, mahogany, black walnut
17	T8	T5	Mild	Beech, sugar maple, hickory, pecan
18	T8	T5	Moderate	Black ash, green ash, white ash, yellow birch, cherry, cottonwood (wet-streak), hackberry, red maple, silver maple, sassafras, sweetgum heartwood (redgum)
19	T10	T8	Moderate	Basswood (light color), paper birch, buckeye, butternut, chestnut, cottonwood (normal), magnolia, swamp tupelo (swamp blackgum), black willow
20	T11	T10	Moderate	Yellow-poplar, cucumbertree
21	T12	T11	Moderate	Black tupelo (blackgum), sweetgum sapwood (sapgum)
22	T12	T10	Severe	Aspen (sapwood or box), basswood

the species and their basic schedule table number is presented in table 11. The basic schedules themselves are given in tables 12 through 22. The schedule code numbers used in the Dry Kiln Operator's Manual for each species are given at the bottom of the basic schedule tables. Recommendations and schedule code numbers for 1- and 2-inch squares and thick hardwoods are given in tables 12 and 13 of the Manual.

Each of the basic schedulel tables shows specific temperature and wet-bulb depressions during the intermediate and final stages of drying; these temperatures and depressions are slightly different from the original Manual recommendations. Specific temperature and wet-bulb depression values are also included for equalizing and conditioning. All of these specifics are designed to conserve energy and are essentially what a prudent kiln operator would already be doing to accomplish this end.

The intermediate and final stage wet-bulb temperatures are close to those that are naturally attained when the vents are kept closed and the steam spray is turned off. Operators who do not know how to achieve this mode of operation with their equipment should check with their kiln manufacturer. Close control of wet-bulb temperature is not necessary during the final drying stage when the schedule shows depression values of 45° F or larger. Just keep the vents closed and the steam spray off. During equalizing and conditioning, however, close control is necessary, and a clean wet-bulb wick is necessary to attain this close control. An explanation of the equalizing and conditioning specifics is given later in this chapter.

Specific procedures for starting up the kiln and the first day or two of the run when drying air-dried or partly air-dried stock are given below. The average moisture content of air-dried stock should be 25 percent or lower with no material over 30 percent. For partly air-dried stock, no material should be over 50 percent moisture content. Specific procedures for starting up and drying green lumber are given in chapter 10 of the Dry Kiln Operator's Manual. Although the same schedule generally is prescribed for 4/4, 5/4, and 6/4 of each species, the 6/4 will take considerably longer to dry than the 4/4, and therefore the best practice is to dry each size separately. If 4/4 and 5/4 must be dried together, most kiln samples should be taken from the 5/4 stock.

Table 11. —*Alphabetical index of species and basic kiln schedule table numbers*

Species	Table No.
Apple	15
Ash: black, green, white	[1]18
Aspen	[1]22
Basswood (slight browning)	22
Basswood (light color)	19
Beech	17
Birch, paper	19
Birch, yellow	18
Blackgum	(see tupelo)
Buckeye	19
Butternut	19
Cherry, black	[1]18
Chestnut	19
Cottonwood, normal	19
Cottonwood, wet-streak	18
Cucumbertree	20
Dogwood	15
Elm: American, slippery	16
Elm, rock	15
Gum	(see sweetgum)
Hackberry	18
Hickory	17
Holly, American	16
Hophornbeam (ironwood)	[1]15
Locust, black	[1]15
Magnolia	19
Mahogany	16
Maple: red, silver	18
Maple: sugar	17
Oak: red, northern or upland	[1]13
Oak: white, northern or upland	[1]14
Oak: red or white, southern lowland	[1]12
Osage-orange	[1]15
Pecan	[1]17
Persimmon	15
Poplar	(see yellow-poplar)
Sassafras	18
Sweetbay	(see magnolia)
Sweetgum, heartwood (redgum)	18
Sweetgum, sapwood (sapgum)	[1]21
Sycamore, American	[1]15
Tupelo, black (blackgum)	21
Tupelo, swamp (swamp blackgum)	[1]19
Tupelo, water (tupelo)	(see Dry Kiln Operator's Manual)
Walnut, black	16
Willow, black	19
Yellow-poplar	20

[1]See special note in table indicated

Table 12. —*Basic kiln schedules for red and white oak, southern lowland* [1]

Moisture content at start of step	4/4, 5/4 (T2-C1) [2]			6/4, 8/4 (Irregular)		
	Dry-bulb temperature	Wet-bulb depression	Wet-bulb temperature	Dry-bulb temperature	Wet-bulb depression	Wet-bulb temperature
Percent	° *F*	° *F*	° *F*	° *F*	° *F*	° *F*
Above 40	100	3	97	(Air dry to 25 pct MC)		
40	100	4	96			
35	100	6	94			
30	110	10	100	105	8	97
25	120	25	95	110	11	99
20	130	40	90	120	15	105
15	150	45	105	130	30	100
11	160	50	110	160	50	110
Equalize	173	43	130	173	43	130
Condition	180	10	170	180	10	170

[1] For all oak species, 6/4 stock usually is dried by the 8/4 schedule.
[2] The recommended green stock code number is the same.

Table 13. —*Basic kiln schedules for red oak, northern or upland* [1]

Moisture content at start of step	4/4, 5/4 (T4-D2) [2]			6/4, 8/4 (T3-D1) [2]		
	Dry-bulb temperature	Wet-bulb depression	Wet-bulb temperature	Dry-bulb temperatrue	Wet-bulb depression	Wet-bulb temperature
Percent	° *F*	° *F*	° *F*	° *F*	° *F*	° *F*
Above 50	110	4	106	110	3	107
50	110	5	105	110	4	106
40	110	8	102	110	6	104
35	110	14	96	110	10	100
30	120	30	90	120	25	95
25	130	40	90	130	40	90
20	140	45	95	140	45	95
15	180	50	130	160	50	110
Equalize	173	43	130	173	43	130
Condition	180	10	170	180	10	170

[1] For all oak species, 6/4 stock usually is dried by the 8/4 schedule.
[2] The recommended green stock code numbers are the same.

Table 14. —*Basic kiln schedules for white oak, northern or upland* [1]

Moisture content at start of step	4/4, 5/4 (T4-C2) [2]			6/4, 8/4 (T3-C1) [2]		
	Dry-bulb temperature	Wet-bulb depression	Wet-bulb temperature	Dry-bulb temperature	Wet-bulb depression	Wet-bulb temperature
Percent	° *F*	° *F*	° *F*	° *F*	° *F*	° *F*
Above 40	110	4	106	110	4	107
40	110	5	105	110	4	106
35	110	8	102	110	6	104
30	120	14	106	120	10	110
25	130	30	100	130	25	105
20	140	45	95	140	40	100
15	180	50	130	160	50	110
Equalize	173	43	130	173	43	130
Condition	180	10	170	180	10	170

[1] For all oak species, 6/4 stock usually is dried by the 8/4 schedule.
[2] The recommended green stock code numbers are the same.

Table 15 —*Basic kiln schedules for rock elm, dogwood, persimmon, and similar woods* [1]

Moisture content at start of step	4/4, 5/4, 6/4 (T6-B3)			8/4 (T3-B2)		
	Dry-bulb temperature	Wet-bulb depression	Wet-bulb temperature	Dry-bulb temperature	Wet-bulb depression	Wet-bulb temperature
Percent	***° F***	***° F***	***° F***	***° F***	***° F***	***° F***
Above 35	120	5	115	110	4	106
35	120	7	113	110	5	105
30	130	11	119	120	8	112
25	140	19	121	130	14	116
20	150	35	115	140	30	110
15	180	50	130	160	50	110
Equalize	173	43	130	173	43	130
Condition	180	10	170	180	10	170

[1] Species included and recommended green stock code numbers:

Species	*Code No. for:* 4/4, 5/4, 6/14	8/4
Apple	T6-C3	T3-C2
Dogwood	T6-C3	T3-C2
Elm, rock	T6-B3	T3-B2
Hophornbeam (ironwood) [2]	T6-B3	T3-B1
Locust, black [2]	T6-A3	T3-A1
Osage-orange [2]	T6-A2	T3-A1
Persimmon	T6-C3	T3-C2
Sycamore [2]	T6-D2	Te-D1

[2] For 4/4 and 8/4 locust and osage-orange and 8/4 hophornbeam (ironwood) and sycamore stock over 35 percent moisture content, use the green stock schedule.

Table 16. —*Basic kiln schedules for American and slippery elm, holly, and black walnut* [1]

Moisture content at start of step	4/4, 5/4, 6/4 (T6-C4)			8/4 (T3-C3)		
	Dry-bulb temperature	Wet-bulb depression	Wet-bulb temperature	Dry-bulb temperature	Wet-bulb depression	Wet-bulb temperature
Percent	*° F*	*° F*	*° F*	*° F*	*° F*	*° F*
Above 40	120	7	113	110	5	105
40	120	10	110	110	7	103
35	120	15	105	110	10	100
30	130	25	105	120	19	101
25	140	35	105	130	35	95
20	150	40	110	140	40	100
15	180	50	130	160	50	110
Equalize	173	43	130	173	43	130
Condition	180	10	170	180	10	170

[1] Species included and recommended green stock code numbers:

Species	*Code No. for* 4/4, 5/4, 6/4	8/4
Elm, American	T6-D4	T5-D3
Elm, slippery	T6-D4	T5-D3
Holly	T6-D4	T4-C3
Mahogany	T6-C4	T4-C3
Walnut, black	T6-D4	T3-D3

Table 17. —*Basic kiln schedules for beech, sugar maple, and pecan* [1]

Moisture content at start of step	4/4, 5/4, 6/4 (T8-C2)			8/4 (T5-C1)		
	Dry-bulb temperature	Wet-bulb depression	Wet-bulb temperature	Dry-bulb temperature	Wet-bulb depression	Wet-bulb temperature
Percent	*° F*	*° F*	*° F*	*° F*	*° F*	*° F*
Above 40	130	4	126	120	3	117
40	130	5	125	120	4	116
35	130	8	122	120	6	114
30	140	14	126	130	10	120
25	150	30	120	140	25	115
20	160	40	120	150	35	115
15	180	50	130	160	50	110
Equalize	173	43	130	173	43	130
Condition	180	10	170	180	10	170

[1] Species included and recommended green stock code numbers.

Species	*Code No. for* 4/4, 5/4, 6/4	8/4
Beech	T8-C2	T5-C1
Hickory	T8-D3	T6-D1
Maple, sugar	T8-C3	T5-C2
Pecan [2]	T8-D3	T6-D1

[2] Bitter pecan (water hickory) heartwood is very difficult to kiln dry from green. Stock should be thoroughly air dried first.

Table 18. —*Basic kiln schedules for white ash, yellow birch, cherry, sweetgum, and similar woods* [1]

Moisture content at start of step	4/4, 5/4 6/4 (T8-C4)			8/4 (T5-C3)		
	Dry-bulb temperature	Wet-bulb depression	Wet-bulb temperature	Dry-bulb temperature	Wet-bulb depression	Wet-bulb temperature
Percent	*° F*	*° F*	*° F*	*° F*	*° F*	*° F*
Above 40	130	7	123	120	5	115
40	130	10	120	120	7	113
35	130	15	115	120	11	109
30	140	25	115	130	19	111
25	150	35	115	140	30	110
20	160	45	115	150	40	110
15	180	50	130	160	50	110
Equalize	173	43	130	173	43	130
Condition	180	10	170	180	10	170

[1] Species included and recommended green stock code numbers:

Species	*Code No. for:* 4/4, 5/4, 6/4	8/4
Ash, black	T8-D4	T5-D3
Ash: green, white [2]	T8-B4	T5-B3
Birch, yellow	T8-C4	T5-C3
Cherry, black [2]	T8-B4	T5-B3
Cottonwood (wet-streak)	T8-D5	T6-C4
Hackberry	T8-C4	T6-C3
Maple: red, silver	T8-D4	T6-C3
Sassafras	T8-D4	T5-C3
Sweetgum (heartwood)	T8-C4	T5-C3

[2] For green or white ash and cherry stock over 35 percent moisture content, use the green stock schedules.

Table 19. —*Basic kiln schedules for magnolia, paper birch, butternut, normal cottonwood, and similar woods* [1]

Moisture content at start of step	4/4, 5/4 6/4 (T10-D4)			8/4 (T8-D3)		
	Dry-bulb temperature	Wet-bulb depression	Wet-bulb temperature	Dry-bulb temperature	Wet-bulb depression	Wet-bulb temperature
Percent	° *F*	° *F*	° *F*	° *F*	° *F*	° *F*
Above 50	140	7	133	130	5	125
50	140	10	130	130	7	123
40	140	15	125	130	11	119
35	140	25	115	130	19	111
30	150	35	115	140	35	105
25	160	40	120	150	40	110
20	170	45	125	160	45	115
15	180	50	130	180	50	130
Equalize	173	43	130	173	43	130
Condition	180	10	170	180	10	170

[1] Species included and recommended green stock code numbers:

Species	*Code No. for:* *4/4, 5/4, 6/4*	*8/4*
Basswood (light color)	T9-E7	T7-E6
Birch, paper	T10-C4	T8-C3
Buckeye	T10-F4	T8-F3
Butternut	T10-E4	T8-E3
Chestnut	T10-E4	T8-E3
Cottonwood (normal)	T10-F5	T8-F4
Magnolia; sweetbay	T10-D4	T8-D3
Tupelo, swamp (swamp blackgum) [2]	T10-E3	T8-D2
Willow, black	T10-F4	T8-F3

[2] For swamp tupelo over 40 percent moisture content, use the green stock schedule. For water tupelo, see Dry Kiln Operator's Manual.

Table 20. —*Basic kiln schedules for yellow-poplar and cucumbertree* [1]

Moisture content at start of step	4/4, 5/4, 6/4 (T11-D4)			8/4 (T10-D3)		
	Dry-bulb temperature	Wet-bulb depression	Wet-bulb temperature	Dry-bulb temperature	Wet-bulb depression	Wet-bulb temperature
Percent	° *F*	° *F*	° *F*	° *F*	° *F*	° *F*
Above 50	150	7	143	140	5	135
50	150	10	140	140	7	133
40	150	15	135	140	11	129
35	150	25	125	140	19	121
30	160	35	125	150	35	115
25	160	40	120	160	40	120
20	170	45	125	170	45	125
15	180	50	130	180	50	130
Equalize	173	43	130	173	43	130
Condition	180	10	170	180	10	170

[1] Cucumbertree, although really one of the magnolias, is usually dried with yellow-poplar.

Table 21. –*Basic kiln schedules for black tupelo (black gum) and sweetgum sapwood (sap gum)* [1,2]

Moisture content at start of step	4/4, 5/4, 6/4 (T12-E5)			8/4 (T11-D3)		
	Dry-bulb temperature	Wet-bulb depression	Wet-bulb temperature	Dry-bulb temperature	Wet-bulb depression	Wet-bulb temperature
Percent	*° F*	*° F*	*° F*	*° F*	*° F*	*° F*
Above 60	160	10	150	150	5	145
60	160	14	146	150	5	145
50	160	20	140	150	7	143
40	160	30	130	150	11	139
35	160	40	120	150	19	131
30	170	45	125	160	35	125
25	170	50	120	160	40	120
20	180	50	130	170	45	125
15	180	50	130	180	50	130
Equalize	173	43	130	173	43	130
Condition	180	10	170	180	10	170

[1] Species included and recommended green stock code numbers:

Species	*Code No. for:*	
	4/4, 5/4, 6/4	*8/4*
Sweetgum sapwood (sap gum) [2]	T12-F5	T11-D4
Black tupelo (black gum)	T12-E5	T11-D3

[2] Lower grade sweetgum heartwood (red gum) often is included with sap gum sorts. If stock is more than 15 percent red gum, use schedules in table 18.

Table 22. —*Basic kiln schedules for basswood, aspen (sapwood or box lumber)* [1]

Moisture content at start of step	4/4, 5/4, 6/4 (T12-E7)			8/4 (T10-E6)		
	Dry-bulb temperature	Wet-bulb depression	Wet-bulb temperature	Dry-bulb temperature	Wet-bulb depression	Wet-bulb temperature
Percent	*° F*	*° F*	*° F*	*° F*	*° F*	*° F*
Above 60	160	20	140	140	15	125
60	160	30	130	140	20	120
50	160	40	120	140	30	110
40	160	45	115	140	40	100
35	160	45	115	140	45	95
30	170	50	120	150	45	105
25	170	50	120	160	50	110
20	180	50	130	170	50	120
15	180	50	130	180	50	130
Equalize	173	43	130	173	43	130
Condition	180	10	170	180	10	170

[1] Species included and recommended green stock code numbers:

Species	*Code No. for:*	
	4/4, 5/4, 6/4	*8/4*
Aspen (some collapse) [2]	T12-E7	T10-E6
Basswood (slight browning)	T12-E7	T10-E6

[2] See special schedules in Appendix C.

Specific Procedure for Air-Dried Stock

4/4, 5/4, most 6/4

(1) Bring dry-bulb temperature up to the value prescribed by schedule for the average moisture content (MC) of the controlling [8] kiln samples, keeping the vents closed and the steam spray turned off.

(2) After prescribed dry bulb temperature has been reached:

(a) If the air-dried stock had not undergone surface wetting or been exposed for a considerable period to high relative humidity, just before it was placed in the kiln, set the wet-bulb controller at the prescribed wet-bulb temperature. Turn on the steam spray only if necessary to start equalizing.

(b) If there has been surface moisture regain, set the wet-bulb controller for a 10° F wet-bulb depression and turn on the steam spray. Let the kiln run 12 to 18 hours at this wet-bulb setting, then change to the dry- and wet-bulb settings prescribed by the schedule.

8/4 (plus 6/4 oak)

(1) Bring dry-bulb temperature up to the value prescribed by the schedule for the average MC of the controlling kiln samples, keeping the vents closed. Use steam spray only as needed to keep wet-bulb depression from exceeding 12° F.

(2) After prescribed dry-bulb temperature has been reached:

(a) If there has been no surface moisture regain, set the wet-bulb controller at the prescribed wet-bulb temperature. Turn on the steam spray only if necessary.

(b) If there has been surface moisture regain, set the wet-bulb controller for an 8° F wet-bulb depression and turn on the steam spray. Let the kiln run 18 to 24 hours at this setting. Then set for a 12° F depression and run for 18 to 24 hours more before changing to the conditions prescribed by the schedule.

[8] The controlling samples usually are the wettest half of the entire group of carefully selected kiln samples (chapter 6, Dry Kiln Operator's Manual).

Specific Procedure for Partly Air-Dried Stock

414, 5/4, most 6/4

(1) Bring dry-bulb temperature up to the value prescribed by the schedule for the average MC of the controlling kiln samples. Keep the vents closed. Use steam spray only as needed to keep wet-bulb depression from exceeding 10° F. Do not, however, allow the depression to become less than 5° F or moisture will condense on the lumber.

(2) After the prescribed dry-bulb temperature has been reached, run a minimum of 12 hours on each of the first three wet-bulb depression steps of the whole schedule, but still observe the 5° F minimum wet-bulb depression. Then change to the conditions prescribed for the MC of the controlling samples.

8/4 (plus 6/4 oak)

(1) Bring dry-bulb temperature up to the value prescribed by the schedule for the average MC of the controlling kiln samples. Keep the vents closed. Use steam spray only as needed to keep wet-bulb depression from exceeding 8° F. Do not, however, allow depression to become less than 5° F.

(2) After the prescribed dry-bulb temperature has been reached, run a minimum of 18 hours on each of the first three wet-bulb depression steps of the schedule, but still observing the 5° F minimum wet-bulb depression. When the kiln conditions coincide with those prescribed by the schedule for the average MC of the controlling samples, change to the moisture content basis of operation.

Procedure for Including Small Amounts of One Species in Large Kiln Loads of Other Hardwoods

Individuals who have lumber from a log or two of their own often wish to use this lumber for paneling, cabinetry, or fine furniture. Such wood should be carefully air dried first under a good pile roof or in an unheated shed. Then, if possible, it should be kiln dried so as to bring the moisture content to about 7 percent and relieve drying stress. Such air-dried lumber can be kiln dried with the same thickness of air-dried stock of another species in the same basic kiln schedule group (table 10). The kiln schedule will have to be operated on the basis of kiln samples representing the major kind of wood in the kiln, but final mois-

ture content and stress condition should be satisfactory if the kiln operator uses a proper equalizing and conditioning treatment.

Small amounts of fully air-dried lumber (20 percent moisture content or less) can be kiln dried with air-dried stock of species that take other basic kiln schedules, but final moisture content and stress relief may not be as satisfactory as when dried with a species of its own group. If the only hardwood kiln available is drying green or partly air-dried stock, arrangements should be made to put the small amount in the kiln sometime after it is started, when the major stock and the air-dried small amount of material have about the same moisture content.

Small amounts of air-dried stock also can have their moisture content reduced to the proper level by heated room drying, which is described later. Such drying may leave the wood with unrelieved drying stresses, which can cause warping problems unless special care is exercised in the woodworking operations.

Kiln Schedule Acceleration

By shortening drying time considerably, significant energy and cost savings can be made—a possibility that should be explored by every commercial kiln operator. A step-by-step approach to kiln schedule acceleration for green stock is given on pages 124–126, Dry Kiln Operator's Manual. Under certain circumstances, several steps can be combined. For instance, the recommended schedule for red oak (4/4 thickness) is T4–D2. This is essentially the same as the basic schedule for 4/4 in table 13.

If the green moisture content is very high, the first acceleration is to change from T4-D2 to schedule T4–E2. Thus, changes in the wet-bulb depression are accelerated. Although the initial depression is the same (4° F), the 5° F depression of the second step is started at 60 percent moisture content instead of 50 percent. Then the depression goes to 8° F at 50 percent, and so on. (The dry bulb value is unchanged.)

If T4–E2 works well, for several charges, with no surface checking, the next change should be to schedule T4–E3. In this change from E2 to E3, the initial wet-bulb depression is increased. The starting depression is 5° F rather than 4° F. Subsequent wet-bulb depressions also are increased. In a kiln with well-calibrated instruments and good construction, T4–E3 should work well, but a slight amount of surface checking could occur on the entering air edges of the load.

The 50° F depression prescribed in the Manual for the latter stages of drying is only a guide. Generally the kiln operator should turn off the steam spray by a hand shut-off valve and set the wet-bulb controller so that the vents stay closed during the latter half of the drying schedule. If the wet-bulb temperature does not come down to the value shown for each step in the basic schedules, the kiln operator may want to open the vents for short periods only. When dry-bulb temperatures of 160° F or higher are reached, however, the vents should be kept closed.

Finally, one temperature acceleration is suggested for this 4/4 thickness only; when all the samples are below 20 percent, go to the final 180° F temperature. The results of all the modifications outlined above are summarized in table 23. If the oak cited above is from stock that normally is very wet when green, but has had some slight air drying, it may come down to 60 percent moisture content very rapidly. In this situation, extend the time on the first schedule step to a total of 2 days.

Not all the generally recommended kiln schedules are so conservative that they can be modified as much as the oak schedule. See Appendix A for a listing of schedules and comments for each species. A general modification that applies to all species when drying 8/4 stock is to use a final dry-bulb temperature of 180° F when the average moisture content of the controlling samples reaches 11 percent.

The question is sometimes asked: "What can be done when drying seems to stop in the middle of the kiln run?" Drying will never actually stop if the EMC of the kiln atmosphere is lower than the core moisture content of the lumber. Slight increases of dry-bulb temperature during the intermediate stages of drying can be made, but generally they are not recommended. An increase of 5° F can be tolerated, however, by some woods. In table 23, it might be satisfactory to use 115° F dry-bulb temperature at 35 percent moisture content. A temperature of

125° F dry-bulb has been used at 35 percent moisture content for 8/4 hickory (table 17, Dry Kiln Operator's Manual). When a decision is made to try such increases of temperature at moisture contents above 30 percent, the kiln operator should make sure that his kiln recorder-controller is properly calibrated.

Table 23. —*Accelerated kiln schedule for northern or upland red oak 4/4, 5/4 with a high initial moisture content (some risk of slight surface checking)*

Moisture content	Dry-bulb temperature	Wet-bulb temperature	Depression
Percent	*° F*	*° F*	*° F*
Above 60	110	105	5
60-50	110	107	7
50-40	110	99	11
40-35	110	91	19
35-30	110	([1])	[1]30
30-25	120	([1])	[1]40
25-20	130	([1])	[1]50
20-18	140	([1])	[1]50
18–(F–3)[2]	180	([1])	[1]50

[1] Vents closed, steam spray shut off, accept whatever depression occurs.

[2] Equalize and condition as in table 13. *F* is desired final moisture content.

Experimentally, some acceleration of drying of oak has been obtained by automation in connection with presurfacing and an accelerated kiln schedule (Wengert and Baltes 1971). Automation has not been adopted commercially. Pilot tests have been made, however, on presurfacing and the accelerated kiln schedule it permits (Cuppett and Craft 1972, Rice 1971). Drying time savings were estimated to be 24 percent or higher and kiln capacity was increased 8 to 12 percent. Presurfacing does not fit in with current hardwood processing practice, and there would, of course, be some added costs for the presurfacing. Further details are given under Special Kiln Schedules for Special Purposes (app. C).

Mixed Species and Simplified Schedules

When kiln drying large quantities of valuable species from the green or partly air-dried condition, the recommended practice is to dry each species, in each thickness, separately. When smaller amounts of individual species are available, as when clearing southern pine sites for planting, drying groups of species with similar characteristics together is often expedient. General suggestions for drying mixed kiln charges are given in chapter 10 of the Dry Kiln Operator's Manual.

Frequently, when using easy-drying woods for demonstration material in kiln drying short courses, several steps of the recommended schedule were omitted without causing degrade. This led to development of simplified schedules that primarily save some time for the kiln operator, but they also may reduce kiln residence time slightly. The ease of drying and the simplicity of the schedules suggest that several species can be mixed, and substantial industry experience backs this up. A classification of southern pine-site hardwoods by similarity of schedules is given in Appendix B, along with suggested simplified schedules I through VI (table B1).

This classification can also be used with the same species grown on other upland eastern hardwood sites, but the kiln operator must use judgment in applying it. For instance, commercial sapgum that contains more than 15 percent sweetgum heartwood should be dried by the red gum schedules (table 18). Tupelo from flooded or swampy sites should be dried by the water tupelo or swamp tupelo schedules. In commercial practice, these more difficult-to-dry tupelos generally are air-dried before kiln drying. Bitter pecan heartwood also is air-dried before kiln drying. Where only small quantities of rock elm are available, it can be combined with open-grown (hard type) American elm and dried by the warp-reducing schedule II. Large quantities, however, should be dried separately using the rock elm schedule (table 15). Likewise, large quantities of forest-grown soft-type American elm can be dried by schedule I, but small quantities can be mixed with hard-type elm using schedule II.

Special Schedules for Special Purposes

Aspen

Now that aspen is being used for a wider array of products than crating and rough lumber, consideration must be given to minimizing collapse. This defect is a principal problem in drying aspen. Special schedules for 4/4 and 8/4 No. 2 and 3A Common lumber are given in Appendix C. The uppermost grades of lumber sawed from the outside of

larger logs, as well as crating lumber, can still be dried by the schedules in table 22. A Canadian schedule for faster drying of studs is mentioned in chapter 6 on High-Temperature Drying.

Sugar Maple

Schedules are sometimes needed to keep maple sapwood the whitest color possible and to dry maple containing mineral streak with the least amount of honeycombing. The special schedule for white maple given in appendix C has been used successfully on 4/4 and 5/4 stock (McMillen 1976). When drying 4/4 maple that contains mineral streak or other character marks, many kiln operators satisfactorily use the regular wet-bulb depression schedule, C3, with a lower-than-customary temperature schedule, either T5 or T3. See page 118, Dry Kiln Operator's Manual for these separate schedules and the method of their assembly.

For 6/4 and 8/4 mineral-streak stock, see the special procedure suggested in appendix C.

Fine internal hairline checks that do not show up in 8/4 and thicker maple until manufacture or use have sometimes been a costly problem in maple. These are believed to be caused by stresses resulting from surface moisture regain and improper redrying of previously kiln-dried stock. The first preventative is to store kiln-dried maple in a manner to prevent regain (see chapter 9 on Storage of Dried Lumber). If this has not been done, see the special schedules for adjusting moisture content of kiln-dried wood.

Bacterially Infected Oak

Lumber from northern red oak and black oak infected with anaerobic heartwood bacteria is highly susceptible to internal checking when dried by normal or accelerated oak schedules. Both honeycombing and ring separation occur (Ward 1972; Ward et al. 1972). Research has shown that material in the advanced stage of infection is especially subject to surface checking and honeycombing. Such wood should be sawed into 4/4 rather than thicker lumber. Good results were obtained when such material was forced air dried to 20 percent MC by an 8/4 oak procedure (Cuppett and Craft 1975), and then kiln dried by the balance of the schedule given in appendix C. Almost as good results were obtained when kiln drying was started at 25 percent MC. Low air velocity was used, and the fans were run only half the time for the first 11 days of forced air drying. Material in an early stage of infection was successfully kiln dried from the green condition by the schedule in appendix C.

Presurfaced 1-Inch Upland Red and White Oak

The suitability of an accelerated kiln schedule for fully presurfaced upland red and white oak was confirmed by research at the U.S. Forest Products Laboratory (McMillen 1969, McMillen and Baltes 1972, Wengert and Baltes 1971). Drying time can be reduced 25 to 50 percent by the fully accelerated schedule and kiln capacity is increased 8 to 12 percent by the presurfacing. Slight additional benefits are obtainable by automation, but full benefits of the accelerated schedule are not available without automation. The schedule is not applicable to presurfaced green cherrybark oak, a common southern oak, but can be applied to such stock carefully dried by other means to 40 percent moisture content. Successful field tests of the presurfaced oak schedule have been carried out with northern red and mixed Appalachian red oak in Massachusetts and West Virginia (Rice 1971, Cuppett and Craft 1972).

The accelerated schedule, modified for kiln sample operation, is given in Appendix C. This is for oak fully surfaced in the strictly green condition to remove all saw marks, not to material that is merely blanked or skip dressed to obtain uniform size. The thickness after complete surfacing probably should be 33/32 inch to insure kiln dry dimension cuttings 13/16 inch thick. Rough sawing would have to be to a l-5/32-inch thickness (see McMillen (1969) for further suggestions).

Warp and Shrinkage Reduction

A number of measures for warp reduction are indicated in chapter 2. A major one is to use rapid natural air drying or accelerated-air drying of properly piled lumber. Research on red oak has shown that shrinkage is reduced by using lower temperatures and rapid reduction of relative humidity (McMillen 1963). The effect is uniform from 140° F down to 95° F. From 95° F down to 80° F the effect is greater because more of the wood is affected by tension set. Tension set tends to resist shrinkage of the board and thus reduces warping. This is a major part of the reason why air drying gives the least shrinkage and

warping. Compression set in the interior of the wood is also important, as it tends to increase board shrinkage and warping. Thus, the drying of green oak with an initial temperature above 110° or 115° F would be expected to produce more than normal warping.

The effects of uniform thickness, good stacking, and restraint may overcome the effects of temperature differences with 4/4 stock. No significant difference was detected in the warp of 1-inch green sugar maple with initial temperatures of 110° to 160° F when the same EMC was used in all runs (Rietz 1969). For thicker stock, in which compression set probably has more influence, use of lower than customary initial temperature and relative humidity probably is helpful.

No series of low-shrinkage, low-warp schedules have been developed. The kiln operator who has the kiln time available to take slightly longer in drying can experiment with lower relative humidity schedules by using slightly larger initial wet-bulb depressions. The lower the wet-bulb temperature, the easier it is to achieve a lower dry-bulb temperature in the kiln. Changes from recommended *or* basic schedules should be slight at first, and the kiln operator will need to observe the stock in the kiln frequently to see that surface checking is not developing. Any such experimentation, of course, should be done only with the advice and consent of the management.

Adjusting Moisture Content of Kiln-Dried Wood

Once wood has been kiln dried to a moisture content suitable for interior purposes, it should be stored in a heated or dehumidified shed or room (see Chapter 9, Storage of Dried Lumber). Situations occur, however, when the moisture content of the lumber must be changed: (a) the moisture content is too low for use in steam bending, boat construction, or the like, or (b) the wood has not been properly stored and must be redried.

If the moisture content is too low, a two-step procedure is advised. The lumber must be stickered in properly built piles and the void spaces of the kiln baffled. The exact schedule will depend on the moisture content desired and the time available. Allow 2 days for each step for 4/4 stock, longer for thicker material or large moisture differences, For the first half of the time required, use a kiln EMC equal to the desired moisture content. For the second half use an EMC 3 percent higher. If enough time is available, use a kiln temperature of 130° or 140° F. For quicker results, 160° or 180° F can be used. In either case, the vents should be closed during kiln warm-up. Steam spray should be used intermittently to avoid EMC's lower than the present moisture content or higher than the desired moisture content during the warm-up period. Do not condense moisture *on* the lumber. Use the kiln sample procedure to monitor the moisture pick-up. If the rate is too slow, use a higher temperature with the same EMC's. The moisture level to which hardwoods can be easily raised is limited to about 13 percent, for it is difficult to hold an EMC higher than 16 percent in most kilns.

To redry kiln-dried lumber that has been kept in uncontrolled storage, great care is needed. Otherwise surface checks that were tightly closed may become permanently opened, or internal hairline checks can occur. If the storage period has been short, tightly bundled lumber can be redried in the bundles because most of the moisture pick-up will have been on the board ends and the surfaces of exposed boards. For longer storage, or for lumber that has been kept outdoors on stickers, the lumber must be stickered for redrying.

Two temperature steps are suggested for the redrying operation; the first about 1 day long at 130° or 140° F. The second should be at the final temperature of the drying phase of the basic schedule (tables 12 to 22) for the species and size involved. Do not use steam spray during kiln warm-up. Surface checks already present may open up, but will close again as the wood dries. When the first kiln temperature is reached, set the wet-bulb controller to achieve an EMC somewhere between the current moisture content of the stock and the moisture content desired. For the final step, set the controller to give an EMC 2 percent below the desired moisture content. When the wettest kiln sample reaches the desired moisture content, stop the drying, No conditioning should be needed.

Predicting Drying Time

Frequently management is faced with determining how long it will take to dry a load or when the next change in kiln conditions can be made.

"How long before the next change" can be easily answered if the operator will graph the moisture content of the samples as they dry (fig. 13). To make this job easy, special graph paper can be obtained which has horizontal markings in tenths of an inch and vertical markings in twelfths. With such paper, it is easy to show drying time to days and hours. By graphing the moisture content of the samples as they are weighed, a smooth drying curve is obtained. Any portion of this curve can be extended 24 hours ahead with a straight line to predict the approximate moisture content the next day. In fact, when the same species and thickness is dried repeatedly, the total drying time can be reasonably well estimated.

Early in a kiln operator's career at a given location, he may find it helpful to develop basic drying curves. He should use his own sample data for green or nearly green stock of various species and thicknesses. For any subsequent charge of lumber dried from a lower initial moisture content, the drying curve of the first day or two would generally parallel the line for the first day or two of the green curve. After that the drying of air-dried or partly air-dried stock will follow fairly closely the curve for the green stock.

Since it will not be practical to establish green stock drying curves for all thicknesses of lumber right away, approximate curves can be estimated. These can be set up using drying time factors for the most common thicknesses. One such set of factors was developed by Higgins to predict total drying time. Such factors have a theoretical base related to diffusion and other aspects of wood drying, but these were empirically developed after several years of experience in commercial drying of foreign and domestic woods. They are roughly corroborated by other commercial drying time data. The drying time factor for 8/4 stock was set at 1.00 because the best approximations for other thicknesses were obtained when the 8/4 drying time data

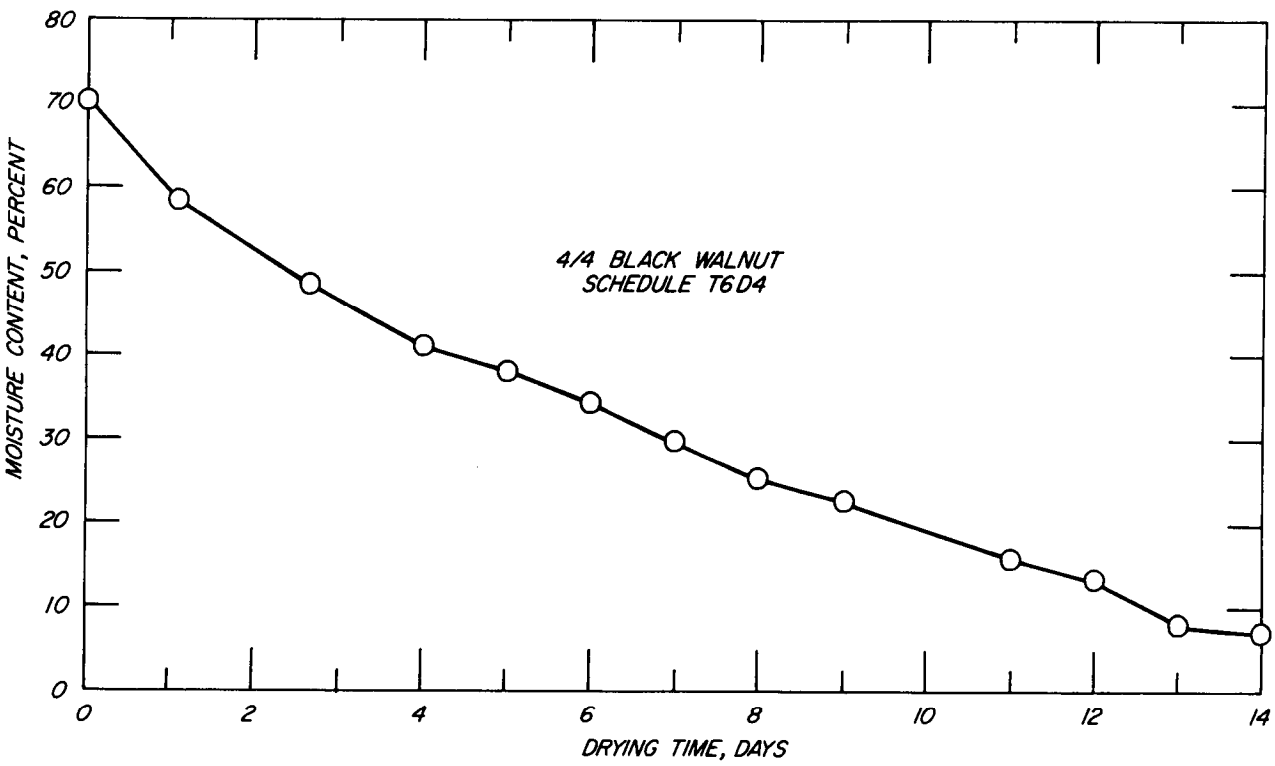

M 143471

Figure 13.—Black walnut drying curve.

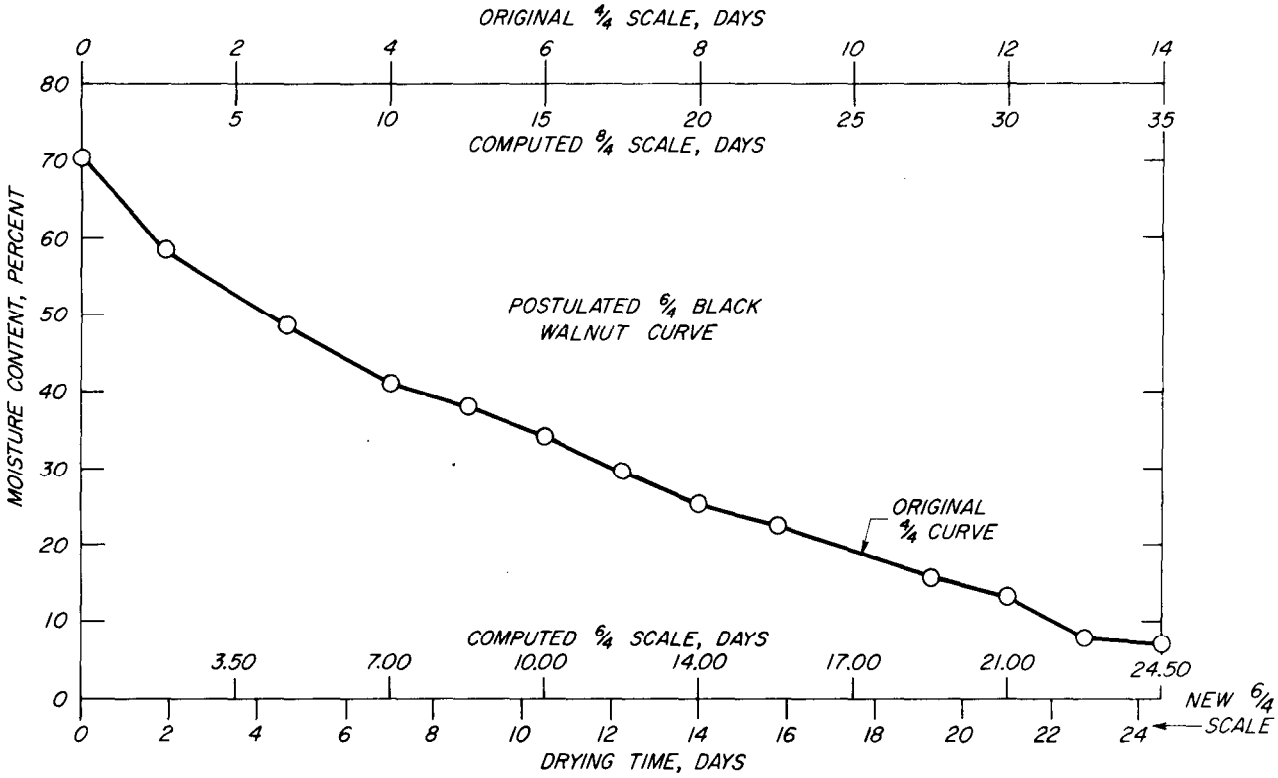

M 144693

Figure 14.—Method for postulating a drying time scale for a new thickness of a given species to be dried from a known drying curve.

were used as a base. Actual drying times will vary, of course, depending on actual thickness, width, percentage of heartwood, and quality of stock.

Until more precise factors become available, the ones developed by Higgins can be used in setting up the preliminary curves to estimate drying time from various moisture levels. These factors are as follows:

Thickness	*Drying time factor*
3/4	0.25
4/4	.40
5/4	.55
6/4	.70
8/4	1.00
10/4	1.35
12/4	1.75
14/4	2.25
16/4	2.85

The factors for 4/4 and 8/4 indicate that 2½ times as long will be required to dry 8/4 material as 4/4.

To employ these factors in developing a set of drying curves for a species, the kiln operator should use either his own 8/4 curve or a 4/4 curve obtained when a conservative schedule was used. Time and moisture content scales should be selected so that the slope of the curve is between 30° and 48° F. The first step in using a 4/4 curve as a base would be to list the 8/4 drying times directly below the 4/4 times. Then compute the drying times at the same moisture levels for the other thicknesses. From figure 13, some of the times would be as follows:

Thickness	*Factor*	*Drying times-days*			
4/4	(Given)	2	6	10	14
8/4	([9])	5	15	25	35
5/4	0.55	2.75	8.25	13.75	19.25
6/4	.70	3.50	10.50	17.50	24.50
10/4	1.35	6.75	20.25	33.75	47.25

[9] Time for 8/4 = 1.00 ÷ (factor for given thickness) × given time; in this example, 8/4 time = $\frac{1.00}{0.40}$ × given time = 2.5 (given time).

At the start, a separate graph should be used for each thickness. An example for walnut 6/4 is shown in figure 14. Write the computed drying times for 8/4 and for the selected thickness on the graph in pencil. Then interpolate whole number days for the selected thickness with a pen and erase the pencil values. As successive charges are dried and

drying time improved by satisfactory accelerations, new lines can be drawn on this graph. When sufficient experience has been gained, and any program of schedule improvement completed, a new graph can be made using the average of the actual curves. Ultimately the kiln operator can make up one curve and a composite time scale for each thickness on one graph. A crucial point, however, is the fact that hardwoods of varying quality cannot be dried by time schedules. The kiln operator must revert to the moisture content schedule when he is in doubt about the drying characteristics of a particular charge.

A side benefit of such a finalized drying graph is that any subsequent charge of normal stock having a slower drying rate will indicate the kiln may not be operating properly. It may have a malfunctioning instrument, a water- or air-bound steam line, an inoperative fan, or some similar fault, and may need maintenance. A comparison of graphs over a period of time should also show any slow loss of efficiency in the kiln.

Equalizing and Conditioning

Frequently in kiln drying, and especially with mixed species, sizes, or initial moisture levels, some lumber in a charge is as dry as

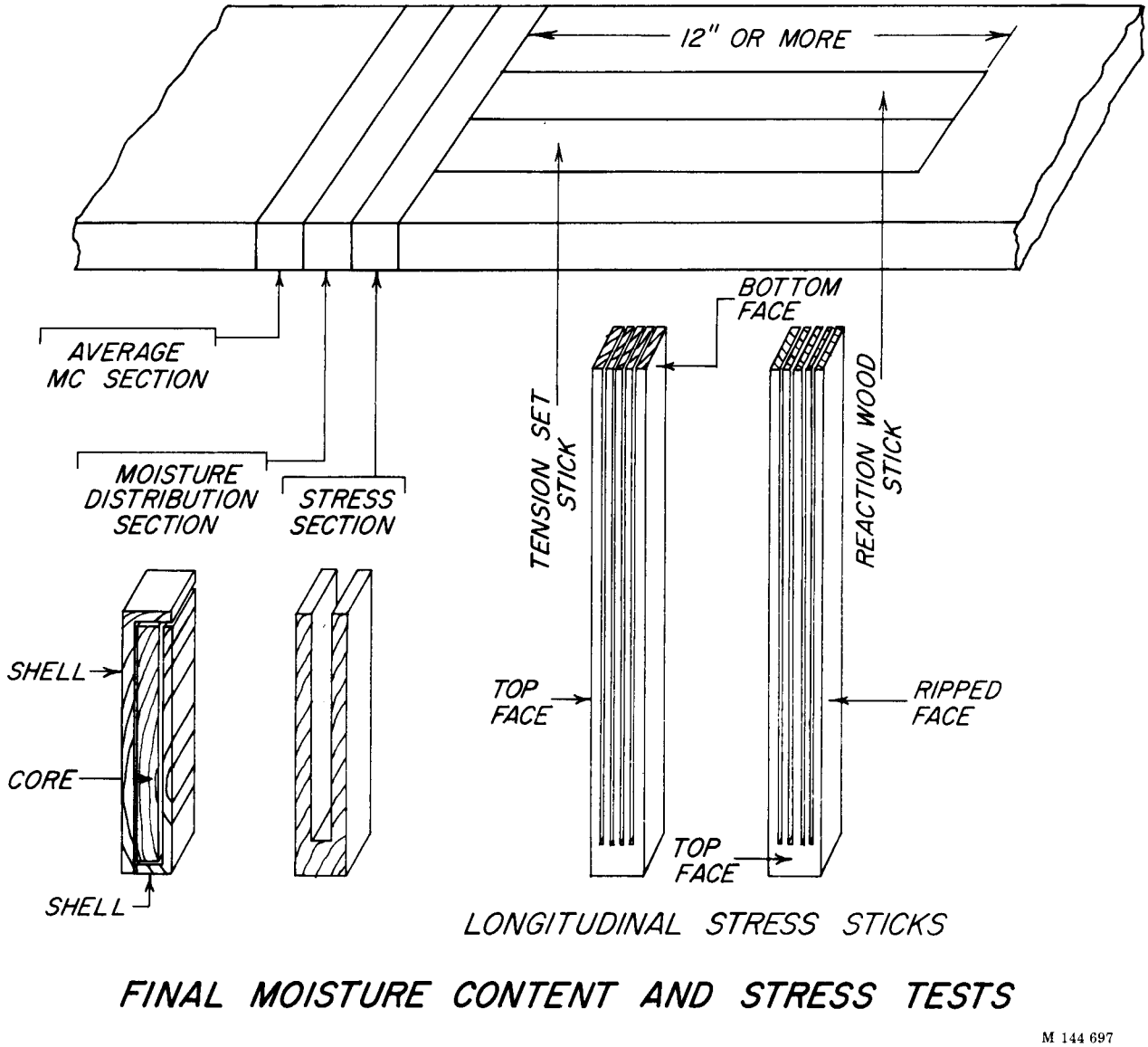

Figure 15.—Method of cutting final moisture content and drying stress tests.

required while other lumber is still too wet. An equalizing treatment reduces the spread between the wettest and driest boards. Drying stresses and sets (often called casehardening) are always present at the end of kiln drying and equalizing. Any lumber that will be resawed, ripped, or machined nonuniformly should be conditioned to relieve stresses. Failure to do so will result in warping (cupping, crooking, or bowing) *during* or *immediately after* machining and will cause difficulty in boring.

The normal procedures for equalizing and drying stress relief are described in the last parts of chapters 8 and 10 of the Dry Kiln Operator's Manual. Figure 15 shows a method of cutting final moisture content and longitudinal as well as transverse stress tests. The kiln operator's attention is especially drawn to the method of evaluation of casehardening in chapter 10 of the Manual. A final analysis for freedom from stress cannot be made until the test prongs have air dried for 16 to 24 hours, but a significant turning out of the transverse test prongs immediately after they are cut often indicates that the transverse stresses have been relieved.

It was formerly considered that dense hardwood 4/4 lumber required 16 to 24 hours to condition. Conditioning has high energy demands, so the time should be no longer than needed to get stress relief. Several low-density imported woods have been successfully conditioned by equalizing at 1 percent lower moisture content than the recommended procedures in the Manual, then conditioning 6 hours at the regular EMC (McMillen and Boone 1974). This short-cut has been successfully used on sugar maple sapwood in kiln-drying demonstrations, taking about 8 hours. Red oak 4/4 reportedly has been conditioned in 13 hours.

If the average moisture content determinations are made immediately after the conditioning treatment, the moisture content obtained will be about 1 to 1.5 percent above the desired value because of the surface moisture regain. After cooling, the average moisture content of the lumber should be close to that desired. The general rules of the conditioning procedure do not apply to moisture content values above 11 percent. Conditioning is hard to accomplish at the higher values.

The important factor in conditioning is to obtain the specified EMC. The simplest way is to use an equalizing dry-bulb temperature that is lower than the dry-bulb temperature for conditioning. At the end of equalizing, the heating coils are shut off. The wet-bulb controller is then set up for the conditioning wet-bulb temperature. As the steam spray raises the wet-bulb temperature, the dry-bulb temperature also will rise some. When the wet-bulb temperature reaches the desired level, the dry-bulb controller is set to its prescribed value. Only one heating coil should be turned on. Both the dry-bulb and the wet-bulb temperatures should reach and remain at the desired levels for conditioning.

The equalizing and conditioning temperatures shown in the basic kiln schedules (tables 12–22) are selected to utilize the above procedure and give stress-free wood at a final 7 percent moisture content. For other desired final moisture content levels, use temperatures to equalize at an EMC 3 percent below the desired moisture content and to conditions at 4 percent above the desired moisture content. If equalizing is expected to be prolonged, use the reduced dry-bulb temperature only the last 12 to 18 hours of equalizing.

The conditioning time could be unduly lengthened if high-pressure steam is used for conditioning and no special measures were taken to reach the correct wet-bulb depression. A desuperheater should be used in the steam line to remove the excess heat. (See Operational Considerations.)

Occasionally, the transverse prong test will show no stress, but the lumber will bow when resawed. The cause of the bowing is longitudinal stress resulting from either longitudinal tension set in the surface zones or longitudinal shrinkage differentials due to reaction wood (tension wood in hardwoods). These stresses are most likely to be unrelieved when conditioning temperature or EMC is too low or when conditioning time is too short. The longitudinal stress sticks in figure 15 will show whether such stresses are present. If stresses are a problem, conditioning should be at 180° F or higher. The lumber must have been equalized, and the recording instrument must be in calibration. If longitudinal stresses are still a problem, the wet-bulb setting can be raised 1° F over the recommended

value. Also, the conditioning period can be extended about 4 hours per inch of thickness. If tension wood stresses are very severe, they may not yield to any conditioning treatment.

Operational Considerations

An extensive discussion of considerations for operating a dry kiln is given in chapter 10 of the Dry Kiln Operator's Manual (1961). That chapter presents several aspects of kiln operation, other than selection of the schedule to use, to aid the operator in exercising good judgment. Of particular interest, in view of the greater need to conserve energy and material now than heretofore, are the suggestions on starting the kiln, restricted use of steam spray during kiln warm-up, and operating the kiln after warm-up.

Additional information is given in this handbook on the important heating, venting, and air circulation equipment, on humidity control with high-pressure steam, and part-time drying.

Heating, Venting, and Air Circulation

Many older kilns were designed for drying air-dried hardwoods. Usually these kilns cannot dry green hardwoods very efficiently—they have inadequate heating, humidification, and circulation systems. Many older kilns have inadequate venting for the rapid drying of green stock of faster drying species.

It is easy to determine if a kiln is short of heating capacity—it will take more than 4 hours to reach the desired elevated temperature. If there is adequate circulation and other equipment is functioning properly, the kiln manufacturer can add more heating pipe or ducts.

A kiln with inadequate humidification will be unable to condition lumber adequately—the steam or water spray will be running all the time but a 10° F depression cannot be obtained. If there is little or no superheat, if the vents are closed tightly, if there are no leaks in the structure, and if the spray line and holes or nozzles are not plugged, a larger steam supply is needed. Increasing only the pressure will increase the superheat and may not solve the problem.

It is important to have adequate venting capacity. Failure to exhaust moist air rapidly will cause the wet-bulb temperature to be higher than the schedule requires. The result is slow drying. For some species, like hard maple, the risk of stain and discoloration is increased. Restricted use of steam spray during kiln warm-up is very helpful, but vents are inadequate if desired depressions cannot be easily obtained a few hours after they are set on the instrument. Venting can be increased by increasing vent size or by power venting.

Power venting is the discharging of humid air from or the injection of air into a kiln by fans or blowers and suitable duct work installed by the kiln manufacturer. One aim is to increase the venting rate of a kiln when the regular vents cannot conveniently be enlarged. Another aim is to conserve energy. To conserve energy, care must be taken to place the power vents so that the humid air is discharged before the kiln air passes over the heating coils.

A poor air circulating system is evident by a wide range of final moisture content values in the charge and uneven drying. If air velocity measuring instruments are available, poor circulation will be indicated by velocities below 200 feet per minute (ft/min) or by differences between the highest and lowest velocities greater than 150 ft/min (measured on the leaving-air side of the load). The recommended kiln schedules are based on a velocity through the load of 200 to 400 ft/min, and probably are as satisfactory with velocities up to 450 ft/min. Any improvement in circulation will improve heating and venting, however. Increasing the velocities in the early stages of drying to 500 ft/min or so will accelerate drying, but will increase the risk of surface checking with check-prone species like oak or beech. This can be compensated for by decreasing wet-bulb depressions 1° F. Thorough baffling to prevent "short circuiting" of air will greatly improve circulation. Changes in fan speed and design usually require advice of a kiln engineer.

Humidity Control With High-Pressure Steam

Some hardwood dry kilns are heated with high-pressure steam (80 to 100 pounds per square inch (lb/in^2) or higher). High-pressure steam is excellent for economy in heating

coils because of lower initial cost, less fin radiation area required, and smaller steam feed lines and heat control valves than a low-pressure kiln operating at 10 lb/in^2. However, the heat in high-pressure steam makes it unsuitable for use in the humidity spray system. The steam is so hot and so very dry that it raises the dry-bulb temperature in the kiln excessively when the wet-bulb temperature is raised; consequently, it is impossible to carry a 4° or 5° F wet-bulb depression during the initial stages of some schedules, or to get a 10° F wet-bulb depression for conditioning and stress relief at the end of a charge. Modifying the conditioning procedure, as described in a preceding section, is helpful if the steam pressure is not too high. For steam pressures of 100 lb/in^2 and over, however, a desuperheater is needed.

A desuperheater unit supplies low-pressure wet steam, cooled to the saturation point, for the humidity spray system. A suitable pressure-reducing valve brings steam pressure down to approximately 5 lb/in^2. This very hot low-pressure steam is then mixed with water spray in a suitable mixing chamber, and the extra superheat is absorbed by converting some of the water into steam.

Part-Time Operation

In past years some mills and factories generated their own electricity with steam developed by burning wood waste. Often they used the exhaust steam to operate the dry kilns. The steam was available only during working hours, so the kilns were operated on a part-time basis, that is, 8 or 9 hours per day, 5 days per week. Other firms burned wood waste to generate ordinary steam for their kilns and frequently used coal, oil, or gas during nonworking hours. Now that fossil fuel costs have risen greatly, such firms are considering part-time operation for periods of slack product demand. Such operation also could be considered for periods when demand is higher, if a greater proportion of the wood were dried from the air-dried instead of the green or partly air-dried condition.

Part-time drying is technically feasible on air-dried stock and can be done successfully with green or partly air-dried stock when proper care is used in schedule application and operating procedures. Rasmussen (1961) recommended full-time drying during the first stages of drying refractory hardwoods when excessive checking occurs during part-time operation.

Part-time drying takes almost twice as long to dry an item as does full-time operation. Under the experimental conditions used, Rasmussen and Avanzado (1961) found that full-time operation required slightly less total energy (4,510 British thermal units per pound of water (Btu/lb H_2O) evaporated) than part-time operation, either with fans running all the time (5,490 Btu/lb H_2O) or only during heat and spray control periods (5,560 Btu/lb H_2O). The material dried was rough 4/4 red oak lumber. Drying quality was the same by all methods. Drying times, from 70 to 7 percent moisture content, were 18 days for full-time, 35½ for part-time with fans continually running, and 46½ days for part-time with restricted fan use.

In the report on the above described experiment, the authors stated that making the kiln schedule more severe for part-time operation would not be expected to reduce drying time greatly.

Wolfe (1962, 1963) used temperatures during the "operating" hours as much as 15° F above established kiln schedule temperature. He also used the fans and some venting during "off' hours. He concluded part-time operation was economical under regular production circumstances.

The technology of part-time drying has not been well enough established to include schedules and drying time in this publication.

Drying Time

The time required to kiln dry a given species and thickness depends upon the character of the wood, the type of kiln, and the kiln schedule used. The time estimates given in table 24 are generally minimum times that can be obtained in well-maintained commercial kilns with relatively short air travel. They also are based on the assumption that the operator will take some steps to increase drying rate. The times will vary a half to a full day from kiln to kiln. Kilns with longer air travel, with less than 200 ft/min air velocity, or in a poor state of maintenance will take longer in drying green stock. They may not take much longer than the table values for airdried stock.

By drying to 6 percent average moisture content or slightly lower, moisture content will finalize at about 7 percent after equalizing and conditioning. If a greatly different moisture content is desired, proper adjustments in conditions must be made, and total times will differ from the table values. The time estimates in table 24 are for the drying of stock for high-quality uses. If considerably more severe conditions than the basic schedules are used, time will be shortened, but quality may be decreased.

The drying times in the table are for precisely sawed rough green material 11/8 inches thick, plus or minus 1/8 inch. Miscut lumber with some of greater thickness will, of course, take longer to dry. For estimates of the effect of other thicknesses on drying time, see the subsection on Predicting Drying Time under Operational Considerations.

Table 24 .—*Approximate kiln-drying times* [1] *for 4/4 hardwood lumber in conventional internal fan kilns*

Species	Time required to kiln dry from		Species	Time required to kiln dry from	
	Air-dried condition [2]	Green condition		Air-dried condition [2]	Green condition
	Days	*Days*		*Days*	Days
Apple	4	10	Magnolia	4	8
Ash, black	4	7	Mahogany	4	10
Ash: green, white	4	10	Maple: red, silver (soft)	4	7
Aspen	3	9	Maple: sugar (hard)	5	11
Basswood (slight browning)	3	6	Oak: red, northern or upland	5	21
Basswood (light color)	4	9	Oak: white, northern or upland	5	23
Beech	5	12	Oak: red or white, southern lowland	6	([3])
Birch, paper	2	4	Osage-orange	6	14
Birch, yellow	5	12	Pecan	4	([3])
Buckeye	3	6	Persimmon, common	5	12
Butternut	5	10	Sweetgum, heartwood (red gum)	6	15
Cherry	5	10	Sweetgum, sapwood (sap gum)	4	10
Chestnut	4	8	Sycamore	4	8
Cottonwood, normal	4	8	Tupelo, black (black gum)	4	8
Cottonwood, wet-streak	4	10	Tupelo, swamp	5	10
Dogwood	5	12	Tupelo, water	5	([3])
Elm: American, slippery	4	9	Walnut, black	5	11
Elm: cedar, rock	5	13	Willow	4	10
Hackberry	4	7	Yellow-poplar	3	6
Hickory	4	10			
Holly	5	12			
Hophornbeam, eastern	6	14			
Locust, black	6	14			

[1] Approximate times to dry to 6 percent moisture content, prior to equalizing and conditioning, in kilns having air velocities through the load of 200 to 450 feet per minute.

[2] 20 percent moisture content for most woods; 25 percent slow-drying woods like oak, pecan, hickory.

[3] These items should be air dried before kiln drying,

Literature Cited

Cuppett, D. G. and E. P. Craft
1972. Kiln drying of presurfaced 4/4 Appalachian oak. For. Prod. J. 22(6):86.

Higgins, N. C.
n.d. A rule-of-thumb method for estimating drying time. Release 8,023, Coop. Exten. Serv., Dept. For. Prod., Mich. State Univ., East Lansing, Mich.

McMillen, J. M.
1963. Stresses in wood during drying. USDA For. Prod. Lab. Rep. FPL 1652.

McMillen, J. M.
1969. Accelerated kiln drying of presurfaced 1-inch northern red oak. USDA For. Serv. Res. Pap. FPL 122. For. Prod. Lab., Madison, Wis.

McMillen, J. M
1976. Control of reddish-brown coloration in drying maple sapwood. USDA For. Serv. Res. Note FPL-0231. For. Prod. Lab., Madison, Wis.

McMillen, J. M. and R. C. Baltes
1972. New kiln schedule for presurfaced oak lumber. For. Prod. J. 22(5):19–26.

McMillen, J. M. and R. S. Boone
1974. Kiln-drying selected Colombian woods. For. Prod. J. 24(4):31–36.

Rasmussen, E. F.
1961. Dry Kiln Operator's Manual. U.S. Dep. Agric., Agric. Handb. 188, 197 p., illus.

Rasmussen, E. F. and M. B. Avanzado
1961. Full-time or part-time kiln drying? Comparison of the energy, drying time, and costs. South. Lbrmn. (Dec. 15) 203(2537):99–104.

Rice, W. W.
1971. Field test of a schedule for accelerated kiln drying of presurfaced 1-inch northern red oak. Mass. Agric. Exp. Stn. Res. Bull. 595.

Rietz, R. C.
1969. Influence of initial drying temperatures on development of warp in one-inch hard maple. For. Prod. J. 19(7):37–40.

Ward, J. C.
1972. Anaerobic bacteria associated with honeycomb and ring failure in red and black oak lumber. Phytopath. 62(7):796.

Ward, J. C., R. A. Hann, R. C. Baltes, and E. H. Bulgrin
1972. Honeycomb and ring failure in bacterially infected red oak lumber after kiln drying. USDA For. Serv. Res. Pap. FPL 165. For. Prod. Lab., Madison, Wis.

Wengert, E. M. and R. C. Baltes
1971. Accelerated oak drying by presurfacing, accelerated schedules, and kiln automation. USDA For. Serv. Res. Note FPL-0214. For. Prod. Lab., Madison, Wis.

Wolfe, C. L.
1962. Part-time kiln operation. South. Lbrmn. 205(2555):41–2.

Wolfe, C. L.
1963. Another method of part-time kiln operation. South. Lbrmn. 206(2569):33,36.

CHAPTER 6
HIGH-TEMPERATURE DRYING

High-temperature kiln drying of wood has been explored for many years. It is similar to conventional kiln drying, but operates at temperatures of 212° F or higher. Technically, high-temperature drying includes two processes. In superheated steam drying, the wet-bulb temperature is maintained at 212° F and air is excluded. In the other, a mixture of air and steam is used, and the wet-bulb temperature is below 212° F, often with no precise control. Current use of high-temperature drying in the United States involves only the latter process.

In the last 20 years, high-temperature drying has become acceptable to accelerate the drying of many softwoods. Most of the new kilns being installed for southern pine lumber in the United States are high-temperature kilns. What are the prospects for high-temperature drying of hardwoods?

Hardwood high-temperature drying technology has not advanced enough to permit recommendations, but the prospects are probably good enough that anyone planning to install new kilns should consider equipment suitable for ultimate use of the process. Drying rates two to five times those of conventional methods make high-temperature drying very attractive. Because of increased drying speed, dry kilns could be smaller than conventional kilns and still handle the same annual volume of lumber. Smaller kilns would permit more flexibility in drying (less mixing of species, faster loading and unloading) and require less space. Due to faster turnover, inventory could be reduced, resulting in savings on interest, insurance, and taxes. Last, but not least, high-temperature drying would require 25 to 60 percent less energy than conventional kiln drying. Because there would be some added capital investment for extra insulation, kiln tightness, a larger capacity heating system, and larger capacity fans, direct costs of drying per thousand board feet would not be cut in half, but it has been estimated they would decrease by 20 percent or more (Wengert 1972).

High-temperature drying has been commercially used in Europe for hardwoods previously air dried. Research in Eastern Canada and the United States has indicated that the process would be technically feasible for air-dried hardwoods of many U.S. species. It is technically applicable to green hardwoods of very permeable species.

Most of the 20 species of hardwoods listed in of high-temperature drying (Wengert 1972) developed more drying defects under high-temperature drying than under conventional temperature drying. The principal defects were collapse, end checking, and honeycombing. If dried from the air-dried condition, such defects were absent or almost so. Another defect that is common to high-temperature drying is discoloration. This is usually a toast-brown color which, with some species, is a very thin layer, and with others is not. While these defects may largely prevent the high-temperature drying from being used for highest quality hardwood uses, they should not preclude the use of the process for hardwoods suitable for construction purposes and other nonexacting uses.

Basic Concepts

A. In theory the high-temperature kiln drying process has three distinct stages when used on green wood: (1) the constant drying rate; (2) the first falling rate; and (3) the second falling rate (Lowery, Krier, and Harm 1968). In the first stage, moisture moves toward the wood surface predominately by mass flow. Rapid evaporation of moisture at or near the surface keeps the wood temperature at the wet-bulb temperature. Only the sapwoods of low- to medium-density hardwoods are likely to be permeable enough to sustain the first stage very long.

When the wood can no longer supply free water to the entire surface area, the first falling rate starts. It continues until the free water is gone. The temperature of the wood is between the wet-bulb and the dry-bulb temperatures of the kiln. The length of both the constant and first falling rate periods are

govered by the permeability of the wood, while the final stage (as well as normal drying) is more influenced by the diffusivity. When the free water is gone, the second falling rate starts. The drying slows considerably more, and the wood temperature rises approximately to the dry-bulb temperature.

B. Both the rate of moisture movement and the rate of evaporation are greatly increased by the high temperatures. During the first two stages, the rate of drying is determined almost solely by the rate of heat transferred to the wood. Very high air velocities are needed to maintain this high rate of heat. transfer as well as to remove the evaporated water from the surface.

C. No mater what the relative himidity is in the high-temperature kiln, the kiln conditions are severe (EMC cannot exceed 7 percent at 230° F). As a result, a high-temperature kiln, after being heated to 212° F at the start, can be operated without concern for the wet-bulb temperature until the conditioning. Unless the wood being dried is very wet and very permeable, venting is unnecessary. This is one of the major energy-saving aspects of the process.

D. After the first stage of drying, steep moisture gradients can develop; these gradients can, in some cases, cause severe drying stresses and checking. Stresses in unchecked high-temperature-dried wood can be relieved easily, but stress relief must be done below 212° F and with properly equalized material, as is normally required.

E. The equilibrium moisture content of high-temperature-dried wood is somewhat lower than that of conventionally dried wood.

F. The exposure of wet wood to high temperature causes both temporary and permanent reductions in strength of the wood. The shortness of the drying time achieved by the use of high-air velocities in presentday kilns is an alleviating factor and makes obsolete results of some older studies on strength. This area needs further evaluation.

Research and Practice to Date

The first research on high-temperature drying of hardwoods in the United States, by Tiemann (1918), was done with superheated steam. Basswood and sweetgum sapwood were dried successfully, but other hardwoods were not. Commercial superheated steam kilns were used for softwoods on the West Coast about 1918, but they deteriorated so badly under the severe drying conditions that their use was discontinued. Subsequent research by Richards (1958) and John L. Hill[10] indicated good results when drying a variety of air-dried southern hardwoods but poor results when drying the same hardwoods from the green condition. Their drying equipment had no humidity supply. These results and the likelihood of discoloration, strength losses, and other degrading factors discouraged further research on high-temperature drying of hardwoods in the United States at that time.

Research went on elsewhere, confirming the general suitability of the method for air-dried hardwoods and bringing out other favorable aspects of the process. Noteworthy reviews of this research were prepared by Kollmann (1961); Lowery, Krier, and Harm (1968); Wengert (1972); and Cech (1973). Kollman (1961) reported use of high-temperature dryers in many German woodworking plants. These generally used air-steam mixtures rather than superheated steam.

The commercial use of high-temperature drying for softwoods began slowly in the United States (Kimball and Lowery 1967, Lowery and Kimball 1966). It developed rapidly after tight prefabricated kilns became available and the manufacture of housing studs became big business. During this development, rapid heating of the kiln to operating temperature was found advantageous both to save time and minimize degrade. Meanwhile, research by various investigators, as reviewed by Lowery, Krier, and Harm (1968), indicated some hardwoods could be high-temperature-dried from the green condition if heating up was rapid under saturated steam conditions.

A commercial trial of high-temperature drying of hardwoods confirmed the applicability of the process to air-dried sapwood of sweetgum in which the redgum (heartwood)

[10] Presented at Forest Products Research Society Annual Meeting, Madison, Wis., June 1958.

portions are below 25 percent MC.[11] The Eastern Forest Products Laboratory of Canada had done considerable research on high-temperature drying of birch and maple over the years; Cech (1973) reported a most favorable procedure was to force-air dry the stock to 20 percent MC, then kiln dry at 212° F. Similar results were obtained with red oak when the high-temperature portion was kept at 200° F. Some of the research on birch, however, had shown possibilities for high-temperature drying after very brief airdrying or predrying periods.

In a screening study to determine at what moisture level a wide variety of U.S. hardwoods could safely start high-temperature drying, Wengert (1974) heated the kiln very rapidly to 200° F. To do this, the steam spray was used continuously and the heating coils intermittently. Then the temperature was increased almost immediately to 230° F. Somewhat surprisingly, most of the wood tested tolerated high-temperature drying satisfactorily from the green condition. Red and white oak and sweetgum heartwood required air drying to 25 percent MC, or conventional kiln drying to 20 percent MC, before high temperature could be used without causing honeycombing and collapse.

Mackay (1974) designed a high-temperature drying procedure for mixed aspen and balsam poplar studs involving a mid-process conditioning period. The total time was 4 days and the studs were dry enough in the outer zones to pass the 19 percent maximum moisture content test using ordinary moisture meter techniques. Follow-up research, however, showed that wet spots still present continued to dry, producing delayed shrinkage and collapse (Mackay 1976).

To solve this problem of delayed shrinkage, several industries drying aspen in the Lake States have high-temperature-dried for 2 days and then gone to an equalization setting at lower temperatures (160° F dry-bulb, 140° F wet-bulb temperature) until the required moisture contents are obtained. This appears to be a possible procedure for hardwoods that dry readily at first but have persistent wet spots.

The success of the experimental high-temperature drying of hardwoods suggests that high-temperature drying has potential for commercial use in the United States with great benefits. Data under semi-commercial conditions are needed, both to determine maximum safe initial moisture content conditions to avoid degrade and to determine procedures acceptable for commercial operation. Also, some method of determining the moisture content during drying must be developed. Without such a method, it is likely that some overdrying or underdrying will result. There also is some need for research to answer questions on color, strength, and other aspects of quality for the various uses to which hardwoods can be put.

[11] Presentation by P. Deverick, Fairchild Chair Co., Lenoir, N. C., to Southeastern Dry Kiln Club, Clyde, N.C., Nov. 1972.

Drying Times and Species Potentialities

Table 25 lists the U.S. hardwoods for which high-temperature information is available, their potential for drying from the green or the air-dried condition, some very rough estimates of drying time to 8 percent moisture content with minimum equalizing and conditioning, and at least one reference for each wood.

Table 25 –*Eastern hardwood species for which high-temperature kiln-drying potential has been indicated, and estimated drying time for 1-inch lumber*

Lumber name	Estimated time for drying[1] to 8 percent moisture content from:		Publication in which information is given				
			Cech	Mackay		Wengert	
	Green condition	Air-dried[2] condition	1973	1974	1976	1972	1974
	Hour	*Hour*					
Ash, black	42	24					X
Aspen			X	X	X		X
Basswood	30	18					X
Beech		24				X	
Birch	72	30	X			X	
Cherry	72	30				X	
Elm, soft	72	30				X	
Hackberry	72	30					X
Hickory		36				X	
Maple, soft	66	24					X
Maple, sugar		30	X			X	
Oak, red		42	X			X	X
Oak, white		42				X	X
Pecan	72	30					X
Sweetgum, sap	66	24				X	X
Sweetgum, red		36				X	X
Tupelo, black	66	24				X	
Yellow-poplar	66	24					X

[1] Includes 6 hours for cooling, equalizing, and conditioning.
[2] 22 percent MC for oaks, 20 percent or lower MC for other woods.

Apparent Process Requirements

If high-temperature drying is to be applied commercially, the process requirements are somewhat different from those of softwoods. These requirements should be kept in mind when planning to install a high-temperature kiln for softwoods now and for hardwoods later on or when installing a hardwood kiln for conventional drying now which eventually may be converted to high-temperature drying.

A. Target dry-bulb temperature should be rapidly attained. The usual target is 230° F although higher temperatures have been tried.

B. The initial heating medium would depend on the material being dried:

(1) Green—steam spray and heated air.

(2) Partly air-dried—undetermined at present.

(3) Air-dried—heated air. Dry-bulb and wet-bulb temperatures should be brought up as close together as possible, with the wet-bulb temperatures raised to 200° F on green stock. To attain the high wet-bulb temperatures needed, vents, wall panels, and doors must seal very well.

C. Air temperature should be uniform when at high temperatures, with no area below boiling, especially on the leaving air side of the load.

D. Air velocity should be high through the load—a minimum of approximately 600 feet per minute with 4-foot-wide loads and of 900 feet per minute for wider loads. Research still in progress is using velocity up to 2,000 feet per minute.

E. Equalizing and conditioning, when necessary, must be done below 212° F. In the high-temperature drying of aspen studs in 96 hours (Mackay 1974), an 18-hour period of high humidity at 204° F dry-bulb temperature was used before the final 15 hours of drying at 250° F. The reader is referred to the chapter on Conventional Kiln Drying for general equalizing and conditioning procedures.

In view of these process requirements, special consideration must be given to the kiln.

The kiln must be able to operate at both normal and high temperatures. Due to the high heat and humidity, masonry structures may have a short average life expectancy. Masonry structures would have to be well insulated, and the interior wall and ceiling would have to be well sealed. Cracks will have to be repaired immediately. Presently available prefabricated kilns with insulated aluminum-paneled walls and roofs are expected to have long service lives. All corners, joints, floor sills, and door frames must be well designed and properly installed to prevent leakage and undue heat loss. Particular attention should be paid to having tight, well-insulated roofs. Some thought should be given to a lightweight aggregate to provide more thermally efficient concrete floors.

There must be sufficient heating capacity to rapidly attain target temperatures. Since the kiln will require steam for humidification, heat for major operations should be provided by fin-type steam coils. In experimental high-temperature drying of softwoods, extra heat for the heating up period has been provided by a direct firing equipment. Steam pressure should be 150 pounds per square inch.

Air travel length should be 8 feet or less, or 16 feet or less in a double-track kiln with booster coils midway between the loads. In package-loaded kilns, 10 to 12 feet would be the maximum air travel unless the kiln can be loaded from both sides, with booster coils along the middle. To obtain the high air velocities necessary, a direct-connected fan system (rather than a line shaft) is required. Two-speed fan motor operation is desirable when both normal and high-temperature drying will be done, to save electrical energy. Commonly available in-kiln fans are designed to operate safely up to 250° F. Special attention must be paid to baffling.

Equal attention should be paid to the humidification system. Many high-temperature softwood kilns are not equipped with any humidification system at all, so they are not suitable for hardwoods without adding this feature. A proper system should be able to deliver large quantities of saturated steam at low pressure. Steam at high pressure suitable for the heating system must go through a desuperheater before being used for humidification.

If a high-temperature kiln is to be designed for both hardwoods and softwoods, provisions can be made for opening the vents on just the high-pressure side of the kiln. This helps to maintain uniform drying conditions. Otherwise, the venting that is necessary when drying a very wet permeable wood will take place through leaks, tending to cause the kiln to deteriorate.

Literature Cited

Cech, M. Y.
1973. Status for high-temperature kiln drying in Eastern Canada. Can. For. Ind. 93(8):63–71.

Kimball, K. E. and D. P. Lowery
1967. High-temperature and conventional temperature methods for drying lodgepole pine and western larch studs. For. Prod. J. 17(4):32–40.

Kollmann, F.F.P.
1961. High-temperature drying—research, application, and experience in Germany. For. Prod. J. 11(11):508–515.

Lowery, D. P. and K. E. Kimball
1966. Evaluation of high-temperature and conventional methods of stud drying. Northwest Wood Prod. Clinic Proc., Spokane, Wash. p. 55–65.

Lowery, D. P., J. P. Krier, and R. A. Hann
1968. High-temperature drying of lumber—a review. U.S. For. Serv. Res. Pap. INT–48, Intermountain For. and Range Exp. Stn., Ogden, Utah.

Mackay, J.F.G.
1974. High-temperature kiln drying of northern aspen 2- by 4-inch light framing lumber. For. Prod. J. 24(10):32–35.

Mackay, J.F.G.
1976. Delayed shrinkage after surfacing of high-temperature kiln dried northern aspen dimension lumber. For. Prod. J. 26(2):33–36.

Richards, D. V.
1958. High-temperature drying of southern hardwoods. Alabama Agr. Exp. Stn. No. 123.

Tiemann, H. D.
1918. Superheated steam dry kiln. U.S. Pat. No. 1,268,180.

Wengert, E. M.
1972. Review of high-temperature kiln drying of hardwoods. South. Lbrmn. 2139(423):17–19.

Wengert, E. M.
1974. Maximum initial moisture contents for kiln drying 4/4 hardwoods at high temperatures. For. Prod. J. 24(8):54–56.

CHAPTER 7
SPECIAL PREDRYING TREATMENTS

Special treatments may be used before or early in drying to accelerate drying rate, to modify color, or to prevent checks and other defects. This chapter deals with steaming, chemical seasoning, polyethylene glycol (PEG) treatment, and surface and other treatments. Under steaming, the postdrying treatment of collapsed woods also is discussed. Presurfacing was discussed earlier under acceleration of conventional kiln drying.

Steaming

To Accelerate Drying

Early in the study of wood drying at the U.S. Forest Products Laboratory, observations were made that steaming hardwoods before drying sometimes resulted in reduction of drying time. Detrimental effects were noted, however, when air-dried stock containing surface checks was steamed. The checks deepened and widened and sometimes became bottleneck or honeycomb checks. The steaming used at that time was relatively long. The conclusion was drawn that such steaming represented a delay during which no drying occurred and general use of the practice was stopped.

More recent studies in a number of schools and laboratories have shown a number of benefits. The permeability of both softwoods and hardwoods is increased by short periods of steaming. Moisture migration rates are increased significantly, and drying times are reduced. The development of prefabricated aluminum kilns has made possible the use of steaming in commercial drying operations.

Simpson (1975) reviewed the most significant research results and investigated the acceleration of drying small specimens of wood. He tried several species of wood in the green condition and steamed at 212° F. Drying rates were increased for northern red oak, cherrybark oak, and sweetgum heartwood. The drying rate at 50 percent moisture content for these small specimens increased 34 to 75 percent for the oaks and 11 to 36 percent for sweetgum heartwood. Steaming times were in the range of ½ to 5 hours. For sweetgum heartwood, the 5-hour period was best. The drying rate of sweetgum sapwood was slightly reduced by steaming.

In another study with 1-inch-thick oak, Simpson (1976a) found that the moisture gradients, during drying after steaming 4 hours at 212° F, were smooth curves. The natural moisture gradients of the unsteamed controls had inflections that indicated free water movement was restricted. Simpson's work showed that free water migration from the center toward the surface was enhanced by steaming.

The above results were achieved with saturated steam at 212° F, a condition difficult to obtain in commercial kilns. A larger scale study used both green and partly air-dried rough 4/4 northern red oak (Simpson 1976b). The lumber was pretreated with nearly saturated steam at 185° F for 4 hours. Reductions in drying time for both classes of lumber were about 17 percent. No defects occurred in the green lumber nor in one batch of the partly air-dried material. The other partly air-dried batch, however, had been severely surface checked during air drying. The steaming appeared to deepen the surface checks and change them into bottleneck or honeycomb checks. The change to honeycomb checks confirms the admonition not to use steam spray during warmup of a kiln charge of fully air-dried oak. Surface checks may be present in such oak but not visible.

While the above studies are only exploratory, they give some prospect for practically accelerating the drying of eastern hardwoods by presteaming treatments. Additional studies are needed to confirm benefits and determine limitations, comparative energy demands, and economics.

To Modify Color

Walnut[12]

The most common use of presteaming treatments is to modify the color of the sapwood of black walnut. Steaming darkens the sapwood, toning down the contrast between it and the rich brown-colored heartwood and facilitating the uniform finishing of the wood. It also improves the color of the heartwood, making it and the sapwood more uniform. There is some extraction of coloring matter from the heartwood during the process. These extractives do not penetrate the sapwood beneath the surface.

The best steaming results are achieved by treating green lumber with wet steam in as tight a structure as possible at temperatures that give the most color in the least time.

[12] This section has been prepared by K. C. compton, U.S. Forest Service, State and Private Forestry, Madison, Wis.

Nonpressure steaming of walnut is done in special vats or buildings with provisions for wet steam from 180° to 215° F. Any structure is suitable so long as it is made of materials that will stand up under wet heat up to 215° F and the acid corrosion of the wood extractives. Steaming times are 24 to 96 hours. Walnut should not be steamed in the dry kiln because of the time required and the corrosive effects of steam and volatile extractives.

Three steaming vats or chambers are shown in figures 16 to 18. In figure 16, the floor is reinforced concrete and the doors are typical dry-kiln type. The lumber is stacked by forklift trucks on wooden bolsters. Low- to moderate-pressure steam is introduced by perforated steam pipes in the troughs, which are filled with water. An alternative is to circulate steam in closed pipes submerged in the water in the troughs. The steam traps, in this case, discharge their condensate into the troughs to keep them full. The capacity of a

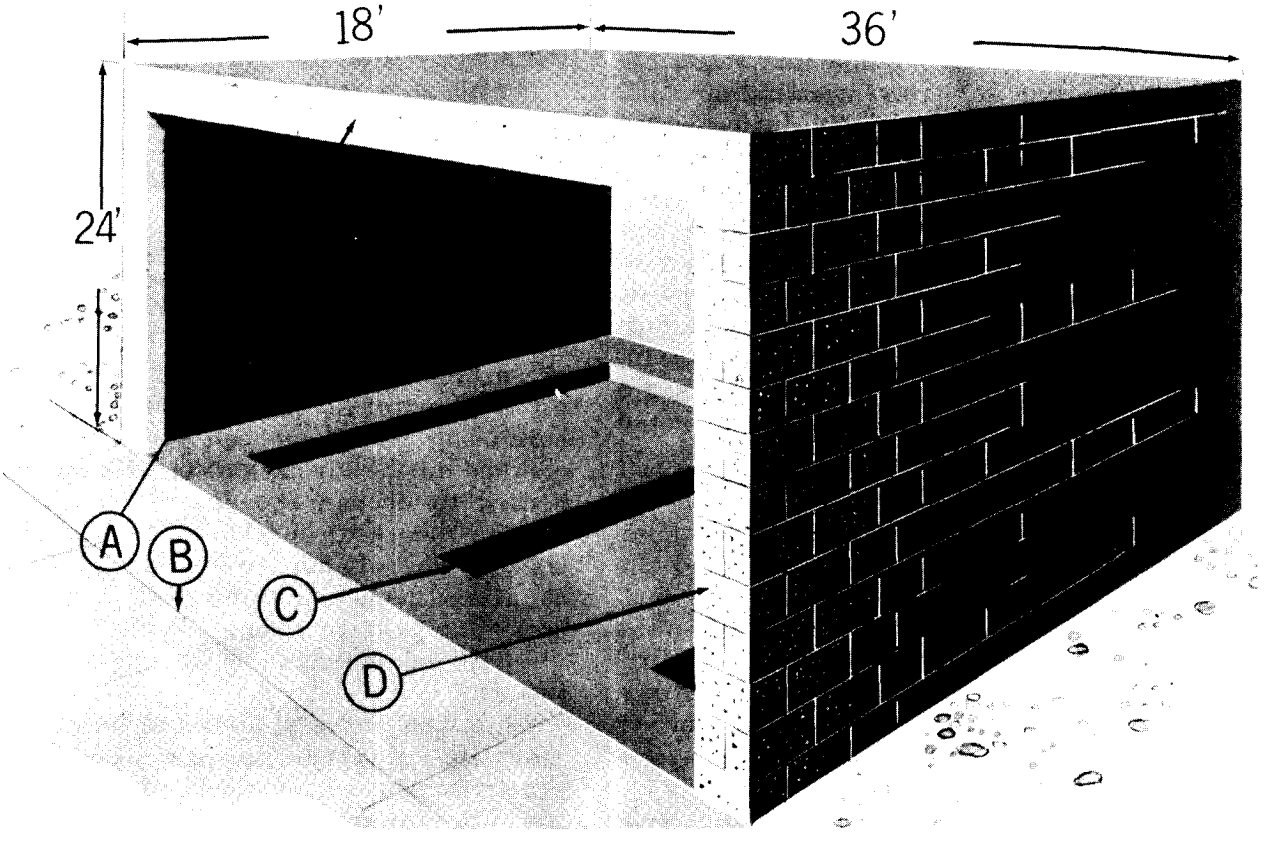

M 130 315

Figure 16.—Steaming chamber constructed of concrete block and poured, reinforced concrete: A, Roof is poured concrete or prestressed concrete sections; B, apron or loading ramp; C, trough for perforated or imperforated steam pipes in water; and D, walls of concrete blocks or poured concrete.

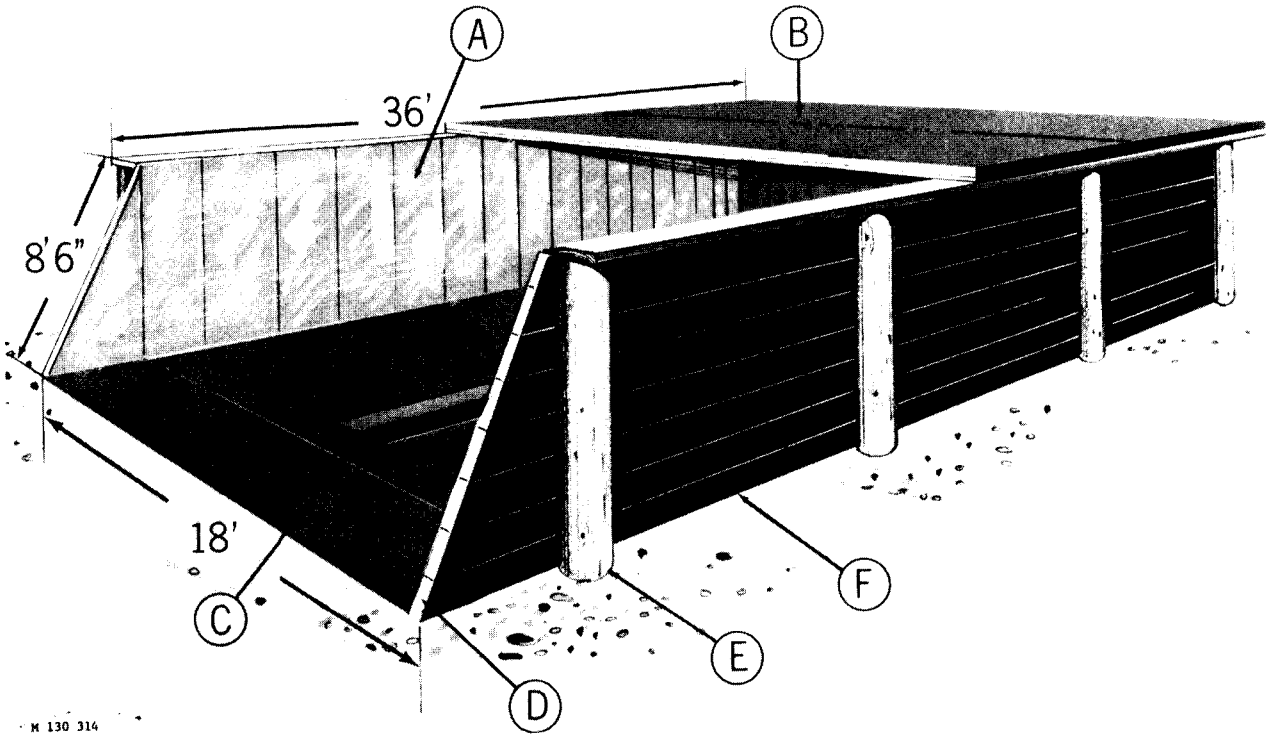

M 130314

Figure 17.—Steaming vat of wood and sheet aluminum construction (Details courtesy of Hartzell Industries, Inc., Piqua, Ohio): A, Sheet aluminum lining, with joints sealed with asphaltic materials; B, roof sections of creosoted frame and planks, lined with sheet aluminum; sections are placed by forklift truck as vat is filled; C, trough for perforated steam pipes in water; D, slanted jamb causes door sections to fit securely by weight alone; E, creosoted posts set in ground; and F, creosoted 2- by 8-inch plank wall.

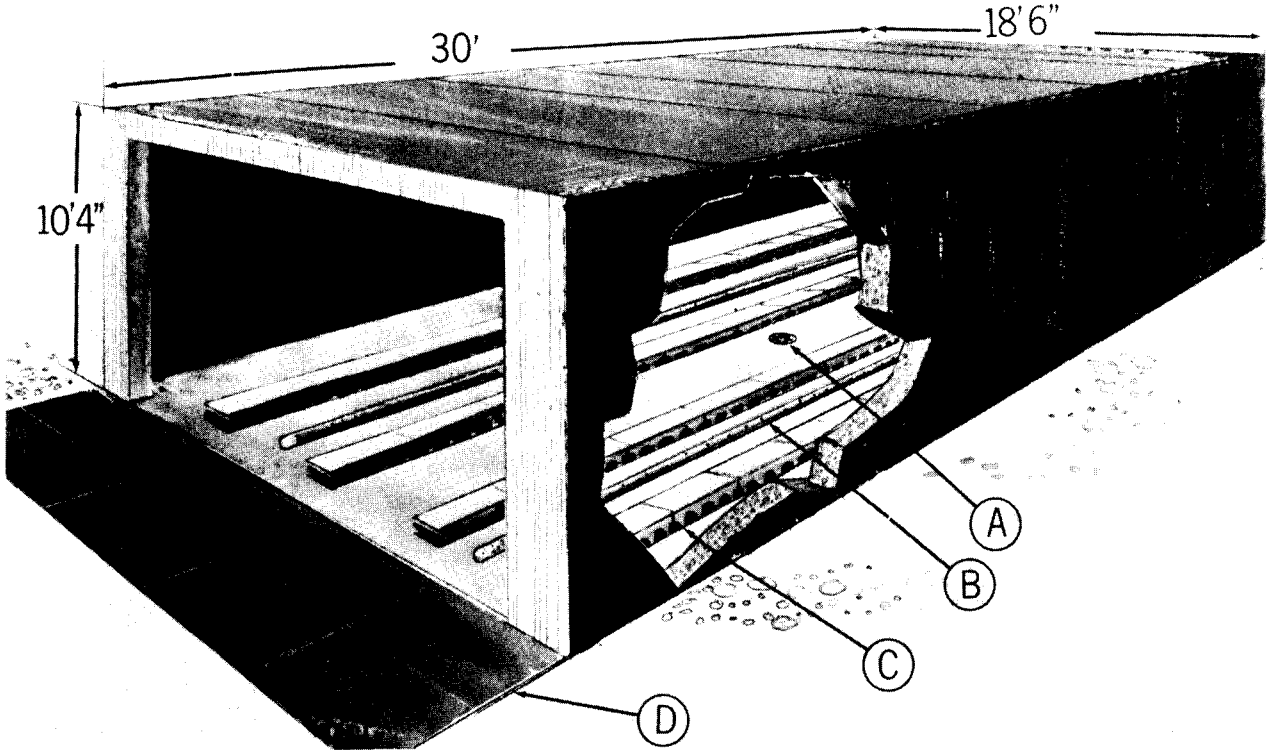

M 130316

Figure 18.—Steaming chamber of poured concrete walls and roof (Details courtesy of Iowa-Missouri Walnut Co., St. Joseph, Mo.): A, drain for condensate; B, steam pipe of 2-inch diameter with ¼-inch perforations; C, concrete blocks turned on sides and imbedded in concrete to hold lumber packages off of floor; and D, apron or loading ramp.

chamber of the dimensions shown is 40 to 50 thousand board feet (M bm) of lumber in solid-pile packages.

In figure 17, the lumber is stacked in the vat in the same manner as in figure 16. The sections of the vat roof are put in place by the forklift as the vat is filled. The front door sections are the same construction as the roof sections. Joints between sections are covered with sawdust to reduce steam losses. The capacity of this vat is 16 M bm solid-piled lumber packages.

The walls of the chamber in figure 18 are 10 inches thick. The permanent roof is made of hollow, precast concrete sections covered with insulation and built-up roofing. Dry-kiln type insulated doors with double surfaces of aluminum are used. Steam from a high-pressure boiler is injected directly into the chamber. The capacity of this unit also is 16,000 board feet.

In figure 17, all joints of the flashing-weight aluminum sheets were sealed with a high-melt asphalt. Other materials of construction are possible, including solid wood cribbing, aluminum frame and sheathing, and tile. All types of steam vats or chambers should be protected by a coating of asphalt or one of the materials supplied by dry kiln companies for kiln coating. Some walnut steam chambers have trowelled mortar-type coatings similar to those used in patching boiler masonry. In any event, iron and steel fittings should not be exposed directly to the steam. Provision should be made for gasketing or sealing doors at tops, sides, and bottoms.

Wet steam is preferred for coloring black walnut. Green walnut wood darkens more rapidly and to a greater degree than dry walnut, and the more saturated the atmosphere, the less chance for the wood to dry during steaming. In some installations, however, high-pressure steam, which is dry and has a strong superheat, is injected directly into the chamber. Apparently drying does not take place fast enough to offset the rapid coloring effect from the higher temperature. Drying defects customarily do not develop. Under this procedure, temperatures in the range of 215° to 225° F are attained.

Walnut steaming chambers preferably are equipped with recording thermometers, and some have temperature controllers also. There are no fans in steaming chambers.

Steaming has also been done commercially under pressure. Brauner and Conway (1964) developed the optimum conditions experimentally. Then they settled on steaming at 6 pounds per square inch pressure and 230° F for 5 hours. A longer time is needed in the winter. This procedure not only darkens the sapwood; the heartwood loses its purplish cast and become chocolate brown. Although the coloration is rapid and time saving, the lumber must be cooled in the pressure vessel or end checking and honeycombing occur. An alternative is to take the load out of the retort and cover the wood with a tarp until cool. Millions of board feet of walnut have been steamed at the Conway plant using a 7- by 8- by 20-foot pressure vessel. At another location a suitable pressure steamer was made by adapting a preservative treating cylinder door to the end of an old tank car. Generally, 25 to 35 boiler horsepower are needed for a walnut steaming installation.

Steaming walnut may increase its drying rate, but there is no conclusive proof of this at this time.

Other Woods

European beech lumber and dimension items are frequently steamed to give them a reddish-brown tone that enhances their color when finished appropriately. Beech steaming is not generally done in the United States, but presumably it could be, if desired. Steam has been used, however, to give oak a gothic brown color. Ordinary kiln-drying conditions can be manipulated to give sugar maple a reddish brown color (McMillen 1976) but presumably the same could be done by a short steaming period followed by customary drying. Sweetgum sapwood was steamed before air drying, at one time, to sterilize the wood, promote rapid air drying, and avoid blue staining. No record was made of color effects from such steaming.

To Recover Collapsed Wood

Normal eastern hardwoods ordinarily do not collapse badly during kiln drying. Some of the western hardwoods do. There is some evidence, however, that excessive shrinkage in some oaks involves collapse. Collapse is technically excessive shrinkage and distortion of individual wood cells in various zones of the

wood. In a collapse-prone wood, the external effect of collapse is a "washboard-type" surface.

In Australia, where collapse-prone species are common, recovery is accomplished by taking the collapsed boards out of a kiln charge at about 18 percent moisture content, steaming them for 12 to 24 hours in a chamber like that used for walnut, and then finishing the drying in a kiln with noncollapsed wood. Steaming is done with saturated steam at 212° F.

Chemical Seasoning

Chemical seasoning consists of treating green wood with a hydroscopic chemical and air drying or kiln drying the treated material. The chemical reduces surface checking during seasoning, rather than speeding the drying.

The objective is to impregnate the outer zone of lumber with chemicals to a depth of about one-tenth of the thickness, with the highest concentration at or near the surface. The chemicals maintain the outer zone at a high moisture content during early stages of drying. This reduces the shrinkage of the outer zone and lessens the tendency to surface check. Some chemicals additionally impart a certain degree of bulking. Kiln schedules must be modified somewhat to bring the initial relative humidity below the relative humidity in equilibrium with the saturated chemical solution.

Numerous chemicals have been used (McMillen 1960). Common salt is cheap and effective in reducing surface checking. Urea, which was effective with Douglas-fir, was not as effective as salt on oak. Other chemicals included invert sugar, molasses, diethylene glycol, and a urea-formaldehyde mixture. A proprietary salt mixture having corrosion inhibitors in it was popular for a time.

The proprietary chemical, as well as common salt, can corrode metals and damage dry-kiln equipment, woodworking machinery, and hardware fastened to the treated wood if the amount of treating chemical is excessive or the treatment time too long. Salt-treated wood, regardless of care in treatment, will corrode metals in contact with it in regions of prolonged high humidity such as the Gulf of Mexico and South Atlantic coasts. Salt also can reduce the strength of wood and cause problems in gluing and finishing. Although salt has been and continues to be used successfully in the seasoning of thick southern hardwoods, considerable care in treatment, drying, and use is recommended.

Polyethylene Glycol Process

Green wood heavily treated with PEG (polyethylene glycol-1000) retains its green dimension during drying and indefinitely; thus the wood is permanently restrained from shrinking, swelling, or warping regardless of atmospheric humidity. For maximum dimensional stability, PEG must be diffused deeply into the wood in amounts of 25 to 30 percent of the dry weight of the wood. Two solutions commonly used are 30 and 50 percent PEG by weight. Heating the solution during treatments speeds up the diffusion, but soaking times range from 3 to 30 days. Kiln drying after treatment can in many cases be much more drastic than normal. The process is especially helpful for hardwood tree and limb cross sections, thick novelty items, and carvings and material with highly irregular grain. Details of the process, which is relatively expensive, have been described by Mitchell (1972).

Surface Treatments to Prevent Checking

In addition to presurfacing, there are certain materials that can be applied to the wood's surface to retard checking. Chemicals used successfully are wax, sodium alginate, and a salt paste. These materials either retard moisture movement or alter the vapor pressure at the surface. No details are available on use of waxes, but a thick emulsion of microcrystalline wax has been applied to the sides of highly figured gunstocks in California to prevent checking.

Sodium Alginate

In Australia, Harrison (1968) investigated the use of very viscous sodium alginate solutions or emulsions as dip treatments on a variety of hardwoods up to 2 inches thick. When the lumber is air dried, the alginate dries out to form a porous skin over the surface. It is effective in preventing checking in all of the woods tried under severe air drying conditions. The method has not been tried in the United States but might have some benefit for thick oak.

Sodium alginate is a dry powder obtained from seaweed and is used in a variety of products in the United States. Considerable care must be used in mixing it to form the 1½ percent solution found most effective in Australia. The wood must be still quite green for the treatment to be effective in preventing checking. The air-drying piles must be carefully roofed to keep the alginate from being washed off by rain. For 2-inch stock, a drying shed is necessary to protect the treating chemical and provide mild conditions for air drying.

Salt Paste

The U.S. Bicentennial celebration inspired widespread interest in seasoning disks or thick sections of large trees. The disks were desired for exhibits or usable items on which the chronology of important events could be shown. It is very difficult to season such disks successfully with even the least-difficult-to-dry species. The most damaging defect is the large V-shaped check that is likely to develop because tangential shrinkage is usually much greater than radial shrinkage. In addition, many small end checks tend to appear over the entire surface. Polyethylene glycol has promise, but is slow, costly, and the temptation always exists to terminate treatment before all wood cell walls are fully saturated with PEG.

A simple and inexpensive method developed by W. T. Simpson and J. L. Tschernitz of the U.S. Forest Products Laboratory is successful enough to merit its inclusion in this handbook. It is a thick paste modification of the old "salt seasoning" method, combining some bulking of the surface zone with retention of moisture at the disk surface by hydroscopic action. The bark should be left on the disk. Before applying the paste, the surfaces of the green disk are alternatively brushed with a concentrated table salt solution—3 pounds salt per gallon of water, with excess salt crystals visible in the solution after thorough mixing. Several hours are allowed for the salt to penetrate by diffusion and gravity.

Then the wood is treated with the paste. To make the paste, the concentrated solution above is mixed with enough cornstarch to get the right consistency to build up a thick layer on the disk surface. The addition of several egg whites acts as a convenient binder to reduce the flaking of the paste after it dries. The treated disks can be air dried in a room with plenty of ventilation or kiln dried using a moderate schedule.

Other Pretreatments

Precompression

Cech (1971) has established that dynamic transverse compression of 2-inch yellow birch lumber, before drying by a severe schedule, significantly improved drying behavior. The drying was carried out at 215° F. Momentary thickness compression of 7 to 8.5 percent in a roller device resulted in greatly reduced collapse and honeycombing compared with uncompressed material. Drying time was only 81/3 days compared with a customary 18 days for noncompressed material dried by conventional schedules.

Chech and Pfaff (1975) also used a 7.5 percent precom pression with both conventional and mild accelerated kiln schedules on 4/4 red oak. Precompression resulted in about a 5 percent saving in drying time.

Precom pression has not been accepted commerically, at least not on any large scale, but experimental results to date appear to merit more study.

Prefreezing

The freezing of green wood, followed by thawing before the start of drying, is another treatement that increases the drying rate and decreases shrinkage and seasoning defects in some species. Most research on hardwoods has been done with black walnut (Cooper, Erickson, and Haygreen 1970). The effect on shrinkage appears to be a good indicator of seasoning improvement, and favorable results have been attained with black cherry, American elm, and white oak (Cooper and Barham 1972). Another eastern hardwood species for which decreased shrinkage has been found is black tupelo (blackgum). The best prefreezing temperature for black walnut is –100° F, but significant improvement is found at –10° F, a temperature readily attained in commercial freezing equipment. A freezing time of 24 hours is adequate for thicknesses up to 3 inches. A similar length of time has been used for thawing.

Although prefreezing would require substantial additional investment, a shortening of drying time to half of the time required by some of the industry has been demonstrated for walnut gunstock blanks (Cooper, Bois, and Erickson 1976). Using a slightly accelerated kiln schedule, 600 prefrozen gunstock blanks dried from green in 103 days had only 2.66 percent defective from collapse, checking, and warp while 6.50 percent of the 400 unfrozen blanks in the pilot test had similar defects.

Thus precompression and prefreezing are two treatments that have some promise of improving the drying rate of hardwoods without decreasing quality.

Literature Cited

Brauner, A. and E. M. Conway
1964. Steaming walnut for color. For. Prod. J. 14(11):525–7.

Cech, M. Y.
1971. Dynamic transverse compression treatment to improve drying behavior of yellow birch. For. Prod. J. 21(2):41–50.

Cech, M. Y. and F. Pfaff
1975. Kiln drying of 1-inch red oak. For. Prod. J. 25(8):30–37.

Cooper, G. A. and S. H. Barham
1972. Prefreezing effects on three hardwoods. For. Prod. J. 22(2):24–25.

Cooper, G. A., R. W. Erickson, and J. G. Haygreen
1970. Drying behavior of prefrozen black walnut. For. Prod. J. 20(1):30–35.

Cooper, G. A., P. J. Bois, and R. W. Erickson
1976. Progress report on kiln-drying prefrozen walnut gunstocks—techniques and results. FPRS Separate No. MW-75-S70, For. Prod. Res. Soc., Madison, Wis.

Harrison, J.
1968. Reducing checking in timber by use of alginates. Austral. Timber J. 34(7):24–5.

McMillen, J. M.
1960. Special methods of seasoning wood: Chemical seasoning. U.S. For. Prod. Lab. Rep. 1665–6.

McMillen, J. M.
1976. Control of reddish-brown coloration in drying maple sapwood. USDA For. Serv. Res. Note FPL-0231. For. Prod. Lab., Madison, Wis.

Mitchell, H. L.
1972. How PEG helps the hobbyist who works with wood, 20 p., illus. Pamphlet, USDA For. Serv., For. Prod. Lab., Madison, Wis.

Simpson, W. T.
1975. Effect of steaming on the drying rate of several species of wood. Wood Sci. 7(3):247–255.

Simpson, W. T.
1976a. Effect of presteaming on moisture gradient of northern red oak during drying. Wood Sci. 8(4):272–276.

Simpson, W. T.
1976b. Steaming northern red oak to reduce kiln drying time. For. Prod. J. 26(10):35–36.

CHAPTER 8
OTHER METHODS OF DRYING

Heated-Room Drying

In heated-room drying, a small amount of heat is used to lower the relative humidity. This also lowers the equilibrium moisture content (E MC) to which the wood will come if left in the room a long time. This method is suitable only for wood that has been air dried first. Green lumber may check and split by this method. This method does not dry lumber rapidly, but it is suitable for small amounts of lumber.

Before air drying is started, the lumber should be cut as close as possible to the size it will have in the product. Allowance must be made for some shrinkage and warping during drying and for a small amount to be removed during planing and machining. If it is necessary to shorten some long pieces of air-dried lumber before heated-room drying is started, the freshly cut ends should be end coated to prevent end checks, splits, and honeycomb.

For reasonably fast heated-room drying, the wood should be exposed to an EMC about 2 percent below the moisture content of use. The wood is left in the room just long enough to come to the desired average moisture content. Then the wood is taken out and stored in a solid pile until it is used. The storage area should have the same EMC as the area in which the wood will be used.

The amount that the temperature must be raised above the average outdoor temperature depends upon the average outdoor relative humidity. Typical values are given in table 26. Do not attempt to use more heating with this method.

Any ordinary room or shed can be used and any ordinary means of heating the room should be satisfactory. A slight amount of air circulation is desirable to achieve temperature uniformity. If the material is relatively small-sized, it can be piled in small, stickered piles on a strong floor. It also could be sticker piled on carts that can be pushed in and out of the room. Long lumber should be box piled on strong, raised supports as shown in figure 19.

The lumber should be marked or records kept as to when it entered the room and when to expect to remove it. Any amount of air-dry lumber can be put in or dried lumber removed without upsetting conditions. The doors should be kept closed as much as possible so that the average temperature can be kept close to the desired elevation above average outdoor temperature. Variations of the average outdoor temperature from night to day and small variations from day to day do not affect the process.

Table *26. —Amount temperature must be raised above average outdoor temperature for various equilibrium moisture content values in heated-room drying*

EMC value desired	Degrees above average outdoor temperature at—		
	70 pct RH	75 pct RH	80 pct RH
Percent	°*F*	°*F*	°*F*
4	38	40	42
5	31	33	35
6	23	25	27
7	18	20	23
8	13	15	17
9	10	12	14
10	6	8	10

Dehumidifier Drying

Considerable interest has been expressed in dehumidifier-type kilns developed in England, Norway, Germany, and Italy. These dryers have been used successfully for hardwoods in Europe where kiln schedules are generally conservative. In these locations, the desired final moisture content usually is not below 9 percent. Technical information from the British Forest Products Research Laboratory (Pratt 1968) indicated such dryers were not operated at temperatures over 130° F. Drying of hardwoods to 7 percent moisture content requires use of higher temperatures to be practical.

The dehumidifier dryer uses electrical refrigerator-type equipment in an arrangement favorable to the drying of wood and other materials. In a closed building or room,

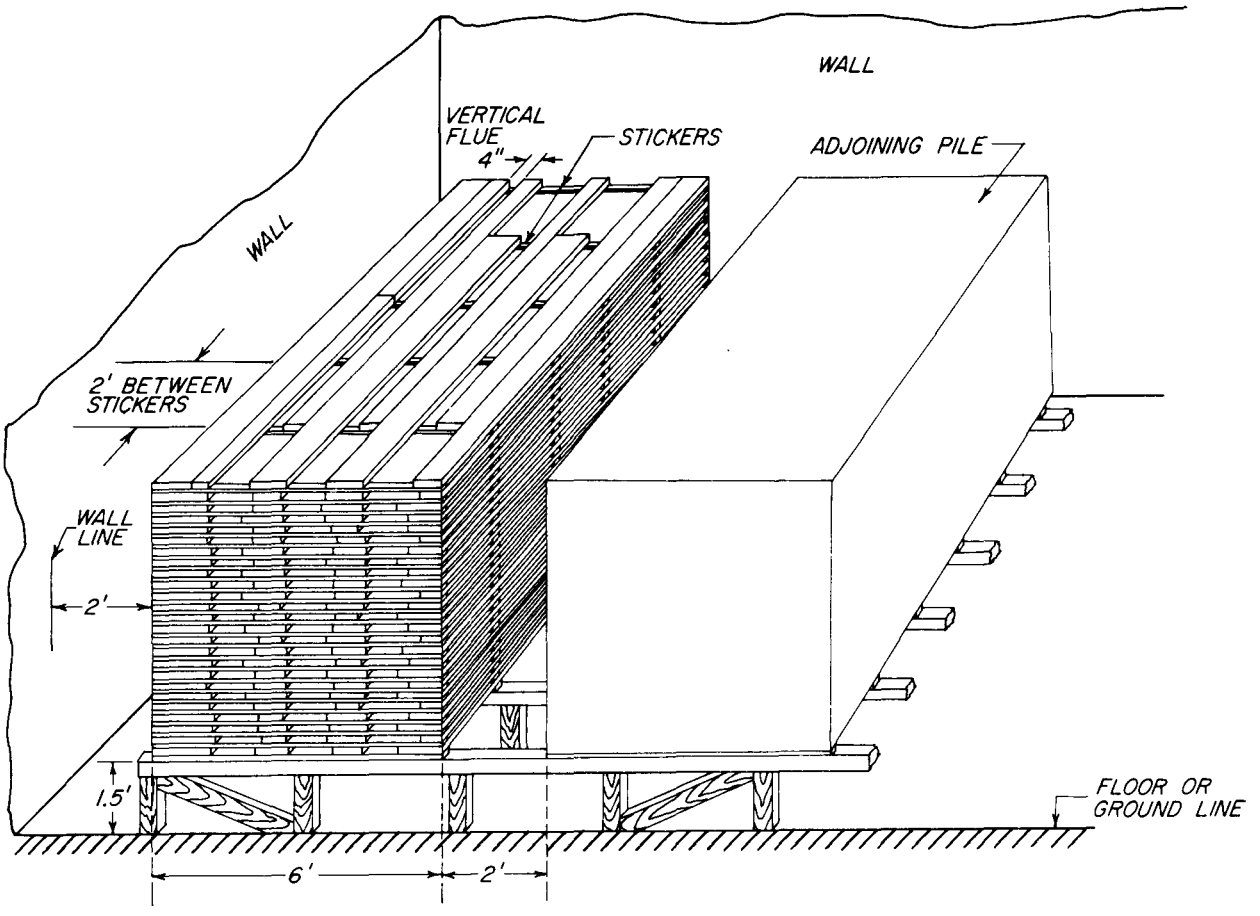

M 144690

Figure 19.—Lumber piled for drying in a heated room.

moist air from the lumber is drawn over refrigerated coils. The air is cooled below its dew point and part of the moisture is condensed. The water flows to a tray in the base of the unit and is drained out of the kiln. The air circulates past the condenser unit of the system and picks up the latent heat of vaporization. Then the air is blown by the fans through the lumber. In some installations, however, the dehumidifier is located outside the drying chamber and the latent heat benefit is not realized.

The relative humidity generally is lower than can be obtained at the same temperature in a conventional kiln vented to the air. Electrical resistance heaters, hot water coils, or steam coils can be used to augment the heat from the condenser. Brief coil-heating periods can be used to defrost the coils, when necessary, and "interruptions" of drying can be inserted in the schedule to minimize drying stresses.

Advantages claimed by manufacturers, and borne out to some extent by published data, are:

- Capital investment is relatively low.
- Operating costs are not exorbitant.
- Drying time to 12 percent moisture content is not unduly prolonged for woods normally dried at low temperatures.
- The equipment lends itself readily to automatic (time-based) programming so the dryers can be operated by relatively unskilled personnel with little danger of overd rying.
- Mixed species and thicknesses can be dried, within certain limitations, in the same dryer.
- Quality of dried material, when proper schedules are used, is better than that of material air dried under somewhat adverse conditions.
- The amounts of shrinkage and warping are low.

At the low temperatures generally used, personnel can move in and out of the. dryer to insert more material or remove dried wood as needed.

Many of these advantages are also found in heated-room drying, but heated-room drying is best restricted to air-dried material. Dehumidifier dryers can be scheduled to safely dry refractory woods from the green condition. In their 1976 stage of development they apparently had no provision for conditioning to relieve drying stresses. The relative economics of careful air drying and heated-room economics of careful air drying and heated-room drying compared with dehumidifier drying have not been investigated.

Solar Drying

The changed world fuel situation has renewed interest in use of solar energy to dry lumber. Research in small experimental and semi-commercial solar dryers showed that hardwoods can be satisfactorily dried from the green to the air-dried condition. Drying times are about 50 to 75 percent of the air-drying times. Hardwoods can be dried further to 10 percent moisture content, but the time required is long compared with kiln drying.

Peck (1962), using a wood-framed rectangular dryer with double-layer transparent plastic film walls and roof in Madison, Wis., dried 4/4 northern red oak from 75 to 20 percent moisture content in 23 to 105 days starting in different months of the year. Drying times from 20 to 10 percent MC were 25 days for a period starting in July and 42 days starting in September. A 24-inch fan driven by a 5/8-horsepower electric motor circulated the air during daylight hours. The dryer roof, which essentially was the major solar energy-collecting surface, had 95 square feet of surface; the south wall had 17 square feet. The dryer held 425 board feet of lumber. Average temperatures within the dryer during drying operations were 13° to 19° F above outdoor temperatures.

Additional research on solar drying of wood has gone on around the world using equipment varying from very small cabinets in India to semi-commercial units holding about 3,000 board feet in Uganda. Plumbtre (1973) discussed his own research with the Ugandan kilns and reviewed world literature on the subject in a United Nations report.

Starting with a design supplied by the Forest Products Laboratory, the Institute of Tropical Forestry, Rio Piedras, Puerto Rico, constructed a solar dryer initially holding 2,000 board feet of 1-inch lumber and later expanded it to 3,000 board feet (Chudnoff, Maldonado, and Goytia 1966). The wood-framed building, 10 feet wide and 20 feet long, was oriented east and west. The sloping roof angled 16° from the horizontal, the south wail was 9¾ feet high, and the north wall 13-1/3 feet. Originally the roof, ends, and south side were covered with two layers of plastic film separated by a 15/8 inch air space. The north side, which contained the loading door, was plywood. Due to early film deterioration, the roof panels were replaced with single-layer window glass.

Sixteen-inch fans circulated the air over a black-painted heat absorber under the roof and through the lumber. Vents, with louver dampers, provided ventilation. The dampers were kept closed during the early part of the drying to prevent drying defects. Later in the cycle the vents were opened. At the end of drying they were closed again, and a water-spray was used to relieve drying stresses.

In this tropical location, 4/4 mahogany lumber was dried from 50 to 20 percent moisture content in 9 days, 5/4 in 13 days, and 8/4 in 23 days. Drying from 20 to 12 percent took 9, 12, and 28 more days, respectively. Mixed 5/4 hardwoods dried from 60 to 20 percent moisture content in 27 days and from 20 to 12 percent in 15 more days. Time of year made no practical difference in drying time for either the mahogany or the mixed hardwoods.

Johnson (1961) built a small homemade solar kiln in southwestern Wisconsin to dry small quantities of hardwood lumber for his own use. Solar heat was collected by single-thickness windows on the south facing wall of an A-frame structure. A ventilating slot was built in the wall below the windows. A wind-powered centrifugal blower drew air up over a heat-absorbing metal sheet behind the glass windows and then forced the air down through the lumber edge-piled on a rack. One-inch cherry and white oak were dried to 10 percent moisture content in 2 to 6 weeks.

Johnson has continued to dry lumber in a dryer of slightly modified design (Bois 1977).

The lumber is piled flat. An electric motor is used to drive the fan, but only when the temperature is above 85° F. The air is forced down into a central flue, then horizontally through the lumber pile. He estimates that it takes 400 hours of sunshine (70 "good" days) to dry hardwood 4/4 lumber from green to 10 percent moisture content.

While this method of drying is feasible for small quantities of lumber for hobby use, drying times are affected greatly by season of the year and the location. The relative suitability for solar energy collection the year round is only fair in Northeastern United States from Maine to central Wisconsin, including New England, New York, and Pennsylvania, and only good in most of the rest of the Eastern United States (Crowther 1976). In general, it appears that heated-room drying is a more practical way of drying small quantities of hardwoods as long as fuel costs are no more than double what they are now.

The experimental and semi-commercial solar dryers first described are essentially flat-plate radiation collectors and their major collecting surface is the roof. They are relatively inefficient (Wengert 1971). Thus the amount of lumber that can be satisfactorily dried in a dryer of this type is limited. Such dryers do not appear practical for moderate to large commercial hardwood operations in the Eastern United States.

Solar kilns do, however, have current potential in developing tropical countries where fuel costs are extremely high. Solar kiln design research is continuing with emphasis on separate solar collectors and heat storage units. Read, Choda, and Cooper (1974) describe a kiln built in Australia. The U.S. Forest Products Laboratory is developing a design for the Philippines. Rising fuel costs and improvements in solar energy technology may ultimately bring solar kilns into general use for commercial hardwood drying in the United States, but this appears to be something for the future.

Press Drying

Press drying (Hittmeier, Comstock, and Harm 1968) is defined as the application of heat to opposite faces of a board by heated platens to evaporate moisture from the board. Temperatures range from 250° to 450° F. Thermal contact between the heated platens and the board face is maintained by platen pressure of 25 to 75 pounds per square inch.

During drying, heat is transferred from the platens to the wood, causing air and vapor in the wood to expand and water to vaporize. A mixture of vapor and liquid then moves to the surface of the board where it escapes. Ventilated cauls located above and below the board sometimes have been used to help the vapor escape. The platens also hold the board flat and reduce width shrinkage; however, platen pressure and high temperatures generally lead to greater than normal shrinkage in thickness. The heartwood of some species of wood tends to darken and develop checks and honeycombing during press drying. These defects, however, may not adversely affect the board for many applications, and the darker color is often more appealing than the original color.

The process is particularly suitable for ½-inch and thinner boards of species highly permeable to moisture. It is being used for beech for flooring in Europe and is being considered for a variety of purposes in the United States.

High-Frequency and Microwave Heating

High-frequency heating involves both technical and cost problems. In operation, wood is placed in a powerful electric field oscillating at more than 1 million cycles per second and heated quickly to a temperature above the boiling point of water. If there were no resistance to the movement of free water or vapor through a wood, it could be dried rapidly. In general, however, wood is not very permeable. Some species have fairly permeable sapwood, but others have a tight structure. Moisture movement may be so impeded that high internal pressures and temperatures well above the boiling point of water are built up. Local explosions or ruptures may occur. In permeable woods, temperature levels off slightly above the boiling point as long as free water is present. When only

bound water remains, the temperature rises. Prolonged high temperatures weaken wood and lower its resistance to internal pressures.

Apart from technical difficulties, high-frequency heating is generally too expensive. The main costs are for high-frequency generators, power tube replacement, and electricity. A minimum estimate of the electricity costs in drying 10,000 board feet of green beech, birch, or maple sapwood from 70 percent to 8 percent moisture content in 24 hours follows:

To heat the lumber to drying temperature and remove the calculated 764 pounds of water per hour requires 263 kilowatts. Because a high-frequency generator is only about 50 percent efficient and a certain amount of heat would be lost, the power line would have to deliver at least 600 kilowatts to the generator. At 3 cents per kilowatt hour, the cost would be $43.20 per 1,000 board feet of lumber.

In view of the above, high-frequency dielectric heating is not practical for the general drying of heartwood. It has been used for drying persimmon sapwood golf club heads. A company in New England tried the method for drying turning squares of birch and maple, then abandoned it.

Although not for eastern hardwoods, microwave heating has been tried for the seasoning of tanoak baseball bats in Oregon. The principles and constraints are similar to those of high-frequency drying. Although the tanoak was believed to be principally sapwood, degrade was high (20 to 30 pct) and there was considerable collapse; thus the method was abandoned.

Solvent Seasoning

The solvent seasoning process involves subjetting the wood to a spray or continuous immersion of hot acetone, or a similar solvent miscible with water, for a number of hours until most of the water is extracted from the wood. Then the solvent is removed bv steaming or vacuuming. Additional water is removed at the same time.

While this method has not been applied to eastern hardwoods, extensive research has been done in California on drying tanoak sapwood by this method. One-inch lumber has been dried in 30 hours. A few boards suffered streaks of collapse, probably because of the presence of heartwood.

Minor Special Methods

Wood can be rapidly dried in an oily liquid maintained at a temperature high enough to boil off the water. A complicated variation of the method is called azeotropic drying. Recent research (Eckelman and Galezewski 1970, and Huffman, Pfaff, and Shah 1972) has demonstrated that the process does not have good prospects for drying hardwoods unless a considerably reduced pressure (partial vacuum) is used. Although the simple boiling-in-oil process is not suitable for hardwoods because of checking, a review of the details (McMillen 1961) would be valuable to anyone considering such use.

Vapor drying exposes the wood to the vapors of a boiling organic chemical such as in a pressure-treating cylinder and removed the mixed chemical and water vapors (McMillen 1961). This method has had considerable use in drying oak, hickory, and other hardwood railroad crossties before preservative treatment. It would also be suitable for crossing plank and car decking, but is not suitable for hardwoods to be used at low moisture content values for fine purposes.

Infrared radiation has been proposed in the past for drying wood, but the depth of ray penetration is slight and the method is not suitable for drying hardwood lumber. Vacuum drying and freeze-vacuum drying are of no practical value for hardwoods because any heat available is quickly used up in evaporation. Patents have been granted on combining heated-platen or high-frequency heating with vacuum drying, but have not been commercially applied in the United States.

Literature Cited

Bois, P. J.
1977. Constructing and operating a small solar-heated lumber dryer. USDA For. Serv. State and Private For., For. Prod. Util. Tech. Rep. No. 7, Madison, Wis.

CEAF
1976. The drying of solid timber. Seminar for U.N.I.D.O., Milan, Italy, May 18 (Trade brochure, CEAF, Turin, Italy).

Chudnoff, M., E. D. Maldonado, and E. Goytia
1966. Solar drying of tropical woods. USDA For. Serv. Res. Pap. ITF 2. Inst. Trop. For., Rio Piedras, P.R.

Crowther, R. I., et. al.
1976. Sun, earth: How to use solar and climatic energies today. A. B. Hershfeld Press, Denver, Colo.

Eckelman, C. A. and J. A. Galezewski
1970. Azeotropic drying of hardwoods under vacuum. For. Prod. J. 20(6):33.

Hittmeier, M. E., G. L. Comstock, and R. A. Hann
1968. Press drying nine species of wood. For. Prod. J. 18(9):91–96.

Huffman, D. R., F. Pfaff, and S. M. Shah
1972. Azeotropic drying of yellow birch and hard maple lumber. For. Prod. J. 22(8):53–56.

Johnson, C. L.
1961. Wind-powered solar-heated lumber dryer. South. Lmbrmn. 203(2532):41–2, 44.

McMillen, J. M.
1961. Special methods of seasoning wood. Boiling in oily liquids. U.S. For. Prod. Lab. Rep. No. 1665 (rev.), For. Prod. Lab., Madison, Wis.

McMillen, J. M.
1961. Special methods of seasoning wood. Vapor drying. U.S. For. Prod. Lab. Rep. 1665–3 (rev.), For. Prod. Lab., Madison, Wis.

Peck, E. C.
1962. Drying 4/4 red oak by solar heat. For. Prod. J. 12(3):103–7.

Plumptre, R. A.
1973. Solar kilns: their suitability for developing countries. U.N.I.D.O. Rep. ID/WG 151/4 U.N. Indus. Dev. Org., Vienna, Austria

Pratt, G. H.
1968. An appraisal of the drying of timber with the aid of dehumidifiers. Rep. Seminar on Dehumidifiers for Timber Drying, For. Prod. Res. Lab., Princes Risborough, Aylesbury, Bucks., England.

Read, W. R., A. Choda, and P. I. Cooper
1974. A solar timber kiln. Solar Energy 15(4):309–316.

Souter, G. R.
1971. Timber drying by dehumidification. Timber Trade J. Annual Spec. Issue, Sawmilling and Woodwork. Sect. S/23–28.

Ullevalseter, R. O.
1971. Lumber drying by condensation with the use of refrigerated dew point. Inst. Wood Technol., Vollebekk (Norway). p. 64.

Wengert, E. M.
1971. Improvements in solar dry kiln design. USDA For. Serv. Res. Note FPL–0212. For. Prod. Lab., Madison, Wis.

CHAPTER 9
STORAGE OF DRIED LUMBER

Lumber dried to a moisture content of 10 percent or less, and items manufactured from it, will regain moisture if stored for extended periods under conditions of high relative humidity. Excessive regain of moisture frequently results in (1) swelling of whole pieces or of certain parts, such as the ends of the pieces; (2) warping of items, glued-up panels for example; and (3) wood or glueline failures in solid-piled items where the moisture regain is confined to the ends. Hence, improper storage can negate many achievements of proper drying.

Air-Dried Lumber

When lumber is as dry as can be expected on the air-drying yard and at least below 20 percent moisture content, it should be stored where it is no longer exposed to wind, sun, and rain. T'he deteriorating effect of weathering continues as long as lumber is left outdoors. When stickered lumber is taken down and solid stacked, it takes up less space and a shed can provide the needed protection. When yard space is needed for air drying more lumber, and no adequate shed is available, less favorable drying yard areas may be set aside for bulk storage of fully air-dried lumber. Such yard-stored lumber must be fully protected, however.

If good, rain-tight pile roofs with adequate projections were used during air drying or if the lumber was air dried in a shed and the air drying space is not needed, the lumber does not need to be solid piled. The lumber will not go above 20 percent moisture content again unless it is rewet by rain. Dry, stickered lumber should be inspected regularly, however, to avoid insect attack in areas of infestation.

Dry lumber that is solid piled outdoors should be wrapped with tarpaulins or enclosed in prefabricated waterproof-paper shrouds. Rain wetting of any dried material is detrimental and tends to increase the degree of checking. Surface layers can take on a compression set that will cause any checks to stay open when the wood is finally kiln dried. If the amount of rain wetting is great enough, the moisture content can go above 20 percent and the wood again would be subject to stain and decay. Rain that penetrates into a solid pile does not evaporate easily.

Foundations in the storage area should provide good support and ground clearance just as in the original air-drying pile. Support is still essential to prevent pile sagging. Ground clearance is not only needed to provide room for forklift operation but also for ventilation to keep moisture regain in the bottom layers to a minimum. If the water table in the ground is high, a ground cover to provide a barrier to moisture vapor movement out of the soil may be desirable, particularly if the storage period is extended.

Kiln-Dried Lumber

After lumber has been kiln dried, it is often placed in a storage shed or room, unstickered, until ready for use. The ends of the boards, if not end coated, will start to pick up moisture immediately. If storage periods are short (up to 1 month) and the storage building is kept closed most of the time, little change in moisture content will occur. However, in many cases dry lumber is stored for several months or longer in buildings not designed to maintain a fixed equilibrium moisture content (EMC) condition. In some arid or semiarid regions of the United States, such as Arizona, New Mexico, and southern California, unheated dry storage will hold dried lumber at a low EMC. However, in the rest of the country, unheated dry storage will not prevent kiln-dried lumber from gradually increasing in moisture content.

The major effects of different wood storage conditions on kiln-dried wood are discussed below.

Open Sheds

An open shed that consists of a roof with no side or end walls, or a shed open on one or more sides, can be a dry storage shed for air-dried lumber awaiting sale, kiln drying, or use in the air-dried condition. However, kiln-dried and well-conditioned lumber destined for furniture or other high-grade use will deteriorate in moisture quality if stored in such a shed.

Unheated Closed Sheds

Kiln-dried lumber stored in an unheated closed shed will ordinarily absorb some moisture. Moisture is absorbed because the moisture content of the wood is usually lower than the EMC corresponding to the atmosphere within the shed. Outside weather conditions heavily affect moisture absorption by lumber stored in an unheated shed. While appreciable moisture gains in such sheds cannot be tolerated for uses such as furniture, this type of storage is being successfully used in some areas for less demanding end uses. If storage is in an unheated shed, use the lumber promptly.

The unheated shed should be located on a dry, well-drained site with a concrete or asphalt floor if possible. Also, the shed should be ventilated by adjustable openings in the roof and walls. Never use an earthen floor if the shed stands on a low, damp site. Shed doors should be closed at night and as much as possible on rainy or foggy days.

Heated Sheds

The efficiency of a closed shed in maintaining a low moisture content in lumber is enhanced if the air can be heated as required to maintain the desired EMC. Only a small amount of heat is needed to raise the temperature enough above the average outdoor temperature to keep the EMC in the 6 to 11 percent range. The following temperature increase values are typical:

Desired EMC	*Amount above outside temperature*
(Percent)	(° F)
6	25
7	20
8	15
9	12
10	8
11	5

Heat can be supplied to a closed storage shed by steam coils, radiators, or unit heaters. The system need not have a large capacity, but it should be arranged so that the temperature throughout the shed is reasonably uniform. A minimum temperature of 35° F is suggested for a steam-heated storage area, to prevent the return lines and traps from freezing. The heat supply may be controlled by an ordinary thermostat or by a more precise automatic device.

To use a thermostat, estimate or employ Weather Service data to obtain the expected mean outdoor temperature for the next 4 to 7 days. Then set the thermostat the number of degrees higher that is needed to maintain the desired EMC. Good air circulation is needed to maintain temperature and EMC uniformity. This requires the use of fans.

If the heat is to be controlled automatically, either a hygrostat or a differential thermostat may be used. A hygrostat maintains a given EMC by turning the heat on or off as needed. As the relative humidity in the shed increases, the hydroscopic element absorbs moisture and swells. The swelling activates a mechanism that turns on the heat. When the relative humidity decreases, the process is reversed.

Differential thermostats can be preset to maintain temperature in the shed that is a specific amount above the outside temperature. The differential thermostat is very dependable, economical, easily installed, and the maintenance cost is low.

Dehumidified Rooms

Electric dehumidifiers can be used in small, well-enclosed spaces. Some temperature control should be maintained, but it does not have to be precise. EMC tables should be used to select the proper relative humidity for the desired average moisture content. The dehumidifier can be turned on and off by a properly calibrated humidistat. Dehumidifiers are not as economical as heated storage sheds for large quantities of lumber, but large storage sheds have been dehumidified for corrosion control on precise metal parts during war time.

CHAPTER 10
ECONOMICS AND ENERGY

The cost of drying hardwoods normally includes the cost of stacking, handling, air drying, and kiln drying. Degrade cost should be assigned to each of the drying phases, but often these costs are overlooked.

As wood drying involves the evaporation of large quantities of water, energy can be a very important element of total cost. If fuel is to be conserved, drying procedures have other implications besides cost. Traditionally, the lowest cost and the lowest energy usage in hardwood lumber production has been achieved by combining air drying and kiln drying. Accelerated-air drying is an attractive alternative to air drying when production time is at a premium, when the good air-drying season is short, when good land for an air-drying site is not available, or when close inventory control is necessary. The current high cost of energy makes these alternative approaches worth considering.

The information in this chapter cannot serve as a complete analysis of the entire cost and energy situation, but it is intended to provide guidance for those who wish to make a current analysis of their own operation. Professional accountants and engineers can provide a more thorough analysis. State forestry personnel and extension offices are occasionally equipped to provide assistance.

Typical Costs for Various Drying Procedures

Comparative air drying and low temperature forced-air drying costs were given by Catterick (1970) for northeastern hardwoods, based on a mill with a production of 2 million board feet per year. These values have been augmented and updated to reflect January 1976 costs and have incorporated data of Cuppett and Craft (1971). Kiln drying costs, in custom drying, as of 1970 also have been augmented and updated to January 1976. These updated comparative costs are as follows:

Air-Drying Costs ($ per M bm [13])

	Average drying time	
	3 months	6 months
Land, taxes, maintenance, etc.	$1.05 (16 pct)	$1.20 (11 pct)
Interest (8 pct) on inventory	4.00 (63 pct)	8.00 (74 pct)
Taxes on lumber	.35 (5 pct)	.65 (6 pct)
Insurance	1.00 (16 pct)	1.00 (9 pct)
TOTAL	$6.40 per M bm	$10.85 per M bm

Low-Temperature-Drying Cost ($ per M bm)

	Average drying time	
	10 days	20 days
Land, taxes, maintenance, building, boiler	$3.50 (21 pct)	$4.50 (23 pct)
Interest (8 pct) on inventory includes 10-day storage)	.90 (6 pct)	1.30 (7 pct)
Taxes on lumber	.05 (0 pct)	.10 (1 pct)
Insurance	.10 (1 pct)	.15 (1 pct)
Fuel and electricity	11.00 (67 pct)	13.00 (66 pct)
Labor	.75 (5 pct)	.75 (4 pct)
TOTAL	$16.30 per M bm	$19.80 per M bm

These low-temperature costs apply to winter-time operation in north to central locations. Fuel costs would be lower during summer operation.

[13] Thousand board feet.

Kiln-Drying Cost [14] ($ per M bm)

	Kiln drying time	
	5-7 days	10-15 days
Equipment depreciation	$1.40 (6 pct)	$2.80 (8 pct)
Insurance	.80 (3 pct)	.80 (2 pct)
Maintenance	1.95 (8 pct)	1.95 (6 pct)
Supplies	.70 (3 pct)	.70 (2 pct)
Sticker replacement	.50 (2 pct)	.50 (1 pct)
Steam and electricity	8.40 (35 pct)	16.80 (48 pct)
Labor	7.95 (33 pct)	7.95 (23 pct)
Land and building	1.30 (5 pct)	2.00 (6 pct)
Interest (8 pct) on inventory (includes 10 day storage)	.80 (3 pct)	1.50 (4 pct)
TOTAL	$23.80 per M bm	$35.00 per M bm

[14] Presentation by E. M. Conway, Conway Corp., Grand Rapids, Mich., to Joint Meeting Midwest and Wisconsin-Michigan Wood Seasoning Association, Antigo, Wis., May 1970.

General company selling and administrative expenses and degrade costs are not included in the above data. Degrade costs are discussed in a following section.

Handling and stacking costs are often included with drying costs, but they are not included in the estimates above. Conway has estimated handling and stacking costs in a hardwood air-drying and kiln-drying operation.

Handling Cost ($ per M bm)

Labor	$14.10 (76 pct)
Equipment depreciation	1.50 (8 pct)
Equipment maintenance	1.25 (7 pct)
Land and building	.70 (4 pct)
Insurance	.40 (2 pct)
Miscellaneous	.50 (3 pct)
TOTAL	$18.45 per M bm

It should be emphasized that drying costs and energy usage can be controlled, however, by following the technical information and suggestions listed in the various previous sections of this handbook and in the Dry Kiln Operator's Manual and Air Drying of Lumber. Usually, the biggest cost in energy savings can be made by air-drying rather than kiln drying green lumber.

Degrade Costs and Causes

Not included in the previous costs is degrade, and degrade can be the biggest cost of all, especially in air drying. Cuppett (1966) studied degrade in Appalachian air drying yards. He reported an average loss, adjusted to 1976, of over $16 per 1,000 board feet, although at some mills the losses were controlled to less than $3 per 1,000 board feet. Hanks and Peirsol (1975) estimated air drying degrade losses for 10 hardwoods dried under good conditions. Degrade values ranged from 0 to 5 percent of the lumber value. A recent study in Pennsylvania (Bean and Spoerke, 1973) has shown that, under careful air drying procedures and terminating the drying when the wood was at 20 percent moisture content, degrade for 4/4 oak was between 1 and 2 percent of the lumber value and for 8/4 oak, 3 to 4 percent. With proper procedures and attention degrade can be controlled and almost eliminated.

In all of these studies, checks were the most common defect, followed by splits, and then warp. Cuppett (1965) has analyzed the major causes of degrade with the first listing the most common cause.

Checks

1. Lack of roofing.
2. Board edges exposed at bunk spaces.
3. Stickers not flush with ends of boards.
4. Too rapid drying due to excessive exposure of lumber stacks.

splits

1. Too few stickers.
2. Lack of roofing or poor roofing.
3. Stickers not flush with ends of boards.

Warp

1. Poor sticker alinement.
2. Poor bunk alinement.
3. Lack of sufficient stickers.
4. Foundation out of level.
5. Thick and thin lumber in same course in stack.

Stain

1. *No* chemical dip.
2. Use of green stickers.
3. Use of wide stickers.
4. Base of piles too low.
5. Grass and weeds growing between stacks.
6. Poor yard orientation or location.

Often surface checks are not noted until after the lumber has been air dried, kiln dried, and undergone some manufacturing. For a company trying to identify the cause (did it occur in air drying or kiln drying?) a close examination of the checks with a 10 × magnifying glass may show the checks to be full of dirt particles. Such evidence is good but not a completely reliable indication that the checks were opened during air drying. Clean checks are almost always attributed to kiln-drying difficulties, usually too dry initial conditions. Although the surface checks in hardwoods normally close as drying is completed, exposure to very high relative humidities, saturated steam, or water will cause the checks to stay open after redrying. Dry wood that is wetted also may check as it dries again.

A certain amount of drying degrade is unavoidable and can be attributed to inherent characteristics of the wood itself. Cuppett (1975) has established rough guidelines on the minimum amount of degrade for several hardwoods in the Appalachian region:

Species	Thickness	Allowable losses in percent of air-dry lumber value
White and red oak	4/4 and 5/4	1.0
White and red oak	6/4 and 8/4	2.0
Poplar, basswood, and cucumber	4/4 and 5/4	.5
Poplar, basswood, and cucumber	6/4 and 8/4	1.0
Maple and beech	4/4 and 5/4	2.0
Maple and beech	6/4 and 8/4	3.0

If drying degrade exceeds allowable limits, chapter 9 in the Dry Kiln Operator's Manual and chapter 6 in Air Drying of Lumber discuss the basic causes and remedies for drying defects.

A Cost Accounting Approach

Two recent reports have looked at drying costs in detail. Engalichev and Eddy (1970) have prepared a computer program to evaluate the cash flow situation for purchasing a new kiln, a low-temperature kiln, or a forced-air dryer. Goulet and Ouimet (1968) have assembled a cost accounting approach for calculating the cost of drying-air, accelerated-air, kiln, or various combinations of these methods. Goulet and Ouimet's approach has been adapted and is included in this section, in order to permit an operator to assess drying costs for his own operation. If, in working with this method, more wood is air dried annually than is kiln dried (or vice versa), the analysis must be run twice, once for air drying and once for kiln drying. Note that in using this general approach for specific cases, not all items will have charges or costs. Also note that in the example many charges will be only a few pennies per thousand board feet, and therefore it is not necessary to establish these minor charges with a great deal of accuracy. Degrade, labor, and energy are major expenses and care should be exercised to determine these costs accurately.

To use the method presented here, the numerical values for the 66 items must be ascertained and inserted in the blanks of the section, "Basis for Calculations." Then these numbers are added, multiplied, and divided as shown in the section headed "Calculations" in order to obtain the charges per thousand board feet.

Method

Basis for Calculations

A. Direct investments (total costs)
- Buildings, sheds, etc. _____ (1)
- Kiln, auxiliary equipment (including boiler) _____ (2)
- Stickers _____ (3)
- Pile roofs _____ (4)
- Pile bases, bolsters _____ (5)
- Total direct investment (lines 1 thru 5) _____ (6)

B. Amortization period for direct investments (years)
- Buildings, sheds, etc. _____ (7)
- Kiln, auxiliary equipment _____ (8)
- Stickers _____ (9)
- Pile roofs _____ (10)
- Pile bases, bolsters _____ (11)

C. Quantity of wood dried annually (M bm) _____ (12)
(If all air-dried wood is not kiln-dried, two entirely separate calculations should be made)

D. Annual interest rate (percent as decimal) _____ (13)

E. Drying yard investments (Total costs)
- Storage sheds for stickers, dried lumber, etc. _____ (14)
  (should not duplicate item No. 1)
- Permanent road construction, rail access, etc. _____ (15)
- Temporary road construction (includes drying alleys) _____ (16)
- Fences _____ (17)
- Lighting systems _____ (18)
- Drainage systems _____ (19)
- Sprinkler systems _____ (20)
- Total (lines 14 thru 20) _____ (21)

F. Amortization period for drying yard investments
- Storage sheds for stickers, dried lumber, etc. _____ (22)
- Permanent road construction, rail access, etc. _____ (23)
- Temporary road construction (includes drying alleys) _____ (24)
- Fences _____ (25)
- Lighting systems _____ (26)
- Drainage systems _____ (27)
- Sprinkler systems _____ (28)

G. Maintenance and repair of yard, percent of line 21 ($/yr) _____ (29)
- Plus snow removal ($/yr) _____ (30)
- Plus yard cleaning ($/yr) _____ (31)
- Plus annual lighting expense (bulbs and electricity) ($/yr) _____ (32)

H. Land area (ft^2)
- Air drying area (include space between the piles) _____ (33)
- Road area (refers to line 15, roads) _____ (34)
- Area for buildings, kiln, boiler, etc. _____ (35)
- Total (lines 33 thru 35) _____ (36)

I. Land value ($/$ft^2$) _____ (37)

J. Taxable values ($)
- Land (line 36 times line 37) _____ (38)
- Buildings (line 1) _____ (39)
- Kilns, equipment (line 2) _____ (40)
- Fences, lighting, drainage, sprinklers (line 17 + 18 + 19 + 20) _____ (41)
- Total (lines 38 thru 41) _____ (42)

K. Insurable values ($)
- Direct investments (line 6) _____ (43)
- Storage sheds (line 14) _____ (44)
- Fences (line 17) _____ (45)
- Wood (line 62 times line 64) _____ (46)
- Total (lines 43 thru 46) _____ (47)

L. Tax rate to be applied to line 42 (percent as decimal) _____ (48)

M. Insurance rate to be applied to line 47 (percent as decimal) _____ (49)

N. Stacking time (M bm/hr) _____ (50)

O. Hourly stacking cost (include machinery, labor, and fringe benefits ($/hr) _____ (51)

P. Forklift time (M bm/hr) _____ (52)

Q. Hourly forklift cost (include machine cost, labor, and fringe benefits) ($/hr) _____ (53)

R. Time spent each day observing and running kilns, boilers, etc. (hr) _____ (54)

S. Hourly wage rate and fringe benefits for kiln operator and auxiliary equipment including boiler ($/hr) _____ (55)

T. Maintenance of kilns and boiler, a percentage of line 2 (in dollars) _____ (56)

U. Annual office costs attributed to drying (in dollars) _____ (57)

V. Energy costs (boiler costs should be included in lines 2 and 56, not here)
- Annual fuel consumption (gal. or 1,000 ft^3) _____ (58)
- Fuel cost ($/gal. or 1/1,000 ft^3) _____ (59)
- Annual electrical usage attributed to drying (kWh) _____ (60)
- Electrical cost ($/kWh) _____ (61)

W. Average price of lumber ($/M bm) _____ (62)

X. Average drying degrade, based on lumber value (percent as decimal) _____ (63)

Y. Average daily volume of lumber on yard and in kilns on any given day (M bm) _____ (64)

Z. Total capacity of kilns _____ (65)

AA Average length of kiln run (include loading and unloading time) _____ (66)

Calculations

Values are computed in dollars per 1,000 board feet (numbers are line numbers from the previous section):

(1)/[(7) x (12)]	=	These values are amortization for direct investment
(2)/[(8) x (12)]	=	
(3)/[(9) x (12)]	=	
(4)/[(10) x (12)]	=	
(5)/[(11) x (12)]	=	
(6)/[(13) x (12)]	=	This is interest on direct investment
(14)/[(22) x (12)]	=	These are amortization values for air-drying investments
(15)/[(23) x (12)]	=	
(16)/[(24) x (12)]	=	
(17)/[(25) x (12)]	=	
(18)/[(26) x (12)]	=	
(19)/[(27) x (12)]	=	
(20)/[(28) x (12)]	=	
[(21) x (13)]/(12)	=	This is interest on air-drying investments
[(29)+(30)+(31)+(32)]/(12)	=	This is yard maintenance & repair
[(36) x (37) x (13)]/(12)	=	This is land interest

[(42) x (48)]/(12)	=	This is taxes on kiln and air drying yard
[(47) x (49)]/(12)	=	This is total insurance
(50) x (51)	=	This is stacking cost
(52) x (53)	=	This is forklift cost
[(54) x (55) x (66)]/(65)	=	This is kiln labor
(56)/(12)	=	This is kiln maintenance
(57)/(12)	=	This is office overhead
[(58)x(59)+(60)x(61)]/(12)	=	This is energy cost
[(62) x (64) x (13)]/(12)	=	This is interest on inventory
(62) x (63)	=	This is degrade
Total of all	=	($/M bm)

Example

The following represents a hypothetical hardwood air and kiln drying operation in a northern climate and should provide guidelines for the expected data necessary to perform the calculations.

Data

$ 15,000 (1)	10 yr (23)	$ 400 (45)
$150,000 (2)	10 yr (24)	$540,000 (46)
$ 7,000 (3)	10 yr (25)	$717,900 (47)
$ 500 (4)	10 yr (26)	0.04 (48)
$ 1,000 (5)	10 yr (27)	0.01 (49)
$173,500 (6)	10 yr (28)	.40/hr (50)
20 yr (7) (using 1%)	$81 (29)	$ 7.20/hr (51)
20 yr (8)	$1,000 (30)	.15/hr (52)
3 yr (9)	$ 300 (31)	$ 8.50/hr (53)
5 yr (10)	$ 200 (32)	16 hr (54)
5 yr (11)	12,000 ft² (33)	$ 5.20/hr (55)
5,500 M bm/yr (12)	12,000 ft² (34) (using 2%)	$ 3,000 (56)
0.08 (13)	15,000 ft² (35)	$ 10,000 (57)
$ 4,000 (14)	39,000 ft² (36)	9,000,000 ft³ (58)
none (15)	$ 0.10/ft² (37)	$1.80/1,000 ft³ (59)
$ 1,200 (16)	$ 3,900 (38)	10,000 kWh (60)
$ 400 (17)	$ 15,000 (39)	$0.03/kWh (61)
$ 500 (18)	$150,000 (40)	$180/M bm (62)
$ 1,000 (19)	$ 2,900 (41)	0.02 (63)
$ 1,000 (20)	$171,800 (42)	3,000 M bm (64)
$ 8,100 (21)	$173,500 (43)	100 M bm (65)
10 yr (22)	$ 4,000 (44)	10.5 days (66)

Calculations

		$M bm	
15,000/[20 × 5500]	=	0.14	Amortization
150,000/[20 × 5500]	=	1.36	
7,000/[3 × 5500]	=	.42	
500/[5 × 5500]	=	.02	
1,000/[5 × 5500]	=	.04	
173,500 × .08/5500	=	2.52	Interest
4,000/[10 × 5500]	=	.07	Amortization
0/[10 × 5500]	=	.00	
1,200/[10 × 5500]	=	.02	
400/[10 × 5500]	=	.01	
500/[10 × 5500]	=	.01	
1,000/[10 × 5500]	=	.02	
1,000/[10 × 5500]	=	.02	
8100 × .08/5500	=	.12	Interest
1581/5500	=	.29	Yard maintenance & repair
39,000 × .1 × .08/5500	=	.06	Land interest
171,800 × .04/5500	=	1.25	Taxes
717,900 × .01/5500	=	1.31	Insurance
.4 × 7.20	=	2.88	Stacking costs
.15 × 8.50	=	1.23	Forklift costs and labor
16 × 5.20 × 10.5/100	=	8.74	Labor, kiln, and boiler
3,000/5500	=	.55	Kiln maintenance
10,000/5500	=	1.82	Office overhead
[9,000,000 × (1.80/1000)]+ [10,000 × .03] /5500	=	3.00	Energy
180 × 3,000 × .08/5500	=	7.85	Inventory interest
180 × .02	=	3.60	Degrade
TOTAL	=	$37.35/M bm	

Energy Considerations

Energy usage in kiln drying is significant. The energy used in the kiln can be reduced by full air drying and by efficient kiln operation. The energy saving by air drying is illustrated in table 27 where generalized energy usage is given.

A recent Maine extension bulletin (Shottafer and Shuler, 1974) presented a method of estimating the individual components of energy usage in kiln drying. In the example presented in this extension bulletin, energy usage is broken down for a 25,000 board-foot charge of 4/4 sugar maple, drying from 70 to 10 percent moisture content in 14 days in a prefabricated, aluminum, insulated kiln.

Energy Use	Million Btu's per 25,000 board feet
Heating wood and residual water	4.3
Water evaporation	49.8
Venting	18.0
Building Heat Losses	35.7

(The building heat losses, in turn, can be broken down into four components: through the walls, 29 'pct; through the roof, 7 pct; through the door, 12 pct; and through the floor, 52 pct.)

The energy used for heating the wood and for evaporating the water, in the above listing, cannot be reduced (except through air drying; air drying will actually reduce energy use in all four items). In a properly operating and adjusted kiln, vent losses can be reduced somewhat, but not greatly. However, savings can be made in building losses—for example, the floor can be insulated or the kiln can be enclosed in another building (but vented to the outside). With the enclosure, the heat lost through the kiln walls can be utilized to heat the building that encloses the kiln.

Kiln wall insulation can also be increased to reduce wall losses. If the insulation and wall thickness is increased from 2 to 4 inches in an aluminum prefab-type wall, the savings in the above example would be about 5 million Btu's per 25,000 board feet, or approximately $250 annually. However, thicker walls and added insulation would add several thousand dollars to the building's cost.

The following listing (Wengert, 1974) should be helpful in increasing the efficient use of energy during kiln drying.

1. Use as much air drying or forced-air drying as possible—preferably drying to 25 percent moisture content or less.

2. Do not use steam spray or water spray in the kiln except during the conditioning. Let the moisture coming out of the wood build up the humidity to the desired level. Steam may have to be used, however, when very small wet-bulb depressions are required. (Dry Kiln Operator's Manual, p. 160-162.)

Table 27. -*Energy consumption and cost estimates in kiln drying hardwood lumber* [1,2]

From	Energy to kiln dry per M bm [3]	Total energy used per M bm [4]		Total energy cost [5] for kiln drying [4]			
				Per M bm		Per 30 M bm kiln charge	
		Good	Intermediate	Good	Intermediate	Good	Intermediate
	Million Btu	*Million Btu*	*Million Btu*	*Dollars*	*Dollars*	*Dollars*	*Dollars*
Air-dried (22-7=15 pct)	0.518	1.294	2.587	1.90	3.80	58	115
Partly air-dried (37-7=30 pct)	1.035	2.587	5.175	3.80	7.60	115	228
Green (47–7=40 pct)	1.380	3.450	6.900	5.05	10.10	153	305

[1] Assumptions: Av. sp. gr. of wood—0.55
water/1 pct MC/M bm of rough, 4/4 lumber—33.95 lb
Energy (Btu) to evaporate 1 pct MC/M bm—34,561

[2] Does not include electrical energy for fans.

[3] 100 pct efficiency of kiln.

[4] Kiln efficiencies of 40 pct for "Good" and 20 pct for "Intermediate;" if 50 pct efficiency is maximum possible in well-insulated, virtually perfect condition, steam-heated kiln, these estimates seem practical and are borne out generally by industry experience.

[5] Rate of $1.50 per million Btu.

3. Repair and talk all leaks, cracks, and holes in the kiln structure and doors to prevent unnecessary venting and loss of heat. Make sure the doors close tightly, especially at the top. Temporarily plug any leaks around the doors with rags, and order new gaskets, shimming strips, or hangers if necessary. In a track kiln, use sawdust-filled burlap bags to plug leaks around tracks. Adjust and repair the vents so that, when they are closed, they close tightly.

4. For brick or cinder block kilns, maintain the moisture vapor-resistant kiln coating in the best possible condition. This will prevent the walls and the roofs from absorbing water. Dry walls conduct less heat to the outside.

5. For outdoor aluminum kilns *only*, paint the exterior walls and roof a dark color to increase the wall temperature by solar heat and reduce heat loss from the kiln. Check to insure that weep holes are open, not plugged. (Painting would be disastrous on permeable walls like brick or cinder block.)

6. In many kilns, more heat is lost through the roof than through the walls. Much of this loss is due to wet insulation. To reduce heat losses, consider installing a new roof or repairing an old one. Add additional insulation if necessary. Make sure the interior vapor barrier or coating is intact (see suggestion 4).

7. Install or repair baffling to obtain a high, uniform air velocity through the lumber and prevent short circuiting the air travel. This pays off in saving energy. Reverse air circulation only every 6 hours.

8. Research has shown that in the early stages of drying, high air velocities (more than 600 ft/min) can accelerate drying. In the late stages, low velocities (250 ft/min) are as effective as high velocities and use less energy. Therefore, arrange to adjust fan speeds if possible during a run.

9. Have the recorder-controller calibrated and checked for efficient operation. The kiln should not oscillate between periods of venting and steam spraying and should not vent and steam at the same time. (Dry Kiln Operator's Manual, p. 67-73.)

10. Check the remainder of the equipment. Are traps working? Do traps eject mostly hot water with little, if any, steam? Do valves close tightly? Are heating coils free of debris? Is valve packing tight? Is there adequate water for the wet bulb?

11. Accurately determine the moisture content of the wood you are drying. Do not waste energy by overdrying or by taking too long because your samples do not represent the load. Try to plan your loads so that, when they are sufficiently dry, someone will be available to shut off the kiln (and, if possible, to unload it, reload it, and start it again). Do not allow a kiln load of dry lumber to continue to run overnight or through a weekend.

12. Unload and reload the kiln as fast as possible. Avoid doing this until the air temperature has warmed up from the morning low—do not cool the kiln unnecessarily.

13. In a battery of adjacent kilns, avoid having one kiln being unloaded or loaded while the adjacent kiln is at 180° F or other high temperature.

14. During nonuse periods, close all valves tightly and keep kiln doors closed. Use a small amount of heat, if necessary, to prevent freezing of streamlines and waterlines.

15. Use accelerated schedules where possible. Check the chapter on Conventional Kiln Drying for accelerating schedules with minimum risk. The higher the temperature for drying, the more efficiently energy is used.

16. If possible, reduce the length of time used for conditioning; some low-density hardwoods can be conditioned in 6 hours.

17. Finally, check with the manufacturer of your equipment and find out if you can lower steam pressures or reduce gas or oil flow rates during periods of constant dry-bulb temperature. Also have the manufacturer check the burner for top efficiency.

Literature Cited

Beall, F. C. and G. R. Spoerke
1973. Degrade of oak lumber as influenced by drying. For. Prod. J. 23(11):25–30.

Catterick, J.
1970. Costs of low-temperature drying. North. Logger and Timber Proc. 18(9):18, 50, 60.

Cuppett, D. G.
1965. How to determine seasoning degrade losses in sawmill lumber-yards. USDA For. Serv. Res. Note NE–32. Northeast For. Exp. Stn., Upper Darby, Pa. 7 p.

Cuppett, D. G.
1966. Air drying practice in the central Appalachians. USDA For. Serv. Res. Pap. NE–56. Northeast For. Exp. Stn., Upper Darby, Pa. 19 p.

Cuppett, D. G. and E. P. Craft
1971. Low-temperature drying of 4/4 Appalachian red oak. For. Prod. J. 21(1):34–38.

Engalichev, N. and W. E. Eddy
1970. Economic analysis of low-temperature kiln in processing softwood lumber for market. Univ. of N. H. Ext. Bull. No. 178.

Goulet, M. and M. Ouimet
1968. [Determination of costs in wood seasoning.] Univ. of Laval (Quebec) Tech. Note No. 5. 52 p.

Hanks, L. F. and M. K. Peirsol
1975. Value loss of hardwood lumber during air drying. USDA For. Serv. Res. Pap. NE–309. Northeast For. Exp. Stn., Upper Darby, Pa. 10 p.

Rasmussen, E. F.
1961. Dry kiln operator's manual. U.S. Dep. Agric., Agric. Handb. 188. 197 p., illus.

Rietz, R. C. and R. H. Page
1971. Air drying of lumber: A guide to industry practice. U.S. Dep. Agric., Agric. Handb. 402. 110 p., illus.

Shottafer, E. and C. E. Shuler
1974. Estimating heat consumption in kiln drying lumber. Univ. Maine, Life Sciences and Ag. Exp. Stn. Tech. Bull. No. 73. 25 p.

Wengert, E. M.
1974. How to reduce energy consumption in kiln drying lumber. USDA For. Serv. Res. Note FPL–0228. 4 p. For. Prod. Lab., Madison, Wis.

APPENDIX A—SPECIES, THICKNESSES, DRYING SCHEDULES, AND COMMENTS

Common name	Thickness	Kiln schedule[1]	Conservative schedule[2]	Other
Apple	4/4, 5/4, 6/4	T6-C3	No	—
	8/4	T3-C3	No	—
Ash, black	4/4, 5/4, 6/4	T8-D4	Yes	See appendix B for mixed green and black.
	8/4	T5-D3	Yes	—
Ash: green, white	4/4, 5/4, 6/4	T8-B4	Yes	Possible acceleration for 4/4, 5/4 green ash is T8-C4. See appendix B.
	8/4	T5-B3	Yes	
Aspen	4/4, 5/4, 6/4	T12-E7	No	Use for No. 1 Common and Better and for crating lumber; middle grades—see appendix C.
	8/4	T10-E6	No	See appendix C.
Basswood	4/4, 5/4, 6/4	T12-E7	Yes	Use T9–E7 for white color.
	8/4	T10-E6	Yes	—
Beech	4/4, 5/4, 6/4	T8-C2	No	See special report; degrade control important.
	8/4	T5-C1	No	Do.
	1-in. squares	T8-C3	No	Do.
	2-in. squares	T5-C2	No	Do.
Birch, paper	4/4, 5/4, 6/4	T10-C4	Yes	—
	8/4	T8-C3	Yes	—
	1-in. squares	T10-C6	Yes	Use T5–C6 for white color.
	2-in. squares	T8-C4	Yes	Use T5–C4 for white color.
Birch, yellow	4/4, 5/4, 6/4	T8-C4	Yes	—
	8/4	T5-C3	Yes	—
	1-in. squares	T8-C5	Yes	—
	2-in. squares	T5-C4	Yes	—
Buckeye, yellow	4/4, 5/4, 6/4	T10-F4	Yes	—
	8/4	T8-F3	Yes	—
Butternut	4/4, 5/4, 6/4	T10-E4	Yes	—
	8/4	T8-E3	Yes	—
Cherry, black	4/4, 5/4, 6/4	T8-B4	Yes	—
	8/4	T5-B3	Yes	—
Chestnut	4/4, 5/4, 6/4	T10-E4	Yes	—
	8/4	T8-F4	Yes	—
Cottonwood: normal	4/4, 5/4, 6/4	T10-F5	Yes	—
	8/4	T8-F4	Yes	—
wet streak	4/4, 5/4, 6/4	T8-D5	No	—
	8/4	T6-C4	No	—
Dogwood	4/4, 5/4, 614	T6-C3	Yes	—
	8/4	T3-C2	Yes	—
	Shuttles	T3-B2	Yes	—
Elm: American, slippery	4/4, 5/4, 6/4	T6-D4	Yes	American elm, soft type, use T8-D4; air dry hard type first, then T2–D5.

APPENDIX A–SPECIES, THICKNESSES, DRYING SCHEDULES, AND COMMENTS-Cont.

Common name	Thickness	Kiln schedule [1]	Conservative schedule [2]	Other
	8/4	T5-D3	Yes	
Elm: rock, cedar, winged	4/4, 5/4, 6/4	T6-B3	Yes	—
	8/4	T6-C3	Yes	—
Hackberry	4/4, 5/4, 6/4	T8-C4	Yes	—
	8/4	T6-C3	Yes	—
Hickory	414, 5/4	T8-D3	Yes	—
	6/4		—	See table 17, Dry Kiln Operator's Manual.
	8/4	—	—	Do.
	Handle stock	—	—	Do.
Holly	4/4, 5/4, 6/4	T6-D4	Yes	—
	8/4	T4-C3	Yes	—
Hophornbeam (ironwood)	4/4, 5/4, 6/4	T6-B3	No	—
	8/4	T3-B1	No	—
Locust, black	4/4, 5/4, 6/4	T6-A3	No	—
	8/4	T3-A1	No	—
Magnolia	4/4, 5/4, 6/4	T10-D4	Yes	For cucumbertree, use yellow-poplar schedule,
	8/4	T8-D3		
Maple, sugar (hard)	4/4, 5/4, 6/4	T8-C3	Yes	Use T1-C5 for whiter color or see appendix C.
	8/4	T5-C2	Yes	
	1-in. squares	T8-C4	Yes	—
	2-in. squares	T5-C3	Yes	—
Oak, lowland southern (red and white)	4/4, 5/4	T2-C1	Yes	See appendix B.
	6/4, 8/4			Air dry to 20 pct MC.
Oak, upland red	4/4, 5/4	T4-D2	Yes	See appendix B.
	6/4, 8/4	T3-D1	Yes	
Oak, upland white	4/4, 5/4	T4-C2	Yes	See appendix B.
	6/4, 8/4	T3-C1	Yes	
Osage-orange	4/4, 5/4, 6/4	T6-A2	No	—
	8/4	T3-A1	No	—
Pecan	4/4, 5/4, 6/4	T8-D3	Yes	Bitter pecan should be air dried first.
	8/4	T6-D1	Yes	—
Persimmon	4/4, 5/4, 6/4	T6-C3	—	—
	8/4	T3-C2	—	—
	Golf club heads	T3-C2	Yes	—
	Shuttles	T3-B2	Yes	—
Sassafras	4/4, 5/4, 6/4	T8-D4	Yes	—
Sweetgum: sapwood (sap gum)	4/4, 5/4, 6/4	T12-F5	Yes	For sap gum lumber containing large amounts of heartwood, use red gum schedules.
	8/4	T1l-D4	Yes	
	1-in. squares	T12-F6	Yes	—
	2-in. squares	T11-D5	Yes	—
heartwood (red gum)	4/4, 5/4, 6/4	T8-C4	Yes	—
	8/4	T5-C3	Yes	—
Sycamore	4/4, 5/4, 6/4	T6-D2	Yes	—
	8/4	T3-D1	Yes	—

APPENDIX A—SPECIES, THICKNESSES, DRYING SCHEDULES, AND COMMENTS—Cont.

Common name	Thickness	Kiln schedule[1]	Conservative schedule[2]	Other
Tupelo, black	4/4, 5/4, 6/4	T12-E5	Yes	See table 17, Dry Kiln Operator's Manual.
	8/4	T11-D3	Yes	Do.
Tupelo, swamp	4/4, 5/4, 6/4	T10-E3	Yes	See table 17, Dry Kiln Operator's Manual.
	8/4	T8-D2	Yes	Do.
Tupelo, water	4/4, 5/4, 6/4	T6-H2	No	See tables 16 and 17 Dry Kiln Operator's Manual.
	8/4			Air dry first.
Walnut, black	4/4, 5/4, 6/4	T6-D4	Yes	Steam only green stock.
	8/4	T3-D3	Yes	—
	Gunstock blanks	T3-D4	Yes	End coating required; T5–D4 possible acceleration.
Willow, black	4/4, 5/4, 6/4	T10-F4	Yes	Air dry butt material
	8/4	T8-F3	Yes	Do.
Yellow-poplar	4/4, 5/4, 6/4	T11-D4	Yes	—
	8/4	T10-D3	Yes	

[1] See page 119 of Dry Kiln Operator's Manual.

[2] "Yes" indicates schedule probably can be accelerated by following procedures on pages 124–126 of Dry Kiln Operator's Manual; "No" suggests the recommended kiln schedule probably is close to optimum. All 8/4 thickness conservative schedules can be modified to 180° F dry bulb at 11 pct moisture content or below.

APPENDIX B—MIXED DRYING OF SOME SPECIES BY SIMPLIFIED SCHEDULES

Eighteen southern hardwoods growing on upland sites can be grouped for kiln drying by simplified schedules:

Species	Simplified kiln schedule No. for 4/4 lumber [1]
EASY-DRYING WOODS	
Ash	
Black	III
Green, white	III
Elm	
American (soft type)[2], slippery	I, III
American (hard type) [2]	I
Cedar: rock, winged	I
Hackberry	III
Hickory: pecan [3]	II, I
Maple: red, silver	III
Magnolia: sweetbay	IV
Sweetgum	
Sapwood (not over 15 pct heart)	V
Heartwood (red gum)	III
Tupelo: black (black gum), tupelo	V
Yellow-poplar (poplar)	IV
DIFFICULT WOODS	
Oak	
Red oak	VI
White oak	VI

[1] Where a wood has two different simplified schedules listed, see the distinctions in the schedule tables.

[2] Soft type is forest grown, has narrow growth rings, specific gravity (green volume basis) of 0.40-0.48, and may be sold as gray elm; hard type is open growth, has wide rings, and specific gravity of 0.44-0.52.

[3] Divided into bitter pecan (water hickory, *Carya aquatica)* and sweet pecan (pecan, *C. illinoensis;* and nutmeg hickory, *C. myristicaeformis).*

In some cases the same schedule is shown for woods that have greatly different green moisture content values. In these cases, two columns of moisture content schedule change points are shown. The dry-bulb and wet-bulb temperature settings for these woods are governed by the average moisture content of the wettest half of the kiln sample of the species or group of species that are slowest in reaching the designated moisture content level in its own series.

The simplified kiln schedules I through VI are listed in table B1.

Table B1 –*Simplified kiln schedules I through VI for drying 4/4 material of mixed species*

Moisture content		Dry-bulb temperature	Wet-bulb temperature
Lower	Higher		
Pct	*Pct*	*° F*	*° F*
	I. *American Elm (Hard Type), Rock Elm, Hickory and Bitter Pecan Heartwood*		
Rock, elm winged elm	Hard -type American elm, hickory, pecan		
Above 35	Above 50	120	115
35	50	120	113
30	35	130	100
25	25	140	105
18	18	180	130
	II. *Hickory, Sweet Pecan, and Bitter Pecan Sapwood*		
	Above 50	125	120
	50	125	118
	40	130	114
	30	150	112
	20	180	130
	III. *Black, Green, and White Ash; American Elm (Soft Type); Hackberry; Red and Silver Maple; and Sweetgum Heartwood*		
Green and white ash; hackberry; sweetgum heartwood	Black ash; soft-type American elm; red and silver maple		
Above 40	Above 50	130	123
40	50	130	118
32	35	140	95
18	18	180	130
	IV. *Magnolia* and *Yellow-Poplar*		
	Above 50	140	133
	50	140	128
	35	150	120
	18	180	130
	V. *Black Gum, Upland Tupelo, and Sweetgum Sapwood*		
	Above 60	160	150
	60	160	145
	40	160	130
	25	170	130
	18	180	130
	VI. *Upland Red and White Oak*		
White	*Red*		
Above 40	Above 50	110	106
40	50	110	105
34	40	110	102
30	32	120	106
25	25	130	100
20	20	140	95
15	15	180	130

APPENDIX C—SPECIAL KILN SCHEDULES FOR SPECIAL PURPOSES

Most kiln operators have their own special kiln schedules for particular circumstances. Some of these take into account specific conditions for their unique situation. But such special situations are almost infinite. A limited number of special hardwood schedules is given on pages 127 to 129 of the Dry Kiln Operator's Manual, Some additional special schedules are included here for these species and purposes:

Aspen—to minimize collapse in 4/4 to 8/4 material.

Maple-to retain the whitest color possible in 4/4 and 5/4 stock, and to dry 6/4 and 8/4 material with mineral streak with little honeycombing.

Upland red oak—to minimize honeycomb and degrade in bacterially infected 4/4 stock, and for presurfacing to accelerate drying of 4/4 material.

These have been given the designation of "C" for Appendix C, "S" for special schedule and a number. Such a combination should set it off from the basic and simplified schedules:

Table CS1. *–Aspen, low-to moderate-collapse kiln schedules*

Moisture content at start of step	4/4, 5/4, 6/4 stock		8/4 stock	
	Dry-bulb temperature	Wet-bulb temperature	Dry-bulb temperature	Wet-bulb temperature
Pct	*F*	° *F*	° *F*	° *F*
Above 70	110	100	140	133
70	110	100	140	130
60	115	100	140	125
50	120	100	140	120
40	130	105	140	110
30	150	110	[1]150	100
25	150	110	170	120
20	[1]180	135	170	120
[2]1 2	180	130	180	130
[3]8	180	130	200	140
Equalize[4]	173	130	200	150
Condidtion	180	170	—	—

[1]Operate with vents closed, no steam spray until equalizing.
[2]For 8/4, continue until very wettest sample is 8 pct moisture content.
[3]For 8/4, target is 3¼ to 4¼ pct moisture content; time on this step about 5 dyas.
[4]For 8/4, time on this step about 2 days.

Table CS2. *–Maple, whitest color 4/4 and 5/4 schedules*

4/4 and 5/4 stock initial moisture content 50 percent or lower			4/4 and 5/4 stock, initial moisture content 51 percent or higher		
Moisture content at start of step	Dry-bulb temperature	Wet-bulb temperature	Moisture content at start of step	Dry-bulb temperature	Wet-bulb temperature
Pct	° *F*	° *F*	*Pct*	° *F*	° *F*
			Above 40	105	95
			40	108	95
above 28	105	95	35	108	50
28	108	95	30	108	85
24	108	90	26	108	80
20	108	85	20	115	80
16	115	80	16	125	80
13	125	80	12	160	105
10	160	105			
Conditioning	170	154	Conditioning	170	154

Table CS3. *–Maple,* [1] *mineral streak stock 6/4 and 8/4 schedule for minimum honeycombing*

Moisture content [2]		Dry-bulb temperature	Wet-bulb temperature
Average for wettest half of kiln samples	Darkest zone fin wettest sample		
Pct	*Pct*	*° F*	*° F*
Above 40		110	106
40		110	105
35		110	102
30		120	106
25		125	95
20		130	85
	30	140	95
	25	150	100
	20	160	110
	15	180	130

[1] This schedule also should be suitable for mineral-streaked yellow birch.
[2] Kiln samples should be 2 feet longer than normal so that three or four intermediate moisture content tests (page 105, Dry Kiln Operator's Manual) can be made. For green stock, start with normal kiln sample procedure. For air-dried stock, cut both an average section and a "darkest zone" section at the start. Cut out the darkest, wettest appearing portion of the latter section with a bandsaw. Weigh and ovendry this portion sseparately to determine when temperature of 140° F and higher cn be used. After the final drying condition has run 1 day, revert the full-size kiln sample method to start equalizing and conditioning.

Table CS4. *—Upland red oak, bacterially infected 4/4 schedule for minimizing honeycomb and degrade*

Moisture content at start of step	Dry-bulb temperature	Wet-bulb temperature
Pct	*° F*	*° F*
Above 52	105	102
52	105	101
45	105	99
40	105	97
35	110	95
30	115	85
25	120	85
20	130	85
15	150	100
11	170	120
Equalize	170	127
Condition	175	165

[1] Material with advanced infection should be air dried in a sheltered location or forced air dried by a mild 8/4 procedure until the wettest half of the infected kiln samples have a moisture content of 22 percent or lower. Kiln drying then can be started using 120° F dry-bulb and 110° F wet-bulb temperatures for 16 to 24 hours. Then the above schedule can be followed in accordance with the moisture content of the controlling samples. Material in the early stages of infection can be dried by this schedule from the green, partly air dried, or air dried state in accordance with the general procedures in chapter 5.

Table CS5. —*Presurfaced upland oak 4/4 schedule* [1]

Moisture content for:		Dry-bulb temperature	Wet-bulb depression	Wet-bulb temperature
White oak [2]	Red oak [2]			
Pct	Pct	°F	°F	°F
BASIS—AVERAGE MOISTURE CONTENT, ALL SAMPLES				
Above 42	Above 53	115	4	111
42	53	115	5	110
37	43	115	8	107
33	37	115	14	101
BASIS—AVERAGE MOISTURE CONTENT, WETTEST HALF OF SAMPLES				
35	35	120	35	85
30	30	125	40	85
27	27	130	45	85
21	21	140	50	90
17	17	180	50	130

[1] Accelerations achieved by presurfacing depend partly on 400 ft/min air velocity through the load.

[2] When there is a mixture of red and white oak in the kiln, operate on the basis of the moisture content of the samples of the predominating species. If either the red oak or the white oak is not strictly green, operate on the basis of the samples of the species closest to the green moisture content.

APPENDIX D—LUMBER NAMES, TREE SPECIES, SEASONING TYPES, AND BOTANICAL NAMES OF WOODS MENTIONED IN THIS HANDBOOK

Commercial name for lumber	Seasoning subtype	Official common tree name	Botanical name
		Apple	*Malus* spp
Ash:			
Black		Black ash	*Fraxinus nigra*
W bite		Blue ash	*F. quadrangulata*
		Green ash	*F. pennsylvanica*
		White ash	*F. americana*
Aspen (popple)		Bigtooth aspen	*Populus grandidentata*
		Quaking aspen	*P. tremdoides*
Basswood		American basswood	*Tilia americana*
		White basswood	*T. heterophylla*
Beech		Beech	*Fagus gvandifolia*
Birch:			
Soft (white)		Gray birch	*Betula populifolia*
		Paper birch	*B. papyrifera*
		River birch	*B. nigra*
Yellow		Sweet birch	*B. lenta*
		Yellow birch	*B. alleghaniensis*
Blackgum		(see Tupelo)	
Buckeye		Ohio buckeye	*Aesculus glabra*
		Yellow buckeye	*A. octandra*
Butternut		Butternut	*Juglans cinerea*
Cherry		Black cherry	*Prunus serotina*
Chestnut		Chestnut	*Castanea dentata*
Cottonwood	Normal	Balsam poplar	*Populus balsamifera*
	Wet streak	Eastern cottonwood	*P. deltoides*
		Swamp cottonwood	*P. heterophylla*
Cucumber		Cucumbertree	*Magnolia acuminata*
Dogwood		Flowering dogwood	*Cornus florida*
Elm:			
Rock		Cedar elm	*Ulmus crassifolia*
		Rock elm	*U. thomasii*
		September elm	*U. serotina*
		Winged elm	*U. alata*
Soft (American)	Hard type	American elm	*U. americana*
	Soft type (gray)	Slippery elm	*U. rubra*
Gum		(See sweetgum)	
Hackberry		Hackberry	*Celtis occidentals*
		Sugarberry	*C. laevigata*
Hickory		Mockernut hickory	*Carya tomentosa*
		Pignut hickory	*C. glabra*
		Shagbark hickory	*C. ovata*
		Shellbark hickory	*C. laciniosa*
Holly		American holly	*Ilex opaca*
Ironwood (hophornbeam)		Eastern hophornbeam	*Ostrya virginiana*
Locust		Black locust	*Robinia pseudoacacia*
		Honeylocust	*Gleditsia triacanthos*
Magnolia		Southern magnolia	*Magnolia grandifiora*
		Sweetbay	*M. virginiana*
		(Also see cucumbertree)	
Maple:			
Hard		Black maple	*Acer nigrum*
		Sugar maple	*A. saccharum*
soft		Red maple	*A. rubrum*
		Silver maple	*A. saccharinum*

Commercial name for lumber	Seasoning subtype	Official common tree name	Botanical name
Oak:			
Red	Northern or upland	Black oak	*Quercus velutina*
		Blackjack oak	*Q. marilandica*
		Cherrybark oak[1]	*Q. falcata* var. *pagodaefolia*
		Northern pin oak	*Q. ellipsoidalis*
		Northern red oak	*Q. rubra*
		Pin oak	*Q. palustris*
		Scarlet oak	*Q. coccinea*
		Shumard oak[1]	*Q. shumardii*
		Southern red oak	*Q. falcata* var. *falcata*
	Southern lowland	Cherrybark oak[2]	*Q. falcata* var. *pagodaefolia*
		Laurel oak	*Q. laurifolia*
		Nuttall oak	*Q. nuttallii*
		Shumard oak[2]	*Q. shumardii*
		Water oak	*Q. nigra*
		Willow oak	*Q. phellos*
White	Northern or upland	Bur oak	*Q. macrocarpa*
		Chestnut oak	*Q. primus*
		Chinkapin oak	*Q. mushlenbergii*
		Post oak	*Q. stellata*
		Swamp white oak	*Q. bicolor*
		White oak	*Q. alba*
	Southern lowland	Overcup oak	*Q. lyrata*
		Swamp chestnut oak	*Q. michanxii*
Osage-orange		Osage-orange	*Maclura pomifera*
Pecan:			
Sweet pecan		Pecan	*Carya illinoensis*
		Nutmeg hickory	*C. myristicaeformis*
Bitter pecan	Sapwood / Heartwood	Water hickory	*C. aquatica*
Persimmon		Common persimmon	*Diospyros virginiana*
Poplar		(See yellow-poplar)	
Sassafras		Sassafras	*Sassafras al bidum*
Sweetbay		Sweetbay	*Magnolia virginiana*
Sweetgum	Red gum	Sweetgum (heartwood)	*Liquidambar styraciflua*
	Sap gum[3]	Sweetgum (sapwood)	Do.
Sycamore		American sycamore	*Platanus occidentals*
Tupelo, black (black gum)		Black tupelo	*Nyssa sylvatica*
		Swamp tupelo	*N. sylvatica* var. *biflora*
Tupelo		Water tupelo	*N. aquatica*
Walnut		Black walnut	*Juglans nigra*
Willow		Black willow	*Salix nigra*
Yellow-poplar		Yellow-poplar	*Liriodendron tulipifera*

[1] When grown on upland sites.
[2] When grown on lowland (wetter) sites.
[3] If sap gum grade contains more than 15 pct heartwood, dry with red gum schedules.

GLOSSARY

Accelerated air drying. ––The use of equipment and procedures to accelerate air drying. In this handbook it includes yard fan drying, shed fan drying, forced air drying, low temperature kiln drying, and controlled air drying.

Active drying period. —In air drying, the period or season of the year when conditions are most favorable for drying the wood at the highest rate.

Air drying. —The process of drying green lumber or other wood products by exposure to prevailing natural atmospheric conditions outdoors or in an unheated shed.

Air drying calendar. A table showing the number of effective air drying days each month of the year in a specific area.

Air drying efficiency. Operation of the air drying process to reduce green wood to the air-dried moisture content level with least cost in energy, time, and money.

Effective air drying day (EADD). A day with drying potential equivalent to the average of all the days in full months of the late spring-summer season.

Good air drying month. Thirty consecutive days in which daily mean temperatures are over 45° F. This is roughly equivalent to 22 or more EADDS.

Alleys. —In air drying, the passageways between rows or lines of piles of lumber or other wood products on a yard.

Cross alley. The passageways that connect main alleys and lie at right angles to the piled lumber.

Main alley. The roads in a yard for the transport of lumber and other wood products.

Baffle. —In forced air or kiln drying, a canvas, metal, or wood barrier used for deflecting, checking, or otherwise directing the flow of air.

Blank. —A piece of wood cut to a specified size and shape from which a finished product or pattern is made, e.g., gunstocks, bowling pins.

Board. —Yard lumber that is less than 2 inches thick and 2 or more inches wide; a term usually applied to 1-inch thick stock of all widths and lengths.

Boiling in oil. —A special process for drying wood; the rough green wood products are submerged in an open hot bath of a water-repelling liquid such as petroleum oil, creosote, or molten wax, or perchloroethylene in ozeotropic drying, all of which have a boiling point considerably above that of water.

Bolster. ––A piece of wood, generally a nominal 4 inches in cross section, placed between stickered packages of lumber or other wood products to provide space for the entry and exit of the forks of a lift truck. (The bolster should be placed in alinement with a tier of stickers and a supporting foundation member.)

Bound water. ––In wood technology, moisture that is intimately associated with the finer wood elements of the cell wall by adsorption and held with sufficient force to reduce the vapor pressure.

Bow. —A form of warp in which a board deviates from flatness lengthwise but not across the faces.

British themal unit. —The amount of heat required to raise the temperature of 1 pound of water at its maximum density, 1° F.

Bulk piling. —In handling lumber and other wood items, the stacking onto dollies or pallets, into unit packages or into bins without vertical spaces or stickers between the layers for air circulation.

Casehardening. —A condition of stress and set in dry wood in which the outer fibers are under compressive stress and the inner fibers under tensile stress, the stresses persisting when the wood is uniformly dry.

Cell. —In wood anatomy, a general term for the minute units of wood structure having distinct cell walls and cell cavities including wood fibers, vessel segments, and other elements of diverse structure and function. In dense woods the fibers are thick walled and make up the major part of whole zones of wood. These fibrous zones are slow drying.

Cellulose. —The carbohydrate that is the principal constituent of wood and forms the framework of the wood cells.

Check. ––A separation of the wood fibers within or on a log, timber, lumber, or other wood product resulting from tension stresses set up during drying, usually the

early stages of drying. Surface checks occur on flat faces of boards; end checks on ends of logs, boards, or dimension parts.

Chemical seasoning. —The application of a hydroscopic chemical, (e.g., sodium chloride) to green wood, for the purpose of reducing defects, mainly surface checks, during drying. The chemical may be applied by soaking, dipping, spraying with aqueous solutions, or by spreading with the dry chemical and bulk piling.

Collapse. —Flattening or buckling of the wood cells during drying resulting in excessive or uneven shrinkage plus a corrugated surface.

Conditioning. ––In kiln drying, a process for relieving the stresses present in the wood at the end of drying. Consists of subjecting the stock while still in the kiln to a fairly high dry-bulb temperature and an equilibrium moisture content condition 3 to 4 percent above the desired average moisture content for the stock. The process should be of sufficient duration to eliminate casehardening through the reduction of compression and tension sets.

Course. —A single layer of lumber or other wood products of the same thickness in a stickered pile, package, or kiln truckload.

Crook. —A form of warp in which a board deviates edgewise from a straight line from end to end.

Cup. —A form of board warp in which there is a deviation from a straight line across the width.

Debarking. —Removing the bark from a log.

Debris. ––In air drying, rubbish such as broken stickers, fragments of boards, broken down foundations, dried weeds, etc., that restrict air movement. In kiln drying, broken stickers, fragments of wood, and other rubbish that interfere with air circulation and increase the fire hazard.

Decay. —The softening, weakening, or total decomposition of wood substance by fungi.

Defect. ––Any irregularity or imperfection in a tree, log, bolt, lumber, or other wood product that reduces the volume of useable wood or lowers its durability, strength, or utility value. Defects may result from knots and other growth conditions and abnormalities; from insect or fungus attack; from milling, drying, machining, or other processing procedures.

Degrade. —Generally, in lumber and other forest products, the result of any process that lowers their value for any purpose.

Drying degrade. A drop in lumber grade and volume due to drying defects.

Machine degrade. The downward change of grade or value of wood items due to defects developed during machining.

Density. ––The weight of wood per unit volume, usually expressed in pounds per cubic foot or grams per cubic centimeter. As changes in moisture content of wood affect its weight and volume, it is necessary to specify the conditions of wood at the time density is determined.

Depression, wet-bulb. ––The difference between the dry- and wet-bulb temperatures.

Desuperheater. —A device for removing from steam the heat beyond that required for saturation at a given pressure.

Diamonding. ––A form of warp; the changing of the cross section of a square-sawn wood item to diamond-shaped, during drying. This occurs where the growth rings pass through diagonal corners and is caused by the difference between tangential and radial shrinkage.

Diffusion. —Spontaneous movement of water through wood from points of high concentration to points of low concentration.

Diffusivity. ––The measure of rate of moisture movement through wood as a result of differences in moisture content.

Dimensional stabililization. —Through special treatment, reduction in the normal swelling and shrinking of wood.

Discoloration. ––Change in the color of wood due to fungal and chemical stains, weathering, or heat treatment.

Dryer. —Air moving and directing equipment used to accelerate the air drying of wood.

Controlled-air dryer. A warehouse-like building with overhead fans and layout designed for gentle recirculation of air through the lumber piles, having controlled vents and unit heaters to maintain a desired temperature and relative humidity.

Forced-air dryer. An inexpensive building with reversible fans, tight baffling, and a source of heat, providing high air velocity through the lumber piles, thermostatically controlled temperature in the range of 70°–120° F, and partial relative humid-

ity control by limited venting.

Low-temperature kiln. Similar to a forced-air dryer having sources of heat and humidity, providing high air velocity through the piles, and dry- and wet-bulb temperature control by a recorder-controller.

Semi-solar dryer. A low-temperature kiln in which part of the heat is from solar energy and part from an artificial heat source.

Shed-fan dryer. A shed with permanent roof, permanent or temporary end walls, and a permanent side wall with enough fans to draw yard air through the lumber piles at a high velocity.

Solar dryer. A forced-air dryer or low-temperature kiln in which only solar energy is used for heat.

Yard-fan dryer. Similar in operation to a shed-fan dryer, but roof and end walls are temporary and made of canvas, plywood, or sheet metal. Some such dryers have portable fans used to exhaust air from an enclosed central plenum space between two yard piles.

Dry kiln. —A room, chamber, or tunnel in which the temperature and relative humidity of air circulated through parcels of lumber, veneer, and other wood products can be controlled to govern drying conditions.

Dryer or kiln concepts. —Important ideas in wood drying technique.

Air travel. The distance air has to move from the entering-air side to the leaving-air side of the load.

Air velocity. The velocity of air as it leaves the sticker spaces on the leaving-air side of the load.

Entering-air side of load. Where the air enters the lumber pile when the fans are turning in a specific direction. The air on this side of the load must be controlled in accordance with the drying schedule to prevent drying defects.

Leaving-air side of the load. The side of the load from which the air is exhausted or returned to the heat source and fans. This air is always cooler and more humid than the entering air because of the cooling effect of moisture evaporating from the lumber.

Drying. —The process of removing moisture from wood to improve its serviceability in use.

Drying or kiln schedule. The prescribed schedule of dry-bulb temperature and wet-bulb temperature or relative humidity used in drying a load of lumber. The humidity aspect is sometimes expressed in terms of wet-bulb depression or EMC. In kiln drying, air velocity is an important aspect.

Drying rates. The loss of moisture from lumber or other wood products per unit of time. Generally expressed in percentage of moisture content lost per hour or per day.

Drying record. A daily or weekly tabulation of dryer or kiln operation including sample weight, MC, and temperature readings or recorder-controller charts.

Drying shed. In air drying, an unheated building for drying lumber and other wood products. The building of various designs may be open on all sides, or closed.

Drying stress. The force per unit area that occurs in some zones of drying wood due to uneven shrinkage in response to normal moisture gradients and to set that develops in wood.

Edge piling. ––In air drying, stacking of wood products on edge, e.g., 2 by 4's, so that the broad face of the item is vertical; usually done to restrain crook. In kiln drying, stacking of lumber on edge for drying in kilns with vertical air circulation.

End coating. ––A coating of moisture-resistant material applied to the end-grain surfaces of green wood such as logs, timbers, boards, squares, etc., to retard end drying and consequent checking and splitting or to prevent moisture loss from the ends of the drying samples.

End pile. ––In air drying, stacking of green lumber on end, and inclined, in a long fairly narrow row, the layers separated by stickers. In lumber storage, placement of wood items on end in suitable bins, a practice at mills and retail yards. In kiln drying, placing lumber on kiln trucks with their length parallel to the length of the kiln.

End racking. —In air drying, placing of boards on end against a support so as to form a pile

in the shape of an "X" or an inverted "V."

Equalization and conditioning. —In kiln drying, the process of increasing the equilibrium moisture content condition in the final stages of drying lumber and other mill products to—(1) reduce the moisture content range between boards, (2) flatten the moisture content gradient within boards, and (3) relieve drying stresses. Usually equalization and conditioning are two separate stages in final kiln drying.

Equilibrium moisture content. —The moisture content at which wood neither gains nor loses moisture when surrounded by air at a given relative humidity and temperature. EMC is frequently used to indicate potential of an atmosphere to bring wood to a specific MC during a drying operation.

Extractives. ––Substances in wood, not an integral part of the cellular structure, that can be removed by solution in hot or cold water, ether, benzene, or other solvents that do not react chemically with wood substances.

Fiber-saturation point. —The stage in the drying or wetting of wood at which the cell lalls are saturated with water (bound water) and the cell cavities are free of water. It is usually taken as approximately 30 percent moisture content, based on the weight when ovendry.

Flat pile. ––In air drying and kiln drying, stacking of stock so that the broad face of the item is horizontal. In kiln drying, the stickered loads are level.

Flue. —In stacking lumber or other wood products for air drying, a vertical space, 6 inches or less in width in the center of the pile and extending the length of the pile, intended to facilitate circulation of air within the pile.

Foundation. —Structural supports for an air-drying pile, designed to prevent warping and facilitate air circulation under the pile.

Free water. —In wood technology, water that is held in the lumens or the grosser capillary structure of the wood.

Fungi. —Low forms of plants consisting mostly of microscopic threads (hyphae) that traverse wood in all directions, dissolving materials out of the cell walls that they use for their own growth.

Grain. —The direction, size, arrangement, appearance, or quality of the fibers in lumber or other wood products. When used with qualifying adjectives, it has special meanings concerning the direction of the fibers or the direction or size of the growth rings.

Across the grain. The direction (or plane) at right angles to the length of the fibers and other longitudinal elements of the wood.

Along the grain. The direction (or plane) parallel to the length of the fibers and other longitudinal elements in the wood.

Cross grain. Wood in which the fibers deviate from a line parallel to the sides of the piece. Cross grain may be either diagonal or spiral grain or a combination of the two.

Edge grain. Wood that has been sawed or split so that the wide surfaces extend approximately at right angles to the annual growth rings. Lumber is considered edge-grained when the rings form an angle of 45° to 90° with the wide surface of the piece.

End grain. The ends of logs or timbers, dimension, boards, and other wood products that are cut perpendicular to the fiber direction.

Flat grain. Lumber or other wood products sawed or split in a plane approximately perpendicular to the radius of the log. Lumber is considered flat-grained when the annual growth rings make an angle of less than 45° with the surface of the piece.

Interlocked grain. Lumber or other wood products in which fibers are inclined in one direction in a number of rings of annual growth, then gradually reverse, and are inclined in an opposite direction in succeeding growth rings. This pattern is reversed repeatedly.

Raised grain. Lumber and other wood products in which a roughened condition of the surface after planing, particularly softwood, is due to either the earlywood or the latewood projecting above the general level of the surface.

Slope of grain. In lumber and other wood products, the degree of cross grain. It is the ratio between a 1-inch deviation of

the grain from the long axis of a piece and the distance along the edge within which this deviation occurs.

Straight grain. Wood in which the fibers and other longitudinal elements run parallel to the axis of a piece.

Green volume. —Cubic content of green wood.

Growth ring. —A layer of wood (as an annual ring) produced during a single period of growth.

Hardwoods. —Generally one of the botanical groups of trees that have broad leaves in contrast to the conifers or softwoods. The term has no reference to the actual hardness of the wood.

Heartwood. —The inner layer of a woody stem wholly composed of nonliving cells and usually differentiated from the outer enveloping layer (sapwood) by its darker color. It is usually more decay resistant than sapwood and more difficult to dry.

Heated room drying. —Drying air-dried wood in a room or small building, using just enough heat to raise the temperature slightly above outdoor air temperature and provide an EMC 2 percent below the desired final EMC. Mild air circulation promotes temperature uniformity.

High-frequency dielectric heating. ––The use of an electric field oscillating at frequencies of 1 to 30 million cycles per second to heat wood. The electric energy is applied to wood between metal plates as electrodes.

High-temperature drying. —In kiln drying wood, use of dry-bulb temperatures of 212° F. or more.

Honey combing. —In lumber and other wood products, separation of the fibers in the interior of the piece, usually along the wood rays. The failures often are not visible on the surfaces, although they can be the extensions of surface and end checks.

Humidity. —The moisture content of air.

Relative humidity. Under ordinary temperatures and pressures, it is) the ratio of the weight of water vapor in a given unit of air compared with the weight which the same unit of air is capable of containing when fully saturated at the same temperature. More generally, it is the ratio of the vapor pressure of water in a given space compared with the vapor pressure at saturation for the same dry-bulb temperature.

Hygroscopicity. —The property of a substance, such as wood, which permits it to absorb and lose moisture readily.

Hygrostat. —A device for automatically regulating the EMC of the air.

Hysteresis. —The tendency of dried wood exposed to any specified temperature and relative humidity conditions to reach equilibrium at a lower moisture content when absorbing moisture from a drier condition than when losing moisture from a wetter condition.

Infrared drying. —A special process in drying wood by direct radiation from high-intensity sources such as heat lamps and radiant gas burners.

Kiln. —A chamber or tunnel used for drying and conditioning lumber, veneer, and other lood products in which the temperature and relative humidity of the circulated air can be varied.

Conventional kiln. Such kilns use initial temperatures from 100° to 17W F and final temperatures from 150° to 200° F. Control of EMC is necessary to avoid shrinkage-associated defects and to equalize and condition the wood at the end of drying. Air velocities generally are between 200 and 450 feet per minute.

High temperature kiln. A kiln for drying lumber and other wood products operated at dry-bulb temperatures above 212° F.

Kiln charge. In kiln drying, the total amount of lumber or wood items to be dried in a dry kiln.

Kiln dried. Lumber or other wood items that were dried in a closed chamber in which temperature and relative humidity of the circulated air can be controlled.

Kiln leakage. The undesirable loss of heat and vapor from a kiln through and around doors and ventilators or through cracks in the walls and roof.

Kiln operator. In kiln drying, the supervisor or person responsible for the performance of dry kilns and related equipment.

Kiln run. The term applied to the drying of a single charge of lumber or other wood product.

Kiln sample. A length cut from a sample board and placed in the kiln charge so that it may be removed for examination,

weighing, or testing.

Kiln schedule. In kiln drying, the prescribed schedule of dry-bulb and wet-bulb temperatures used in drying a kiln charge of lumber or other wood products.

Low temperature kiln. Forced air drying in a moderately tight building equipped to produce air movement through the loads and recirculate the air over heat and/or humidity sources, with dry- and wet-bulb controls to maintain small to moderate wet-bulb depressions in the temperature ranges between 85° and 120° F.

Package-loaded kiln. A trackless compartment kiln for drying packages of stickered lumber or other wood products. The dryer usually has large doors that can be opened so that the kiln charge can be placed in or removed from the dryer by forklift trucks. It is usually a forced-air circulation kiln with fans mounted overhead or at the side.

Progressive kiln. A dry kiln in which the total charge of lumber is not dried as a single unit but as several units, such as kiln-truckloads that move progressively through the dryer. The kiln is designed so that the temperature is lower and the relative humidity higher at the entering end than at the discharge end.

Reversible circulation kiln. A dry kiln in which the direction of air circulation through the stickered loads of lumber or other wood products can be reversed at desired intervals.

Track-loaded kiln. A kiln, with doors at one or both ends, for which loads are built up on kiln trucks outside the kiln and moved in and out of the kiln on tracks.

Knot. —That portion of a branch or limb that has been surrounded by subsequent growth of the wood of the trunk or other portions of the tree. As a knot appears on the sawed surface, it is merely a section of the entire knot, its shape depending upon the direction of the cut.

Layout. —On an air-drying yard, layout refers to arrangement and orientation of alleys, row and line spacings, pile sizes and spacings, and foundation placement.

Losses, drying. —In drying lumber and other wood products, the reduction in volume and grade quality that can be attributed to the drying process.

Lumber. —The product of the sawmill and planing mill not further manufactured than by sawing, resawing, passing lengthwise through a standard planing machine, cross cutting to length, and mat thing.

Boards. Yard lumber less than 2 inches thick and 1 or more inches wide.

Common lumber. A classification of medium and low-grade hardwood lumber and/or softwood lumber suitable for general construction and manufacturing but not suitable for finish grade.

Dimension lumber. As applied to hardwood lumber, a term loosely used but generally referring to small squares or pieces of rectangular cross section used for furniture and like purposes (small dimension).

Dressed lumber. The dimensions of lumber after drying and surfacing with a planing machine.

Finish lumber. A collective term for upper grades of lumber suitable for natural or stained finishes.

Flooring lumber. Generally, a grade of either hardwood or softwood boards that have been found to produce maximum quantity of flooring of the desired quality.

Nominal size. As applied to timber or lumber, the size other than the actual size, by which it is known and sold in the market.

Rough lumber. Lumber as it comes from the saw.

Structural lumber. Lumber that is nominally 2 or more inches thick and nominally 4 or more inches wide, intended for use where working stresses are required. The grading of structural lumber is based on the strength of the piece and the use of the entire piece, e.g., stud, joist, beam, plank, girder, rafters, framing, etc.

Yard lumber. Lumber of all sizes and patterns that is intended for general building purposes, The grading of yard lumber is based on the intended use of the particular grade and is applied to each piece with reference to its size and length when graded, without consideration to further manufacture.

Lumen. —In wood anatomy, the cell cavity.

Microwave heating. —Heating a material

using electromagnetic energy alternating at a frequency from 915 megahertz to 22,125 megahertz.

Mineral streak. —An olive to greenish-black or brown discoloration in hardwoods, particularly hard maples, due to wound-induced bacterial, chemical, or fungal action. Narrow streaks often contain accumulations of mineral matter.

Moisture content. —The amount of water contained in the wood, usually expressed as a percentage of the weight of the ovendry wood.

Average moisture content. The moisture content, in percent, of a single section representative of a larger piece of wood or the average of all the moisture content determinations made on a board or other wood item or of a number of determinations made on a lot of lumber or other wood products.

Final moisture content. The average moisture content of the lumber or other wood product at the end of the drying process.

Initial moisture content. The moisture content of the wood at the start of the drying process.

In-use moisture content. The moisture content that wood items attain in the environmental conditions of usage.

Range. The difference in moisture content between the driest and wettest boards in a shipment, lot, kiln charge, etc., or between representative samples of the lot.

Moisture gradient. In lumber drying, the distribution in moisture content within the wood. During drying, the differences are between the low moisture content of the relatively dry surface layers and the higher moisture content at the center of the piece.

Moisture content classes.-

Air dried. Wood having an average moisture content of 25 percent or lower, with no material over 30 percent.

Green. Freshly sawed wood or wood that essentially has received no formal drying.

Kiln dried. Dried in a kiln or by some other refined method to an average MC specified or understood to be suitable for a certain use, such an average generally being 10 percent or below for hardwoods. Kiln-dried lumber can be specified to be free of drying stresses.

Partly air dried. Wood with an average MC between 25 and 45 percent, with no material over 50 percent.

Shipping dry. Lumber partially dried to prevent stain or mold in brief periods of transit, preferably with the outer $^{1}/_{8}$ inch dried to 25 percent MC or below.

Moisture meter. —An instrument used for rapid determination of the moisture content of wood by electrical means.

Moisture movement. —The transfer of moisture from one point to another within wood or other materials.

Mold. —A fungus growth on lumber or other wood products at or near the surface and, therefore, not typically resulting in deep discolorations. Mold is usually ash green to deep green in color, although black and yellow are common.

Movement. —The alternate swelling and shrinkage that occurs in dried wood due to moisture content changes caused by variations in the surrounding atmospheric conditions.

Out-of-round. —A form or warp, the elliptical shape assumed by turned circular green wood items upon drying due to the difference in tangential and radial shrinkage.

Overhang. —The ends of boards that are unsupported by stickers and extend beyond the ends of most boards in an air drying pile, kiln truckload, or unit handling package.

Ovendry. —A term used to describe wood that has been dried in a ventilated oven at 212° to 221° F. (100 to 105° C) until there was no further significant loss in weight.

Ovendry weight. —Weight of wood when all the water has been driven off by heating in an oven at 212 to 221° F. (100 to 105° C).

Ovendrying. —Drying wood specimens to constant weight in an oven maintained at 212° to 221° F. (100 to 105° C).

Part-time drying. —In kiln drying, discontinuous operation of the dry kilns, usually necessitated by an interrupted steam, fuel, or power supply.

Permeability. —The ease with which a fluid flows through a porous material (wood) in response to pressure.

Pile. —In air drying, stacking lumber layer by

layer, separated by stickers or self snickering, on a supporting foundation (hand stacked). Also, stickered unit packages by lift truck or crane, one above the other on a foundation and separated by bolsters.

Box pile. A method of flat stacking random-length lumber for air drying or kiln drying. Full-length boards are placed in the outer edges of each layer and shorter boards in between are alternated lengthwise to produce square-end piles, unit packages, or kiln truckloads.

Crib pile. Stacking lumber to form a hollow triangle with their faces in contact at the corners.

Hand-stacked pile. Lumber and other wood products stacked by hand, course by course, on suitable foundations to build the pile.

Machine-stacked pile. Unit packages of stickered lumber or other wood products stacked by mechanical means onto a pile foundation and one above another to build a pile of packages.

Open pile. Spacing the boards or other rough-sawn wood products in stickered layers and in wide piles or packages incorporating flues in addition to board spacing.

Pile roof. A cover on top of the pile to protect the upper layers from exposure to the degrading influences of sun, rain, and snow. The sides and ends of the roof may project beyond the pile to provide added protection.

Pile spacing. The distance between individual piles in the row.

Random-length pile. Stacking lumber of various lengths in the same pile or package. The pile or package is usually square at one end with the long length at the other end unsupported by stickers.

Self-stickered pile. Stacking in which the stock is used as stickers to separate the layers. In crib stacking, the boards are in contact at the three corners. In level or sloped stacking of softwood boards and dimension, stock is used for stickers and the pile width is the same as the length. Hardwood dimension stock and railroad ties are often self stickered.

Pit. —In wood anatomy, a recess in the secondary wall of a cell where a thin membrane may permit liquids to pass from one cell to another.

Pitch. —The mixture of rosin and turpentine or other volatiles produced in the rosin canals of pines and other conifers.

Predryng. —A wood drying process carried out in special equipment before kiln drying.

Predryng treatments. —Special measures before or early in drying to accelerate drying rate, to modify color, or to prevent checks and other drying defects.

Blanking. Surfacing one face of a rough-sawed board to achieve uniform thickness and reduce warping.

Chemical. Impregnating the outer zone of green lumber with hydroscopic and sometimes bulking chemicals to about one-tenth the thickness to reduce surface checking during drying. Involves control of relative humidity at a value below the RH that is in equilibrium with the saturated chemical solution.

Polyethylene glycol. Deeply impregnating green lumber with polyethylene glycol 1000 (PEG) to retain the green dimension during drying and indefinitely thereafter, minimizing shrinkage, swelling, and warp.

Precompression. Momentarily compressing green lumber transversely about 7.5% to permit drying by a severe schedule and improve drying behavior.

Prefreezing. The freezing and subsequent thawing of green wood before drying to increase drying rate and decrease shrinkage and seasoning defects.

Presurfacing. Surfacing both broad faces of green rough-sawed boards to permit drying by a schedule more severe than the prescribed schedule for rough lumber, achieving faster drying and fewer drying defects.

Steaming. Subjecting green wood to saturated steam at or close to 212° F to accelerate drying, achieve a desirable color, or both.

Surface treatment. Applying a salt or sodium alginate paste to the surface of green wood to help prevent checking as the wood is dried by other means.

Press drying. —The application of heat to opposite faces of a board by heated platens to evaporate moisture from the board, using

temperatures between 250° and 450° F and platen pressures between 25 and 75 pounds per square inch.

Radial surface. —A longitudinal surface or plane extending wholly or in part from the pith to the bark.

Recorder-controller. —An instrument that continuously records dry- and wet-bulb temperatures of circulated air and regulates these temperatures in a dryer or kiln by activating automatic heat and steam spray valves.

Redry. —In kiln or veneer drying, a process whereby dried material found to be at a moisture content level higher than desired is returned to the dryer for additional drying.

Refractory. —In wood, implies difficulty in processing or manufacturing by ordinary methods; resistance to the penetration of preservatives, difficulty in drying, or difficulty in working.

Ring failure. —A separation of wood along the grain and parallel to the annual rings, either within or between the rings.

Rot.—

Brown rot. In wood, any decay that concentrates on attacking the cellulose rather than lignin, producing a light to dark brown friable residue.

Dry rot. A term loosely applied to any dry, crumbly rot but especially to that which, when in an advanced stage, permits the wood to be crushed easily to a dry powder. The term is actually a misnomer for any decay, since all fungi require considerable moisture for growth.

White rot. In wood, any decay attacking both the cellulose and lignin, producing a generally whitish residue that may be spongy or stringy or occur in pockets.

Rounds. —Pieces of green wood dried in the form of cylinders. For example, ash baseball bat stock is often kiln dried as rough turned rounds rather than squares.

Sap. —The moisture in green wood, containing nutrients and other chemicals in solution.

Sapwood. —In wood anatomy, the outer layers of the stem that in the living tree contain living cells and reserve materials, e.g., starch. The sapwood is generally lighter in color than the heartwood.

Season. —To dry lumber and other wood items to the desired final moisture content and stress condition for its intended use.

Set. —A semipermanent deformation in wood caused by tensile and compressive stresses during drying.

Compression set. Set, occurring during compression, that tends to give the wood a smaller than normal dimension after drying, usually found in the interior of wood items during the later stages of drying but sometimes in the outer layers after extended conditioning or rewetting. Also caused by external restraint during rewetting of dried wood.

Tension set. Set, occurring during tension, that tends to give wood a larger than normal dimension after drying; usually occurring in the outer layers during the early stages of drying.

Shrinkage. —The contraction of wood fibers caused by drying below the fiber saturation point. Shrinkage—radial, tangential and volumetric—is usually expressed as a percentage of the dimension of the wood when green.

Longitudinal shrinkage. Shrinkage of wood along the grain.

Radial shrinkage. Shrinkage across the grain, in a radial-transverse direction.

Tangential shrinkage. Shrinkage across the grain, in a tangential-transverse direction.

Volumetric shrinkage. Shrinkage of wood in volume.

Sinker. —A log which sinks in water.

Sinker stock. —Lumber or other sawmill products sawed from sinker logs. The green moisture content is very high and the drying rate can be low.

Softwood. —Generally, one of the botanical groups of trees that, in most cases, have needlelike or scalelike leaves; the conifers; also, the wood produced by such trees. The term has no reference to the actual hardness of the wood.

Spacing.—

Board spacing. The spacing of boards or other rough-sawn wood products, in a course of a pile, kiln truckload, or stickered unit package.

Pile spacing. Spacing between the piles in the row or line of piles in the yard.

Row spacing. Spaces between rows of piles in the yard.

Sticker spacing. Distance between adjacent stickers in a pile, kiln truckload, or a stickered unit package of lumber.

Species. —A group of individual plants of a particular kind; that is, a group of individuals sharing many of the same characteristics. It is a category of classification lower than the genus but higher than the variety.

Specific gravity. ––In wood technology, the ratio of the ovendry weight of a piece of wood to the weight of a volume of water at 4° C. (39° F.), equal to the volume of the wood sample. Specific gravity of wood is usually based on the green volume and ovendry weight.

Stacking. ––Constructing packages, piles, or kiln truck loads of lumber whose courses or layers are separated by stickers to facilitate drying the lumber.

Stain. —A discoloration in wood that may be caused by micro-organisms, metal or chemicals. The term also applies to materials used to impart colors to wood.

Blue. A bluish or grayish discoloration in the sapwood caused by the growth of certain dark-colored fungi.

Chemical. A general term including all stains that are due to color changes of the chemicals normally present in the wood.

Iron-tannate. A surface stain, bluish-black in color, on oak and other tannin-bearing woods following contact of the wet wood with iron, or with water in which iron is dissolved.

Sticker. —A wooden strip, or its substitute, placed between courses of lumber or other wood products, in a pile, unit packages or kiln truckload, at right angles to the long axis of the stock, to permit air to circulate between the layers.

Dry sticker. A sticker that has been made from lumber that was dried prior to sticker manufacture.

Green sticker. A sticker cut from green lumber or made by processing slabs and edgings into stickers.

Sticker marking. Indentation or compression of the lumber or other wood product by the sticker when the superimposed load is too great for the sticker bearing area. Also, sometimes light areas under the sticker as the rest of the board browns.

Sticker alinement. The placing of stickers in a pile, unit package, or kiln truckload of lumber or other wood products so that they form vertical tiers.

Stock stickers. In air drying lumber, use of boards being piled (hand-stacked) as stickers. Usually restricted to softwoods being air dried in semi-arid and arid regions.

Storage. —Bulk or stickered piling of air- or kiln-dried wood products with protection from the weather in accordance with the desired level of moisture content; protection might be tarpaulins, or open, closed, or closed and heated sheds.

Sun shields. ––In air drying, plywood panels, boards, or some other type of shield placed to protect the ends of piles from direct sun. The purpose is to retard end drying, thus minimize end-checking and end-splitting.

Swelling. —Increase in the dimensions of wood due to increased moisture content. Swelling occurs tangentially, radially, and to a lesser extent, longitudinally.

Tangential surface. —Surface tangent to the growth rings; a tangential section is a longitudinal section through a log perpendicular to a radius. Flat-grained lumber is sawed tangentially.

Temperature. —May be defined as the condition of a body which determines the transfer of heat to or from other bodies; it is a measure of the thermal potential of a body.

Dry-bulb temperature. Temperature of air in a yard or drying apparatus indicated by any temperature-measuring device with its sensitive element or bulb uncovered.

Mean monthly temperature. In air drying, the average dry-bulb temperature over a period of a month. Usually obtained from Weather Service records.

Wet-bulb temperature. The temperature indicated by any temperature-measuring device the sensitive element of which is covered by a water-saturated cloth (wet-bulb wick).

Tension failure. ––The pulling apart or rupturing of wood fibers, as a result of tensile stresses.

Tension wood. ––In wood anatomy, reaction

wood formed typically on the upper sides of branches and leaning hardwood trees, and characterized anatomically by little or no signification and by the presence of an internal gelatinous layer in the fibers. It has an abnormally high longitudinal shrinkage. The machined surface tends to be fibrous or woolly, especially when green.

Tier. —In air drying or kiln drying, a stack of packages of lumber or other wood products in vertical alinement. Also refers to sticker alinement from layer to layer.

Transverse. —The directions in wood at right angles to the wood fibers or across the grain. A transverse section is a section through a tree or timber at right angles to the pith.

Unit package. —Lumber or other wood products that have been assembled into a parcel for handling by a crane, carrier, or forklift truck.

Vapor barrier. —In kiln drying, a material with a high resistance to vapor movement that is applied to dry kiln surfaces to prevent moisture migration.

Vapor drying. —Drying wood by subjecting it to the hot vapors produced by boiling an organic chemical such as xylene.

Veneer. —A thin layer or sheet of wood produced on a lathe, slicer, or saw and is commonly referred to as rotary, sliced, or sawed veneer.

Vent. —In kiln drying, an opening in the kiln roof or wall that can be opened and closed to control the wet-bulb temperature within the kiln.

Volume, green. —The volume of wood determined from measurements made while the wood moisture content is above the fiber saturation point (i.e., above 30 pct moisture content; the green state).

Wane. —Bark, or the lack of wood from any cause, on any edge of a piece of square-edged lumber.

Warp. —Distortion in lumber and other wood products causing departure from its original plane, usually developed during drying. Warp includes cup, bow, crook, twist, out-of-round, kinks, and diamonding, or any combination thereof.

Warp restraint. —In drying lumber and other wood products the application of external loads to a pile, package, or kiln truckload of products to prevent or reduce warp.

Weight of wood. —The weight of wood depends on its specific gravity and its moisture content. Weight includes the ovendry wood and the moisture it holds. It is expressed as pounds per cubic foot at a certain moisture content or weight per 1,000 board feet at a specified moisture content.

Wetwood. —Wood with abnormally high water content and a translucent or water-soaked appearance. This condition develops only in living trees and does not originate through soaking logs or lumber in water.

Wood. —The tissues of the stem, branches, and roots of a woody plant lying between the pith and cambium, serving for water conduction, mechanical strength, and food storage, and characterized by the presence of tracheids or vessels.

Diffuse-porous wood. Wood in which the pores are of fairly uniform or of only gradually changing size and distribution throughout the annual growth ring.

Nonporous wood. Wood devoid of pores or vessels; characteristic of conifers.

Porous wood. Wood with vessels; typical of hardwoods as opposed to conifers.

Reaction wood. Wood with more or less distinctive anatomical characteristics, formed in parts of leaning or crooked stems and in branches. In hardwoods this consists of tension wood and in conifers of compression wood.

Residue. In the woodworking industry, that portion of the wood developed as bark, slabs, edgings, trim, sawdust, and shavings.

Ring-porous wood. Wood in which the pores of the earlywood are distinctly larger than those of the latewood and form a well-defined zone or ring.

☆ U.S. GOVERNMENT PRINTING OFFICE: 1978 O—258—680