RELATIONSHIPS AMONG GROWTH RATE, VESSEL LUMEN AREA, AND WOOD PERMEABILITY FOR THREE CENTRAL HARDWOOD SPECIES

PETER Y.S. CHEN†
GUOQIANG ZHANG
J.W. VAN SAMBEEK

ABSTRACT

The goal of most silvicultural practices is to increase tree height and diameter growth. However, very little is known about the effect of different growth rates on hardwood permeability. A thorough understanding of wood permeability is essential for proper wood drying and treatment. Twelve trees of the same age were cut and divided into three diameter growth classes of four trees each for northern red oak, black walnut, and yellow-poplar. Vessel lumen area and the longitudinal and radial permeabilities of the sapwood of each species were measured to evaluate the effect of diameter growth rate on vessel lumen area percentage and on the intrinsic permeability. The longitudinal permeability of the outer heartwood of each species also was determined to evaluate the effect of growth rate on the decrease in longitudinal permeability following sapwood conversion to heartwood. Faster diameter growth produced higher longitudinal permeability in the sapwood of yellow-poplar, but not in the sapwood of northern red oak or black walnut. Growth rate had no effect on either vessel lumen area percentage or decrease in longitudinal permeability in newly formed heartwood for all three species.

The goal of silvicultural practices such as thinning, interplanting, weeding, and fertilizing is to increase tree height and diameter growth (2,4,7-8). However, little is known about the effect of silvicultural practices on hardwood permeability, i.e., the measured flow of liquids through wood in response to an applied pressure gradient. An understanding of wood permeability is essential for determining lumber drying schedules for treating lumber and for producing high-quality wood products.

We conducted a study to determine the influences, if any, of diameter growth rate on vessel lumen area percentage and the intrinsic (sapwood) longitudinal and radial permeabilities of three representative central hardwood species: 1) northern red oak (*Quercus rubra* L.), a ring-porous wood; 2) black walnut (*Juglans nigra* L.), a semi-ring-porous wood; and 3) yellow-poplar (*Liriodendron tulipifera* L.), a diffuse-porous wood. Our secondary purpose was to determine the effect of growth rate on the decrease in longitudinal permeability of the newly formed heartwood of these three species.

MATERIALS AND METHODS

GROWTH RATE DETERMINATION

For this study, we selected 12 trees of each species representing the range of stem diameters from managed, even-aged plantations in southern Illinois. The northern red oak and yellow-poplar stands were 45 years old. Diameter growth differences were probably due to tree-to-tree competition. The black walnut stand was only 13 years old. Diameter growth differences among black walnut trees were in response to different legume ground covers (8). For northern red oak and yellow-poplar, an 18-inch-long bolt was extracted 8 feet above the ground from each tree. For black walnut, an 18-inch-long bolt was extracted 6 inches above the ground. All sample bolts were immediately end-coated and frozen until studied further.

One 2-inch-thick cross-sectional disc was cut from one end of each bolt to determine the growth rate of each tree. The longest and shortest diameters of each disc were measured, and the average diameter was determined. The 12 trees of each species were divided into

The authors are, respectively, Research Forest Products Technologist (retired), USDA Forest Serv., North Central Forest Expt. Sta., SIU Mailcode 4411, Carbondale, IL 62901; Former Research Assistant, Dept. of Forestry, SIU Mailcode 4411, Southern Illinois Univ., Carbondale, IL 62901; and Research Plant Physiologist, North Central Forest Expt. Sta., 1-26 Agriculture Bldg., Univ. of Missouri, Columbia, MO 65211. This paper was received for publication in July 1994. Reprint No. 8211.
† Forest Products Society Member.
©Forest Products Society 1998.
Forest Prod. J. 48(3):87-90.

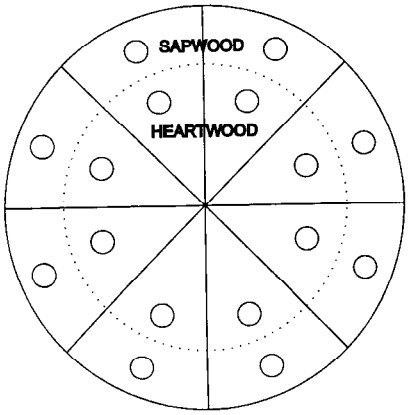

Figure 1. — Sampling scheme for longitudinal permeability plugs.

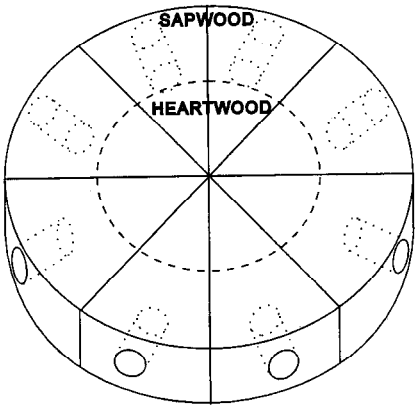

Figure 2. — Sampling scheme for radial permeability plugs.

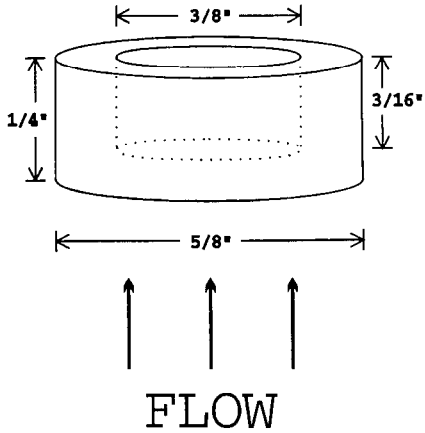

Figure 3. — Radial permeability plugs for northern red oak and black walnut.

three diameter growth classes (slow, average, and fast) of four trees each based on average tree diameter.

WOOD SAMPLE PREPARATION

To determine the effect of diameter growth rate on the intrinsic permeability of each tree, we extracted eight longitudinal and eight radial permeability plugs from the outer sapwood **(Figs. 1** and **2).** Another eight longitudinal permeability plugs were extracted from the newly formed heartwood to determine the influence of growth rate on the decrease in longitudinal permeability following conversion of sapwood to heartwood **(Fig. 1).** Longitudinal permeability plugs were 3/8 inch in diameter and 1/2 inch in length (flow direction). Radial permeability plugs were 5/8 inch in diameter and 1/4 inch in length (flow direction). We were unable to measure any meaningful flow through the 1/4-inch-long radial permeability plugs of northern red oak and black walnut for 4 minutes under the maximum permissible safe pressure of 40 psi of the permeability measuring apparatus (1). So, we further machined these plugs to produce an inner hole of 3/8 inch in diameter and 3/16 inch deep **(Fig. 3).** This, in effect, reduced the radial permeability plugs for northern red oak and black walnut to 3/8 inch in diameter and 1/16 inch in length (flow direction). We did not measure and analyze the radial permeability of heartwood of any of the three hardwoods because of the difficulty in measuring any meaningful water flow in the radial direction through the sapwood.

PERMEABILITY MEASUREMENTS

Chen and Tang (1) previously described the permeability measuring apparatus used in this study and the detailed procedure for measuring longitudinal permeability of wood with deaerated distilled water. Briefly, distilled, deaerated water was used to measure flow through the wood sample plugs. Before use, the distilled water was evacuated under a vacuum of 28 inches of mercury for 1.5 hours. The oxygen content of the permeating distilled water was reduced by nearly 75 percent from 8.85 ppm to 2.35 ppm at 70°F room temperature. We had to deaerate the permeating water to avoid or reduce the occurrence of air blockage inside the wood specimen, which made it possible to maintain a relatively constant flow rate during the measurement period (3). Some modifications were made for measuring flow rates in radial permeability plugs. Due to the relatively small flow rates encountered in measuring radial samples, a timer and a small graduated glass pipet were used to determine the flow rates of all radial samples.

DETERMINATION OF VESSEL LUMEN AREA

After measuring permeabilities, we randomly selected four of the eight longitudinal sapwood plugs from each tree of each species to determine vessel lumen area percentages. The detailed procedure, chemicals, and instruments used to cook, slice, dehydrate, stain, mount, and microscopically measure vessel lumen area percentages were reported previously (6). Briefly, cross sections, 20 microns thick, were sliced from the sample plug, mounted on glass slides with ethyl alcohol miscible Euparal, and stained with safranin-fast green. Vessel lumen area was measured using a Delta-T area meter attached to a Carl Zeiss Universal microscope. Five continuous, non-overlapping readings (at 4 × magnification) were required to cover the entire diameter of the cross section of each sample plug of northern red oak and black walnut. Due to the smaller vessel size of yellow-poplar, 10 continuous, non-overlapping readings (at 10 × magnification) were needed to cover the entire diameter of the cross section of that species.

DATA ANALYSIS

To determine the influence of growth rate, separate nested sampling ANOVAs were performed on vessel lumen area percentages, on longitudinal permeability values of sapwood and heartwood, and radial permeability values of sapwood for each species.

RESULTS AND DISCUSSION

CONSTANT FLOW RATE

Constant flow rate is the most important prerequisite in measuring wood permeability, for without constant flow rate, we cannot determine the intrinsic permeability of wood (1). A constant flow rate for 2 minutes or longer was maintained on 82 percent of the longitudinal sapwood specimens and 58 percent of the longitudinal heartwood specimens of northern red oak, black walnut, and yellow-poplar. This compares to 77 and 42 percent of sapwood and heartwood, respectively, in a previous study (1). Apparently, the additional one-half hour of vigorous deaeration of the permeating water under high vacuum in our latest

TABLE 1.—Analyses of variance (nested design) for permeabilities and vessel areas of northern red oak, black walnut, and yellow-popar.

			Permeability								
			Long.-sapwood		Long.-sapwood		Radial-sapwood		Vessel lumen area		
Species	Source[a]	df[b]	MS[c]	F-value[d]	MS	F-value	MS	F-value	df	MS	F-value
Northern red oak	DC	2	9.03	0.12[NS]	0.0133	1.73[NS]	4029.07	2.14[NS]	2	119.24	0.29[NS]
	T(DC)	9	484.51	12.20**	0.0077	4.25**	1881.82	15.24**	9	407.69	7.30**
	P(T)	84	39.72	- -	0.0018	- -	123.45	- -	36	55.86	3.08**
	R(P)								192	18.16	- -
Black walnut	DC	2	308.59	0.78[NS]	0.000008	0.28[NS]	168.91	1.40[NS]	2	328.18	2.49[NS]
	T(DC)	9	393.43	26.63**	0.000029	3.74**	120.27	5.47**	9	131.62	8.09**
	P(T)	84	14.77	- -	0.000008	- -	22.00	- -	36	16.26	3.37**
	R(P)								192	4.83	- -
Yellow-poplar	DC	2	1137.68	5.27*	0.0759	0.14[NS]	163,162	1.18[NS]	2	119.62	0.26[NS]
	T(DC)	9	215.85	41.75**	0.5476	16.83**	138,600	3.23**	9	458.29	4.63**
	P(T)	84	5.17	- -	0.0325	- -	42,910	- -	36	98.97	14.35**
	R(P)								432	6.90	- -

[a] DC = diameter growth class; T(DC) = trees within diameter growth class; P(T) = plugs within a tree; R(P) = readings within a plug
[b] df = degrees of freedom.
[c] MS = mean sum of squares.
[d] NS = not significant; * = significant at 5 percent level; ** = significant at 1 percent level.

study improved the percentage of specimens maintaining a constant flow rate for 2 minutes or longer. Most of the specimens without a constant flow rate showed a slight decreasing rate of flow, while approximately 6 percent of them showed a slight increasing rate of flow after 2 minutes. In this study, 54 percent of the radial sapwood specimens of black walnut and yellow-poplar maintained a constant flow rate for 4 minutes or longer. The remaining specimens showed mostly a slight decreasing flow rate over the 4-minute test period.

EFFECT ON VESSEL LUMEN AREA

Statistically, diameter growth rate had no effect on vessel lumen area percentages of northern red oak, black walnut, or yellow-poplar; however, there were significant tree-to-tree differences within diameter-growth classes **(Table 1).** Because the mean sum of squares for trees within a diameter class was statistically significant, the use of this term as the error mean sum of squares for computing the F-value for differences among diameter growth classes in a nested sampling ANOVA is questionable. We believe the great variability in vessel lumen area percentages among the four trees within each diameter class masked any differences due to diameter growth rate. The results indicate that more trees per diameter class should have been sampled or we should have used a different experimental design.

TABLE2.—Mean stem diameters and vessel lumen area percentages for the three diameter growth classes of northern red oak, black walnut, and yellow-poplar.

Species	Diameter growth class	Mean stem diameter	Vessel lumen area
		(cm)	(%)
Northern red oak	Slow	20.07 ± 0.85[a]	24.15 ± 1.17[b]
	Average	24.32 ± 1.75	22.41 ± 0.45
	Fast	26.26 ± 0.88	21.80 ± 1.22
Black wanut	Slow	10.15 ± 0.95	14.68 ± 0.53
	Average	13.40 ± 0.27	12.13 ± 0.65
	Fast	16.00 ± 1.10	10.68 ± 0.53
Yellow-poplar	Slow	18.57 ± 2.95	27.64 ± 0.66
	Average	25.78 ± 1.02	29.33 ± 0.43
	Fast	30.10 ± 1.25	28.19 ± 0.50

[a] Values are means from four trees ± one standard error.
[b] Values are means from four sample plugs taken from four trees ± one standard error.

Northern red oak (a ring-porous wood) and black walnut (a semi-ring-porous wood) both showed a decreasing trend in vessel lumen area with increasing growth rate, while yellow-poplar (a diffuse-porous wood) generally showed an increasing trend in vessel lumen area with increasing growth rate **(Table 2).** This indicates that a faster growth rate might mean more latewood growth for northern red oak and black walnut. Zhang and Zhong (9) found that a faster growth rate increased wood specific gravity in East-Liaoning oak (*Quercus liaotungensis*) and that wood specific gravity increased rapidly with increasing percent latewood. Phelps and Workman (6) also showed that a faster growth rate increased mostly latewood growth in black walnut. Increased latewood growth means decreased vessel lumen area for northern red oak and black walnut because there are very few vessels (even small ones) in the latewood of these two species (5).

EFFECT ON SAPWOOD PERMEABILITY

Faster diameter growth did result in an increase in intrinsic longitudinal permeability in the sapwood of yellow-poplar **(Table 3).** Diameter growth rate had no effect on the intrinsic permeability (longitudinal and radial) of northern red oak and black walnut, or on the intrinsic radial permeability of yellow-poplar **(Table 4).** We thought the main reason for the lack of differences was the great variability in permeability among the four trees within each diameter growth class, which masked the possibility of detect-

TABLE 3.—Mean longitudinal permeabilities for sapwood and the newly formed heartwood and the reduction in longitudinal permeability in newly formed heartwood of northern red oak, black walnut, and yellow-poplar.

Species	Diameter growth class	Longitudinal permeability		Reduction in permeability
		Sapwood	Heartwood	
		(darcys)	(millidarcys)	(%)
Northern red oak	Slow	60.78 ± 2.50[a]	46,200 ± 4,700[a]	27
	Average	59.42 ± 2.98	33,500 ± 7,500	44
	Fast	62.14 ± 2.75	55,800 ± 3,125	10
Black walnut	Slow	28.71 ± 1.29	4.26 ± 0.98	> 99
	Average	28.57 ± 3.09	7.77 ± 2.13	> 99
	Fast	23.26 ± 2.69	3.44 ± 0.38	> 99
Yellow-poplar	Slow	19.10 ± 2.83	89.26 ± 20.38	> 99
	Average	29.37 ± 1.08	183.02 ± 77.71	> 99
	Fast	29.49 ± 0.98	42.85 ± 6.55	> 99

[a] Values are means from five to eight sample plugs from each of four trees ± one standard error.

TABLE 4.—Mean radial permeabilities (millidarcys) for sapwood of northern red oak, black walnut, and yellow-poplar:

Species	Diameter growth class		
	Slow	Average	Fast
	(millidarcys)		
Northern red oak	0.088 ± 0.016[a]	0.047 ± 0.004	0.068 ± 0.008
Black walnut	0.008 ± 0.001	0.007 ± 0.000	0.008 ± 0.001
Yellow-poplar	0.493 ± 0.143	0.397 ± 0.042	0.459 ± 0.060

[a] Values are means from four to eight sample plugs from each of four trees + one standard error.

ing the effects of different diameter growth rates. This implies that more trees per diameter class should have been sampled, and that other factors, such as genetics and injury, may have an effect on wood permeability.

The largest difference in longitudinal permeability occurred between the slow and average diameter growth rates of yellow-poplar **(Table 3).** This coincides with the largest difference in average tree diameter between the slow and average diameter growth rate classes of yellow-poplar **(Table 1).** The trend of increasing longitudinal permeability with increasing diameter growth rate fits only loosely with the trend of an increasing vessel lumen area percentage with increasing diameter growth rate for yellow-poplar **(Table 2** and **3).**

Vessel lumen area was thought to be one of the most important factors controlling the longitudinal flow rate for hardwoods. Our results indicate that other factors also affect the longitudinal sapwood permeability of northern red oak, black walnut, and yellow-poplar. These factors might include the diameter of the vessel lumen and the type of perforation plates between vessel elements. We found the largest vessels of yellow-poplar were 150 microns in diameter, while the largest vessels for northern red oak could be more than 300 microns in diameter. In addition, northern red oak and black walnut have a simple perforation plate between vessel elements, while yellow-poplar has a scalariform perforated plate composed of thin bars 2 to 16 microns in width.

EFFECT ON LONGITUDINAL PERMEABILITY OF HEARTWOOD

The reduction in longitudinal permeability following conversion of sapwood to heartwood was not significantly related to the diameter growth rate **(Table 3).** Factors such as genetics and injury probably had a greater influence on how trees seal off the heartwood from the physiologically living sapwood than diameter growth rate. There were obvious differences among the three species in the percent loss in longitudinal permeability when sapwood turned into heartwood. On the average, northern red oak, which does not form tyloses in the heartwood, lost only 26 percent of its permeability when the sapwood turned into heartwood. In contrast, black walnut and yellow-poplar, which had tyloses present in the heartwood, lost more than 99 percent of their permeability when the sapwood turned into heartwood.

CONCLUSIONS

Faster diameter growth produced a more permeable sapwood (longitudinally) in yellow-poplar, but not in northern red oak and black walnut. Growth rate had no effect on either vessel lumen area percentage or radial permeability in sapwood of northern red oak, black walnut, or yellow-poplar. Growth rate did not affect the decrease in longitudinal permeability when sapwood is converted to heartwood. Newly formed heartwood of northern red oak retains high longitudinal permeability while black walnut and yellow-poplar wood show more than a 99 percent decrease in longitudinal permeability following conversion of sapwood to heartwood.

LITERATURE CITED

1. Chen, P.Y.S. and Y. Tang. 1991. Variation in longitudinal permeability of three U.S. hardwoods. Forest Prod. J. 41(11/12):79-83.
2. Hilt, D.E. and M.E. Dale. 1987. Effects of precommercial thinning on diameter growth in young central hardwood stands. *In*: Proc. 6th Central Hardwood Forest Conference, Knoxville, Tenn. pp. 179-187.
3. Kelso, W.C., R.O. Gertjejensen, and R.L. Hossfeld. 1963. The effect of air blockage upon the permeability of wood to liquids. Tech. Bull. 242. Univ. of Minnesota Agri. Expt. Sta., St. Paul, Minn. 40 pp.
4. Lamson, N.L. 1980. Effect of fertilization on four species in mature Appalachian hardwood forests. *In*: Proc. 3rd Central Hardwood Forest Conference, Columbia, Mo. pp. 449-457.
5. Panshin, A.J., C. DeZeeuw, and H.P. Brown. 1964. Textbook of Wood Technology, Vol. I. 2nd ed. McGraw-Hill, Inc., New York.
6. Phelps, J.E. and E.C. Workman, Jr. 1992. Vessel area studies in black walnut (*Juglans nigra* L.). Wood and Fiber Sci. 24(1):60-67.
7. Schlesinger, R.C. and R.D. Williams. 1984. Growth response of black walnut to interplanted trees. Forest Ecology and Management 9:235-243.
8. Van Sambeek, J.W., F. Ponder, Jr., and W.J. Rietveld. 1986. Legumes increase growth and alter foliage nutrient levels of black walnut saplings. Forest Ecology and Management 17(3/4):159-167.
9. Zhang, S.Y. and Y. Zhong. 1991. Effect of growth rate on specific gravity of East-Liaoning oak (*Quercus liaotungensis*) wood. Canadian J. of Forest Res. 21:255-260.