IRG/WP/97 - 20110

THE INTERNATIONAL RESEARCH GROUP ON WOOD PRESERVATION

Section 2 Test methodology and assessment

Development of Decay in Untreated Second-Growth Douglas-Fir Using Two Exposure Techniques in North Queensland

Jack Norton & Scott Kleinschmidt
DPI Forestry, PO Box 631
Indooroopilly Q 4068 Australia

Rodney C. De Groot & Douglas Crawford
USDA Forest Products Laboratory
One Gifford Pinchot Drive
Madison, Wisconsin 53705 2398 USA

Paper prepared for the 28th Annual Meeting
Whistler, Canada
May 25-30, 1997

I.R.G. Secretariat
KTH Brinnelvagen 34
S-100 44 Stockholm
Sweden

Development of Decay in Untreated, Second-Growth Douglas-Fir Using Two Exposure Techniques in North Queensland[1]

Jack Norton
Rodney C. De Groot
Scott Kleinschmidt
Douglas Crawford[2]

ABSTRACT

The results of two exposure techniques for evaluating the development of wood decay in untreated, mill-run lumber from secod-growth Douglas-fir containing both sapwood and heartwood are presented. Nominal 50 mm by 100 mm by 2.5 m (2 in. by 4 in. by 8 ft) lumber, No 2 and better, was obtained from a production run in a mill that was processing second growth, Coastal Douglas-fir in western Oregon, USA. Untreated wood members were kiln dried, then shipped to Queensland. At the Timber Research Laboratory, Indooroopilly, Queensland, two units for above-ground exposure were fabricated from each 2.5-m (8-ft) untreated member. A 600-mm (2-ft) length was cut from each end of each member. One 600-mm section was transversely bisected, forming two, 300-mm (12-in.) units; the other 600-mm section was used in a separate study. The middle 1200-mm (4-ft) length was used as one exposure unit. These shorter members were then milled to form a joint with a 100-mm (4-in.) overlap. Two holes were drilled through the overlapping portions, and the two sections were bolted together. The identity of the 1200-mm length and the end-matched lapped jointed section was maintained throughout the exposure. Both units were positioned on a horizontal support approximately 1 m above ground in an open field near Innisfail, Queensland. As units were installed in the field, all cut surfaces inside the joint and at the ends were brush coated with a commercially available (in Australia) copper naphthenate emulsion containing 1% copper. Decay was first detected after 2 years of exposure and it advanced rapidly during the third year. The pattern of results suggests that the weathering of the upper, exterior surface and the retention of a high moisture content by the 50-mm-thick wood, when wetted, is more important in predisposing wood to decay than is end-grain absorption of moisture. Decay ratings for the 1200-mm members were equivalent to those observed with the lapped joints. The two types of units are of equal utility in demonstrating the potential for decay in a wood material that has natural susceptibility to decay.

---

[1]This research was supported in part by the Western Wood Products Association, Portland, Oregon, USA.

[2]The first and third authors are, respectively, Program Leader Timber Protection, and Field Technician Timber Protection Program, Queensland Department of Primary Industries, Indooroopilly. Queensland, Australia. The second and fourth authors are, respectively, Research Plant Pathologist and Chemist, USDA Forest Products Laboratory, Madison, Wisconsin, USA.

INTRODUCTION

De Groot (1992) studied the rate at which wood decay developed in test units of southern pine sapwood that were exposed above ground in southern Mississippi. Results showed that decay developed quickly and progressed uniformly in nominal 50-mm-thick members that were joined together with a union composed of overlapping members. Subsequently, these lapped joints have become a subject of interest as a possible method for monitoring decay above ground in AWPA standardized tests (AWPA 1994), which tends to emphasize test materials of uniform composition.

At the DPI Forestry Timber Research Laboratory at Indooroopilly, Queensland, we had an opportunity to evaluate the durability of untreated and preservative-treated, mill-run lumber that was cut from second-growth Douglas-fir trees from the United States. This material was not uniform. It consisted of both heartwood and sapwood. According to US criteria, the heartwood of Douglas-fir has a moderate degree of natural durability, but sapwood has none. The heartwood of Douglas fir is regarded as nondurable according to the Australian natural durability classification system.

An objective of this study was to compare the results of two exposure techniques that evaluate the development of wood decay in this nonuniform wood resource when exposed above ground.

MATERIALS AND METHODS

Nominal 50-mm by 100-mm by 2.5-m (2-in. by 4-in. by 8-ft) lumber, No 2 and better, was obtained from a production run in a mill that was processing second growth, Coastal Douglas-fir in western Oregon, USA Lumber from second-growth forests has a greater percentage of sapwood than does timber from old-growth trees. Materials used in this study were removed from the production run and processed without regard to sapwood or heartwood content. This selection process generated a sample that accurately reflected timber as it is produced in industry. It also contributed to the variability of the resource in terms of potential for decay. Untreated wood members were kiln dried either reserved for controls or treated, then shipped to Queensland. Materials designated for controls were randomly selected from the entire lot of timber used in this investigation. Treated and untreated materials were separately wrapped; therefore, there was little opportunity for contamination of the control materials

At the Timber Research Laboratory, two units for above-ground exposure were fabricated from each of the 2.5-m (8-ft) untreated members (Fig. 1). A 600-mm (2-ft) length was cut from each end of each member. One 600-mm end section was bisected transversely, forming two, 300-mm (12-in.) units. The other 600-mm end unit was used in a separate study. The middle 1200-mm (4-ft) length was used as one exposure unit These shorter (300 mm) members were then milled to form a joint with a 100-mm (4-in.) overlap. Two

holes were drilled through the overlapping portions, and the two sections were bolted together. The identity of the 1200-mm length and the end-matched lap-jointed section was maintained throughout the experiment.

Both the 1200mm length and the lap joint units were positioned on a horizontal support approximately 1 m above ground in an open field near Innisfail, Queensland. Specifically, the exposure site was on the Queensland Department of Primary Industries experimental station located at South Johnson. Units were positioned with the longitudinal axis in a north/south direction. Just prior to indlation in the field, the lapped joints were disassembled and the bolt holes as well as the cut surfaces inside the joint and the cut ends were brush coated with a commercially available (in Australia) copper naphthenate emulsion containing l% copper. The lapped joints were then reassembled and placed on the support rack The cut ends of the 1200 mm members were also brush coated with copper naphthenate emulsion.

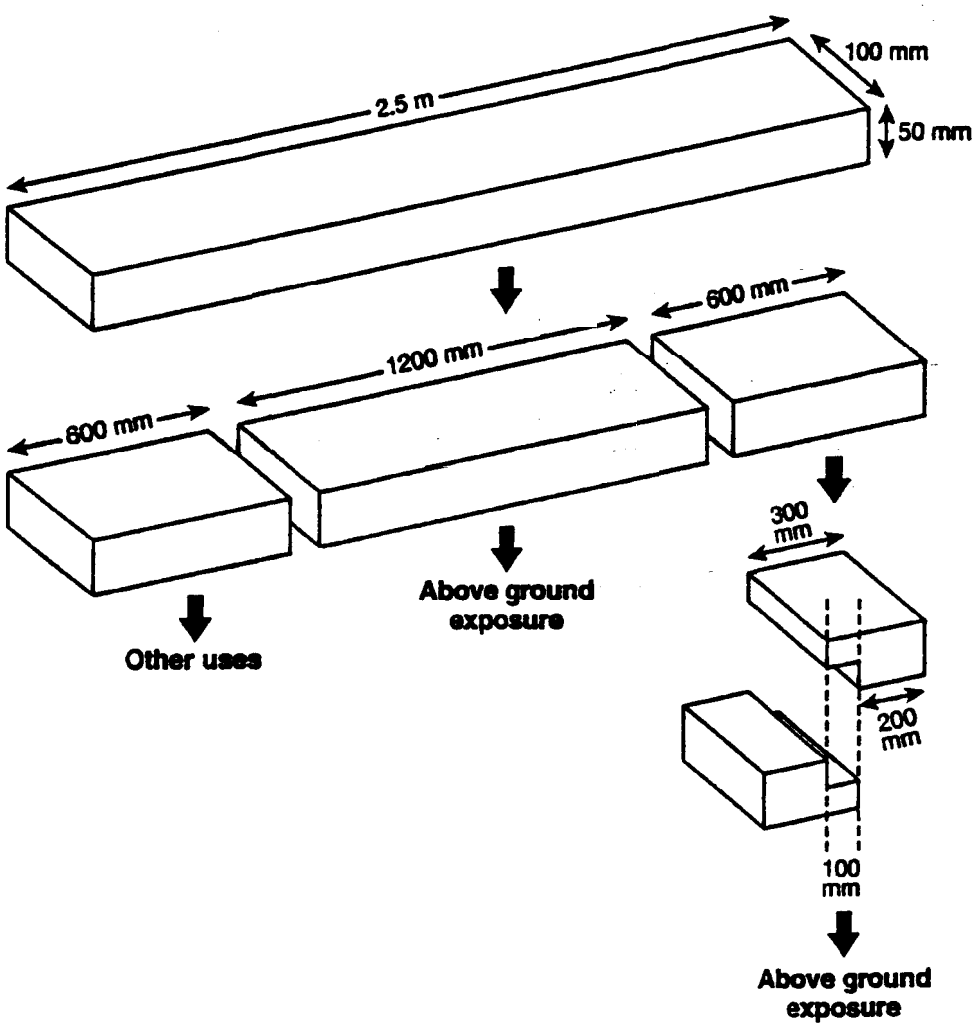

Figure 1. Fabrication of test units from each of the 2.5-m members.

All units were installed during the last week of October, 1993, and were visually inspected annually thereafter during September. The upper and lower surfaces of the 1200 mm lengths were inspected and rated separately. Each half of the lapped joint was inspected independently and identified by position of the lap—either upper or lower. In addition, surfaces within the joint were inspected for presence and subsequent development of decay. Criteria used in rating decay at the first year's inspection were slightly different from criteria used subsequently. However, this has little consequence to data interpretation because all components were sound after 1 year of exposure. Ratings of the cross-sectional area that is decayed are made at the point of worst-case decay along the length of the member. The people who did the inspections differed each year, with the exception of one inspector from Queensland DPI who participated in all inspections. The following are the ratings used to describe the extent of decay in the test units:

Rating	Criteria used in 1994	Criteria used in 1995, 1996
10	sound	sound, no evidence of decay
9	trace	<3% of cross-section decayed
8	—	3% to 10% of cross-section decayed
7	moderate	>10% to 25% of cross-section decayed
6	—	>25% to 50% of cross-section decayed
4	heavy	>50% to 75% of cross section decayed
0	failure	>75% decayed, may be easily broken

RESULTS

Decay was first detected after 2 years of exposure, and it advanced rapidly during year 3, as evidenced by a larger number of replicates with ratings of 7 or less (Table 1). Some of the year 2 ratings of 8 or 9 for the 1200-mm members (Table 2) are perceived to be reflective of the technical difficulties in working with a new inspection system and a variable wood resource.

Summary statistics for decay ratings made at the end of the third year of exposure, when decay was most severe, are displayed as box plots (Velleman 1989) in Figure 2. With both units, the ratings for decay were more severe when made from the upper surfaces than from the lower surfaces. For ratings made on comparable surfaces, the ratings for decay in the 1200-mm members are not significantly different from those in the lapped joints. The number of replicates with ratings of 7 or less, when observed from the upper surface, was one greater for the 1200-mm members than for the lapped joints. After 3 years of exposure, decay was detected in joints of only three units.

Table 1. Number of replicates (20 per treatment) with rating of 7 or less.

Year 2					Year 3				
1200-mm member		Lap joint			1200-mm member		Lap joint		
top	bottom	top	bottom	joint	top	bottom	top	bottom	joint
2	2	1	1	0	9	3	8	1	2

Table 2. Ratings for decay in nominally 50-mm-thick, untreated Douglas-fir members exposed above ground.

Sample	Rating for Year 1					Rating for Year 2					Rating for Year 3				
	1200-mm member		Lap Joint			1200-mm member		Lap Joint			1200-mm member		Lap Joint		
	Top	Bottom	Bottom	Top	Joint	Top	Bottom	Top	Bottom	Joint	Top	Bottom	Top	Bottom	Joint
1	10	10	10	10	10	6	8	9	9	10	6	9	10	9	10
2	10	10	10	10	10	8	8	10	10	10	10	6	10	10	10
4	10	10	10	10	10	9	10	10	10	10	8	10	9	10	10
5	10	10	10	10	10	9	9	10	9	10	10	8	9	10	10
6	10	10	10	10	10	7	9	10	10	10	7	10	10	10	10
7	10	10	10	10	10	9	9	10	10	10	10	10	10	10	10
8	10	10	10	10	10	9	9	10	10	10	10	10	10	10	10
9	10	10	10	10	10	9	10	10	9	10	4	10	7	8	10
10	10	10	10	10	10	8	9	9	10	10	7	9	7	8	10
11	10	10	10	10	10	8	9	10	8	10	6	10	9	10	10
12	10	10	10	10	10	8	9	9	9	10	9	10	9	8	10
13	10	10	10	10	10	7	0	9	10	10	0	0	4	10	10
14	10	10	10	10	10	8	8	9	10	10	9	10	9	10	9
15	10	10	10	10	10	8	9	7	7	10	7	9	0	0	4
16	10	10	10	10	10	8	6	10	10	10	0	0	7	9	10
17	10	10	10	10	10	9	9	10	10	10	7	10	10	10	10
18	10	10	10	10	10	9	9	10	10	10	10	10	7	10	10
19	10	10	10	10	10	8	7	9	10	10	9	8	4	10	7
20	10	10	10	10	10	8	8	9	9	10	9	10	7	10	10

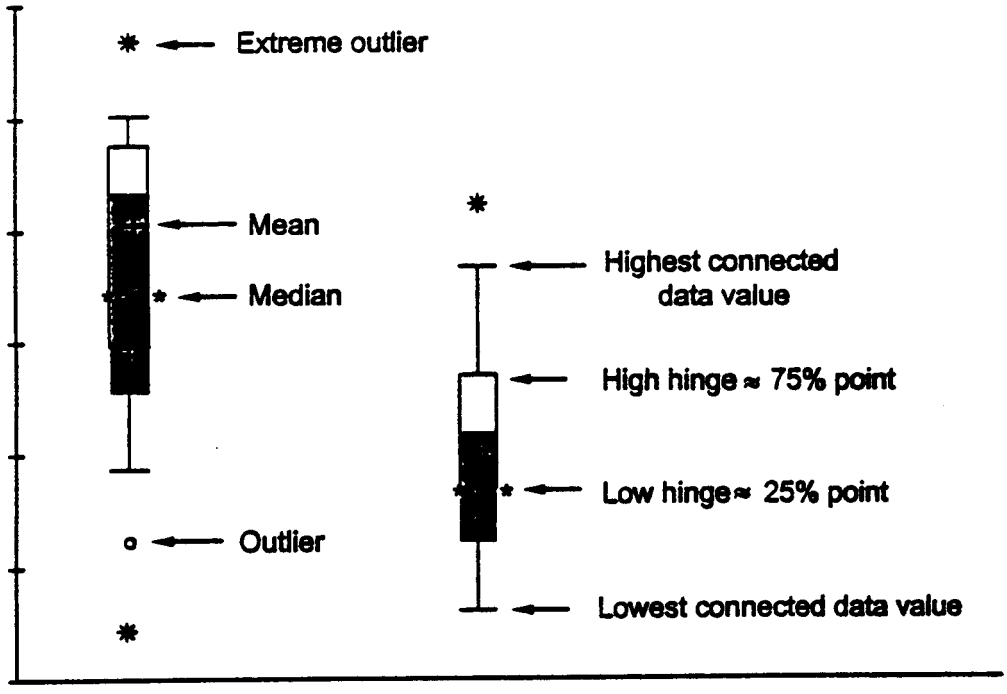

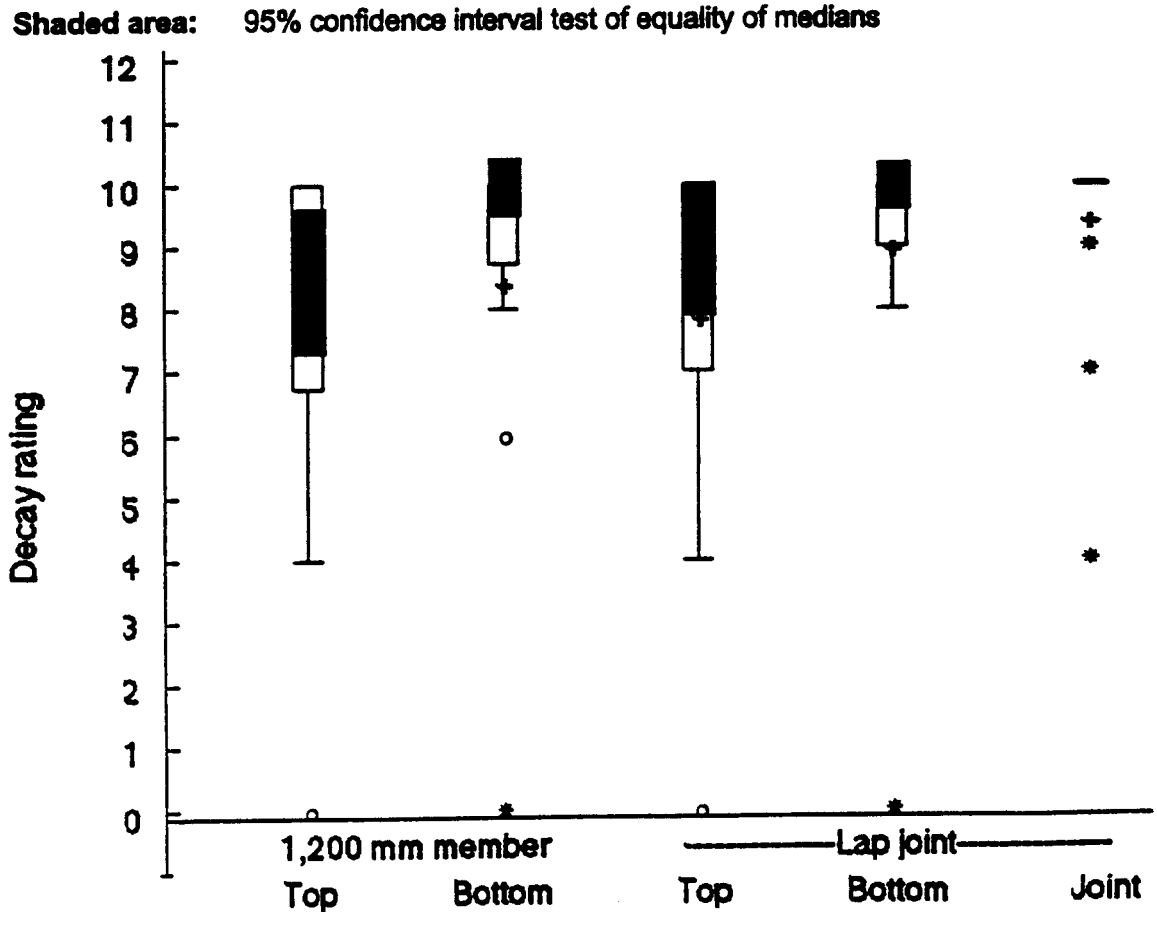

Figure 2. (top) Components of a box plot; (bottom) Decay ratings for twenty replicate units exposed above ground near Innisfail, Queensland.

DISCUSSION

The pattern of results suggests that in these units the weathering of the upper, exterior surface and retention of a high moisture content by the 50-mm-thick wood, when wetted, is more important in predisposing wood to decay than is end-grained absorption of moisture.

The greater severity of decay that was observed from the upper surfaces of both units suggests that weathering of that surface and entry of water through surface checks predisposes wood to internal decay. Evidence of some checking was observed in all wood members at the first inspection, but no decay was seen at that time. It is not unreasonable to assume that the interior of the wood gets wetted from water entering through the checks. The thickness of the wood units may further enhance development of decay. The lower surface does not get wetted as frequently nor is it subjected to the wetting/drying stresses that would cause more checking on the upper surface.

The cross-sectional distribution of sapwood and heartwood in this second growth material was not uniform along the length of the original 2.5-m (8-ft) members. It may be assumed that there was greater opportunity for some cress-sectional region in the longer member, having a greater percentage of sapwood than occurred in the shorter length that was converted to a lapped joint. Because the ratings for decay reflect the most severe incidence of decay anywhere along the length of each respective unit, more severe decay in the 1200 mm (4 ft) members might be expected. This did not occur. Even though ratings for individual, end-matched units could differ after 3 years of exposure, decay ratings for comparable surfaces in the total population of units were not significantly different (Fig. 2). If a decay rating of 7 or less is regarded as the inability of the member to perform structurally, the two units may be considered as being equal in their potential for failure as a result of decay (Table 2).

The perceptions of possible differences in rating assessments during the second and third inspection illustrate the rigor of the rating scheme. The inspector has to make a quantitative judgment. The categories of incremental decay are sufficiently narrow during the early stages of decay so that variation of human assessment about the flex points will not impact the population trend if a sufficiently large number of replicates is used. At the later stages of decay, decomposition is so extensive that a difference of one category, again, will not mask the trend in material performance.

CONCLUSIONS

A brush coating of copper naphthenate preservative imparted significant protection from decay to the end grain and lateral surfaces of joints in the lapped units. The pattern of results indicates that decay became established in the upper surfaces of these horizontally positioned members. The two types of units are of equal utility in demonstrating the potential for decay in a wood material that has inherent natural variability in susceptibility to decay.

LITERATURE

American Wood-Preservers' Association. 1994. Report of Sub-Committee P-6 Methods of Evaluation of Wood Preservatives. p. 282-284 IN: American Wood Preservers' Association. Proceedings Ninetieth Annual Meeting. Vol. 90. 598 p. AWPA. Woodstock, MD.

De Groot, Rodney C. 1992. Test assemblies for monitoring decay in wood exposed above ground. Int. Biodeterioration & Biodegradation 29: 151-175.

Velleman, P. F. 1989. Data desk. Copyright Data Description, Inc., Ithaca, NY. Odesta Corp., Northbrook, IL.

—000—