In: Gopu, Vijaya K.A., ed. Proceedings of the international wood engineering conference; 1996, October 28-31; New Orleans, LA. Baton Rouge, LA: Louisiana State University: Vol. 3: 263-268

Structural Performance of Light-Frame Truss-Roof Assemblies

Ronald Wolfe, **USDA Forest Service, Forest Products Laboratory, USA**

Abstract

Five full-scale truss-roof assemblies were tested under simulated gravity loads. Preliminary tests included evaluation of lumber and connection properties and individual truss stiffness and strength. The results provide a basis for assessing the benefits of system interactions on the structural performance of truss assemblies and a data base for developing and verifying system computer models. The results show how loads are distributed away from relatively limber or partially failed trusses and how sheathing–chord nailed connection stiffness deteriorates with load level. Ultimate loads and modes of failure for systems and their constituent members are compared to assess the conservatism of weak-link design theory applied to interactive multiple-member assemblies. These results will be useful to those developing system factors for light-frame wood roof assemblies.

Keywords: Testing; light-frame roof assemblies trusses; load distribution; stiffness; strength; vertical load; reaction; deflection.

Introduction

Light-flame construction methods were adopted in the mid-nineteenth century as a less labor-intensive replacement for heavy timber construction. Elimination of large columns and beams and their associated mortise and tenon joints cut labor requirements. This change also resulted in distribution of loads over a greater number of small members rather than a few large members. About 50 years ago, standards committees began to recognize structural advantages to using parallel or "repetitive" member structural assemblies. After 15 years of debate on the issue, a multiple-member systems factor was adopted by the American Society for Testing and Materials Committee (ASTM, 1970) and the wood industry (NFPA, 1970). However, the adjustment was restricted for use on bending stresses in dimension lumber. Standards were developed for light-flame metal-plate-connected wood truss design, which had been evolving since 1960, to take advantage of commodity markets established for light-frame construction. Targeting a design spacing of 610 mm (24 in.) on center to mimic conventional light-frame sheathed assemblies placed truss assemblies in the category defined as multiple-member systems.

Despite their similarity to conventional rafter systems, truss assemblies do not receive the same "systems" advantage as dimension lumber. While a truss–rafter carries the same kinds of loads as does a dimension lumber rafter, it consists of members that are primarily axially loaded. Bending stress plays a secondary role in the design capacity of a truss. Whereas a dimension lumber rafter is given a 15% increase in design load as a bending element in a multiple-member system, a truss may realize only a 3% to 8% increase depending on its configuration and the load distribution.

The problem of evaluating the advantage of system interactions on truss load capacity involves (1) defining the adjustment precisely in terms of system performance and (2) developing a means for quantifying the adjustment for truss assemblies.

Objective and Scope

The objective of this paper is to present an overview of work that provided a basis for evaluating system interaction effects on truss performance and for developing and verifying computer models that may be used to simulate system behavior.

Methods

Five full-scale truss-roof assemblies were tested under simulated gravity loads (Table 1, Fig. 1). The tests were conducted in two phases: (1) assemblies representing a section taken from mid-length of a roof without the effects of a rigid end support and (2) assemblies representing a section of roof that included a gable end support. Assemblies tested in phase I deviated from conventional construction in that they were fabricated for three distinct truss stiffness categories and designed with a bias against heel–joint failure by using 1.1-mm-thick (18 gauge) plates rather than l-mm-thick (20 gauge) plates at heel joints.

The Forest Products Laboratory is maintained in cooperation with the University of Wisconsin. This article was written and prepared by U.S. Government employees on official time, and it is therefore in the public domain and not subject to copyright.

Table 1–Tests on truss–roof assemblies

Test[a]	Roof type	Truss type	Design load (kN)	Grade	Trusses (no.) Stiff-ness	Trusses (no.) Strength
I	1	3:12 Fink	6.85	2	21	12
	2	6:12 Fink	8.23	2	21	12
II	3	3:12 Fink	7.74	2D	12	4
	4	6:12 Fink	9.48	2D	12	4
	5	6:12 Scis.	9.48	2D	12	4

[a]See Figure 1. Phase I trusses were fabricated in three distinct stiffness classes and had thicker heel plates than conventional design.

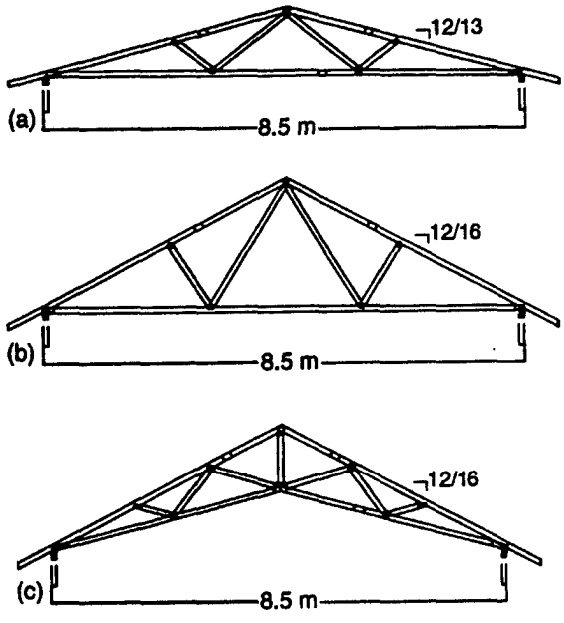

Figure 1—Truss configurations tested in roof assemblies.

Assemblies tested in phase II were more representative of conventional construction. The tests evaluated lumber sheathing and connection properties, truss stiffness and strength inside and outside the assembly, and full system load to failure. Truss and assembly designs and test procedures were discussed in detail by Wolfe and others (1986,1989,1991).

Truss Configurations

Three basic 8.5-m (28-ft) span truss configurations were considered (Fig. 1). The two Fink truss configurations tested in phase I were designed with a more rigid heel connection than that found in conventional roof trusses and were fabricated from lumber sorted into three distinct stiffness categories to magnify the variation in truss stiffness. In phase II, all the truss configurations shown in Figure 1 were conventionally designed and fabricated using No. 2 D Southern Pine.

The rigid heel connections and truss stiffness variability incorporated in phase I addressed specific industry concerns. Thicker heel plates were used to address concerns that conventionally designed trusses (Truss Plate Institute, TPI-85) would have a bias toward joint failure in short-term tests as a duration of load adjustment is incorporated in lumber design values but not in joint design values. The stiffness categories were intended to represent the extreme case of stiffness variation to highlight the effect on load distribution.

Truss Tests

A total of 78 trusses (Table 1) were tested as part of this research program. All trusses were tested under a simulated gravity load for stiffness outside the assembly. In phase I, 21 trusses were fabricated for each roof, 7 in each of three stiffness categories. Of these, 12 trusses were tested to failure outside the assembly and 9 were used to build each test roof assembly. In phase II, 12 trusses were fabricated for each roof; 4 trusses were tested to failure outside the assembly and the remaining 8 were used to fabricate each roof assembly. A gable end truss was made using plywood sheathing on one of the four failed trusses. For the scissors roof, the 6:12 Fink gable end was reused.

Assembly Tests

All assembly tests were conducted using a three-dimensional structural test frame at the Forest Products Laboratory (FPL) (Fig. 2). Each roof assembly had plan dimensions of 5 by 8.5 m (16 by 28 ft) and consisted of nine trusses, spaced 0.6 m (24 in.) on center, sheathed using 48/81 cm (19/32 in.) plywood

Support walls spaced 8.5 m (28 ft) apart were set up inside the test frame to provide clearance for the hydraulic-ram loading units (Fig. 3). The walls were 5.6 m (18.5 ft) long. Load cells, placed at 0.6-m (24-in.) spacing along the wall to coincide with the truss reaction points, supported a continuous bearing plate. The ends of the bearing plate were connected by pins to the support wall so that the plate could deflect as a simple beam in the horizontal plane as trusses deflected Tresses were attached to the top of the bearing plate using 1-mm-(0.04-in.-) thick galvanized steel wind clips.

Four loading units (Fig. 3) were used for each truss. Each loading unit consisted of a hydraulic ram, three pulleys, and a steel cable. The cable was passed over a pulley on top of the ram and under pulleys on either side of the ram. As the ram was extended the cables pulled downward on loading yokes positioned at uniformly spaced intervals along the top chord of each truss. Four loading units therefore applied force at eight locations on each truss.

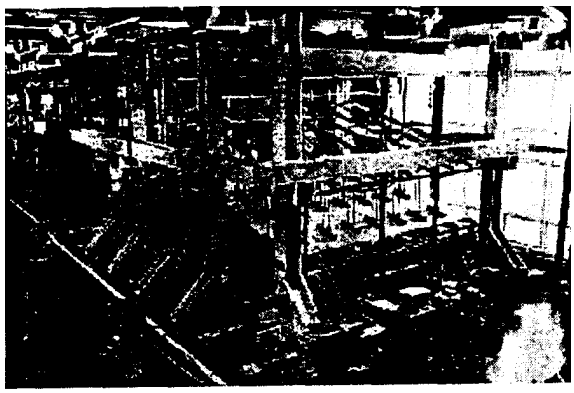

Figure 2—Three-dimensional test frame at FPL.

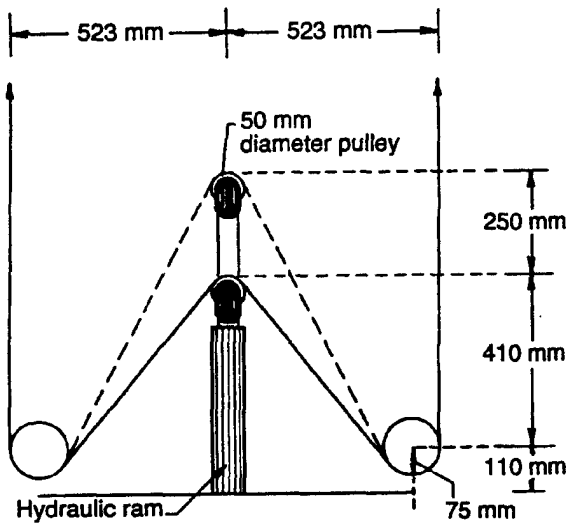

Figure 3—Hydraulic ram loading unit.

The load control system was designed with the capability of loading the roof in half-truss increments. The two loading units on each half-buss were hooked in series. Hydraulic lines for each half-truss were connected in parallel to a pressure manifold through a control valve. Pressure in the manifold was monitored using an electronic pressure transducer to estimate the applied load.

Displacements measured during each assembly test included vertical deflections of the trusses, horizontal movement of the bearing plates, and movement of the sheathing relative to the truss chords. Truss deflections measured at the top chord nodes relative to the reactions were used in conjunction with truss reactions to characterize assembly interaction effects on truss performance. Measurements of horizontal displacements of the bearing plates helped ciarify how bearing wall stiffness in the transverse plane affects load distribution. Measurements of the sheathing–chord slip were used to assess the influence of composite action as a truss is loaded to failure in an assembly.

Assembly tests were conducted in steps, beginning with loads applied to individual trusses and ending with loads distributed over the entire roof area. This process was done once with the sheathing nailed at 0.3-m (12-in.) spacing, then repeated with the sheathing nailed at 0.15-m (6-in.) spacing. For each loading, all system reactions and truss deflections were recorded at load increments of 25% of the design load up to design load. For the final test to failure, loads were directly applied to only the inner seven trusses. Loading continued until the assembly accepted no further increases.

Results and Discussion

Assembly Response to Gravity Loads

Figure 4 provides a somewhat exaggerated example of the most obvious advantage of system interaction: the deflections of trusses tested inside the assembly are much less varied than those measured when trusses are tested outside the assembly. This is especially obvious for the phase I systems comprising trusses of widely varying stiffness.

If there were a 1:1 correlation between strength and stiffness, it would be fairly simple to assign a load-sharing increase for a system subject to uniformly distributed load because the system capacity would be equal to that of the average truss. The fact that such a correlation does not exist and that loads that cause failure are rarely uniformly distributed makes the problem more complex.

To get a better perspective of how loads are actually distributed we derived influence matrices for each roof. Each matrix contains the reactions of all trusses in the assembly that correspond to load applied to each individual truss. Figure 5 shows one of these matrices. The reactions shown in this figure, which are expressed as a fraction of the total applied load, are insensitive to load magnitude within the linear range of the loaded truss. By superimposing reaction vectors for the loads distributed to each truss, we could closely approximate system load distribution under any combination of loaded tresses in the assembly. The comparison of a predicted reaction and a reaction measured under a uniformly distributed load illustrates how well the superposition of individual truss load influence vectors predicts the reaction profile for the full system (Fig. 6).

If we assume that the center truss in the assembly loses 50% of its stiffness as a result of partial failure, we can use the superposition method to predict how loads will be redistributed to the adjacent trusses, assuming that these loads do not exceed the linear range of the adjacent trusses. Such an estimate for the 6:12 pitched roof tested in phase II is shown in Figure 7. Using superposition to redistribute load from truss 5 and to reduce the load distributed to it, this analysis shows increases on other trusses ranging from less than 5% to 15% for trusses within three truss spaces.

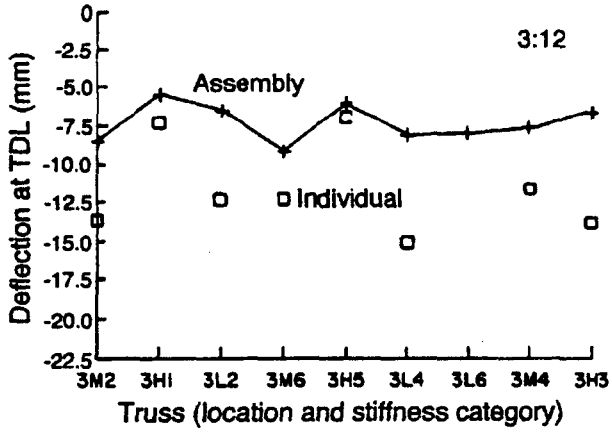

Figure 4—Deflection profile for trusses of test roof 1 loaded to design load inside and outside the assembly.

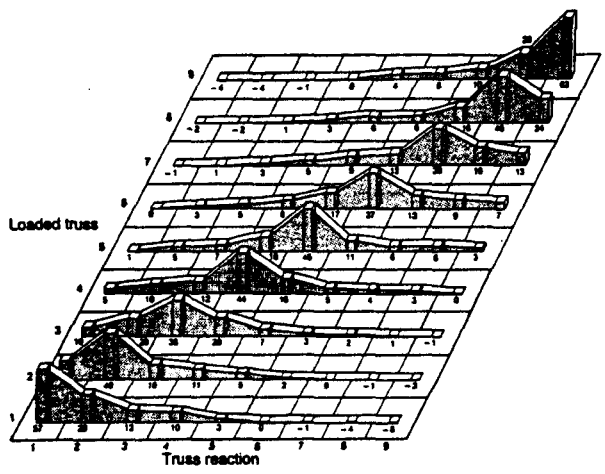

Figure 5—Assembly reaction influence matrix for phase II 3:12 Fink truss assembly. Values are percentage of applied load taken by each truss.

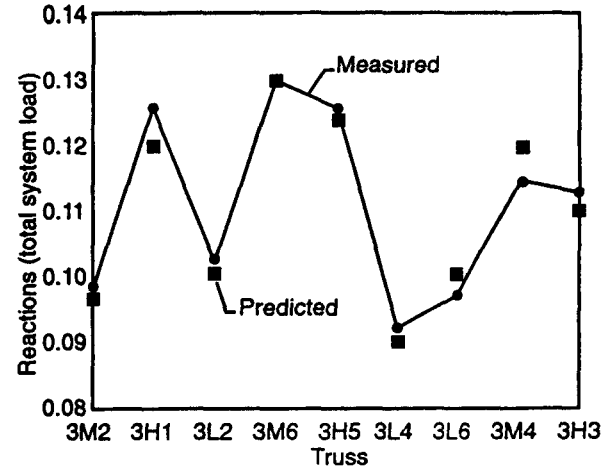

Figure 6—Comparison of predicted and measured reactions in uniformly loaded assembly. Reaction values are fractions of total system load.

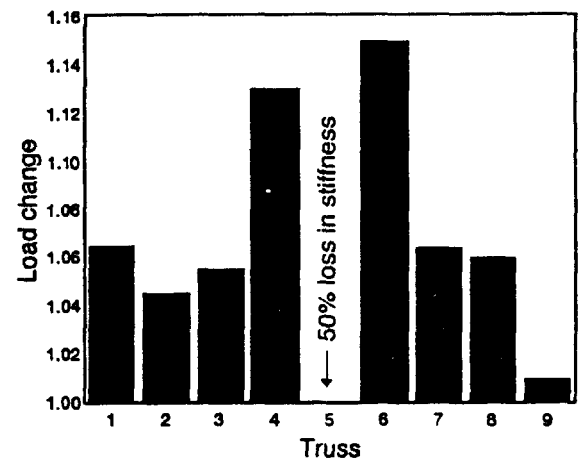

Figure 7—Redistribution of load after partial failure of one truss in system.

In deriving a multiple-member adjustment, a factor to consider is residual capacity in the event of a design load failure. If a partial failure should occur as a result of misfabrication, mishandling, or an accidental overload on one truss, what is the probability that the remaining trusses would be able to sustain the roof design load? To answer this question, we must make several assumptions about assembly interaction:

- Loads are not uniformly distributed to the remaining assembly when one truss fails. Our tests suggest that an interactive grouping consists of roughly seven trusses: if one truss fails, more than 95% of its redistributed load remains within this interacting group.
- If we assume that 50% of the redistributed load is carried by the two adjacent trusses, we must determine what this means in terms of the probability distribution function (PDF) for truss capacity. This requires some assumptions about the PDF and the location of the "design" truss within the PDF.
- For the capacity to carry the redistributed load, adjacent trusses must have a short-term strength equal to the design load (minus adjustments for duration of load and factor of safety) multiplied by the load distribution factor f_{LD}. In the case of the scenario depicted in Figure 7, f_{LD} fix adjacent trusses is 1.15.

If there is a greater than 5% chance that a "design-capacity" truss will be bordered by one or two trusses

that do not have the capacity to carry a 15% overload, a multiple-member adjustment may not be warranted. This could be estimated on the basis of the assumed PDF and the binomial distribution function or computer simulation.

Sheathing–Chord Displacement

Along with the redistribution of load away from relatively limber or partially failed members, composite action between the sheathing and truss also plays a role in bolstering the stiffness and strength of trusses used in assemblies. The composite action, which in effect increases the effective section modulus of the truss chord, is dependent on the rigidity of the connection as well as the stiffness of the sheathing and chord, which act together.

Figure 8 shows how the sheathing moves relative to the chord members in a roof system loaded to failure. Although the composite action increase in stiffness is valid within the design load range, we recorded sheathing displacements as high as 2 mm (0.09 in.) prior to failure in some cases. This is well beyond the 0.38-mm (0.015-in.) displacement traditionally recognized as a design limit for nail slip. If the assembly adjustment is to be defined as a ratio of ultimate load capacities, it may be necessary to limit the recognition of composite action to glued assemblies.

When the test roof assemblies were loaded to failure with load uniformly distributed to the seven inner trusses, load-deflection traces appeared to be fairly linear and the distribution of assembly reactions showed no significant change with load. However, these characteristics changed when a member failed. Figure 9 shows how the relationship between assembly reactions and peak deflections changed beyond the point of first failure. The hydraulic loading system experienced a sudden loss in pressure as a result of sudden extension of a loading ram. Thus, we were not able to simulate what might actually happen under a true gravity load. In most cases, when the line pressure returned to the point of the previous failure, the slopes of the system load versus deflection curves dropped dramatically and a second failure occurred at a load close to that at which the first load failed Failures that occurred as a result of reloading mimicked the initial failure in location and mode when the reloading returned to the initial failure load. However, after three adjacent trusses failed, the system was no longer able to redistribute load from the failure zone. At this point, loads to the failed trusses were shut off and the remaining trusses were loaded to failure. In these cases, the failures were generally in different locations.

These results suggest that if this had been a gravity load, the average peak deflection would have increased in a linear relation to applied load to the point of first failure. At that point, three or four trusses would have failed in rapid succession, which could have caused a sheathing

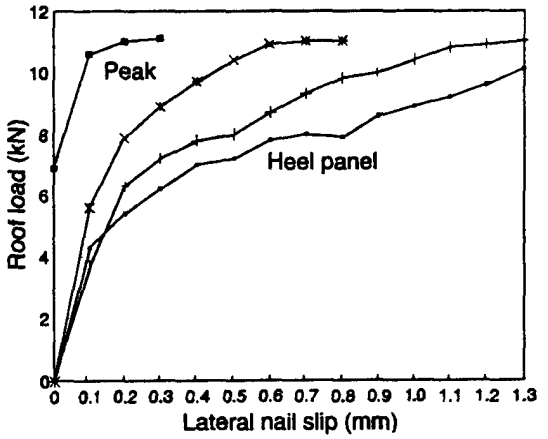

Figure 8 —Sheathing–chord slip measurements.

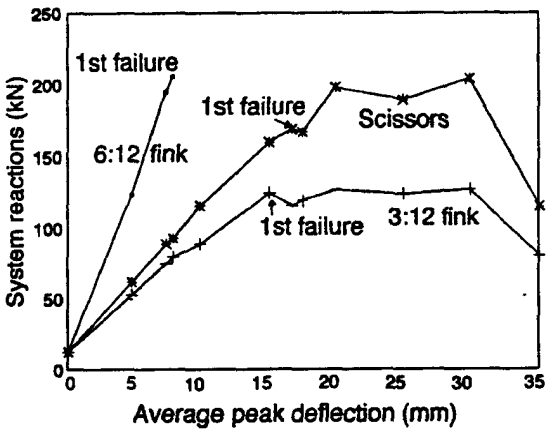

Figure 9—Change in load after first failure.

failure and collapse of the roof section. We cannot be centain that the remaining trusses would have continued to carry the full system load once these members had failed.

Conventional design of roof assemblies assumes that each truss in the assembly carries the same load and has a strength that limits its long-term load capacity to a load that would cause the stress in any truss element to exceed the fifth percentile strength for its grade and species adjusted for duration of load. In other words, the assembly is assumed to have the strength of the "design truss."

Table 2 shows how the assembly maximum load, distributed to the constituent trusses according to their tributary area, compares to maximum load measured for all trusses tested to failure. The failure loads shown for individual trusses include trusses that failed in the

Table 2—Truss failure loads inside and outside an assembly

	Individual trusses				Assembly failure—tributary area load			
	Design load	Failure load (kN)		No.	Max load	Ratio to	Ratio to individual	
Roof	(kN)	avg.	min.	tested	(kN)	design	avg.	min.
1	6.85	26.2	18.4	17	20.7	3	0.80	1.13
2	8.23	36.6	26.7	20	34.8	4.2	0.95	1.30
3	7.74	19.3	16.1	12	17.9	2.3	0.93	1.11
4	9.48	25.2	19.8	11	25.8	2.7	1.02	1.3
5	9.48	24.8	17.8	12	26.2	2.8	1.06	1.47

system. At the point of failure, the effect of the sheathing–chord composite action was considered negligible. For the five assemblies tested, the tributary area load at assembly failure averaged 95% of the average maximum load for the individual trusses and 126% of the measured minimum truss strengths.

Summary

Data collected in this research program support the premise that the structural performance of a conventionally designed truss–roof assembly is superior to that of its constituent trusses loaded as independent structural elements. The assembly will continue to sustain system design load in the event of a partial failure of a weak or damaged truss, and the system capacity appears to be more closely represented by the mean strength of the constituent trusses than the minimum strength truss.

The data from these tests alone provide insufficient basis for quantifying assembly effects for truss assemblies. However, the data do provide some insight into how loads are distributed and how that distribution is affected by system interactions. Points to consider in the evaluation of an assembly adjustment for truss assemblies include the following

- The test truss assemblies exhibited a fairly linear load deflection response to the point of initial failure.
- Initial failure defines the maximum load for the system. On average, this occurred at three times the design load for the constituent trusses and was closer to the average failure load for trusses tested individually than to the minimum truss strength.
- Load distributed from any one truss loaded in the assembly drops off with distance from the truss. If a single truss fails in an assembly as a result of misfabrication, mishandling, or accidental overload, trusses immediately adjacent to the failed truss will receive the greatest portion of the redistributed load. Loads distributed to other trusses will drop off with distance depending on the rigidity of the load-distributing element and the stiffness of the adjacent members. For assemblies tested in this study, trusses more than three spaces away from the failed truss received a negligible portion of redistributed load. For an assembly to warrant an increase in design load capacity, there should be some assurance that if a weak link truss fails at or below design load, the adjacent members will have the reserve capacity to carry the overload.
- Sheathing–to–chord connections slipped to well beyond their design load range by the time system failure occurred, suggesting that partial composite action effective at design load may deteriorate as load increases.

References

ASTM. 1970. Standard methods for establishing structural grades and related allowable properties for visually graded lumber. ASTM D 245-70. West Conshohocken, PA: American Society for Testing and Materials.

NFPA. 1970. National design specification for wood construction. Washington, D.C.: National Forest & Paper Association.

Truss Plate Institute. 1985. Design specifications for metal plate connected wood trusses. TPI-85, TPI 583. Madison, WI: Truss Plate Institute.

Wolfe, R.W.; Percival, D.H.; Moody, R.C. 1986. Strength and stiffness of light-frame sloped trusses. FPL Res. Pap.

FPL–RP–471. Madison, WI: USDA Forest Service, Forest Products Laboratory.

Wolfe, R.W.; McCarthy, M. 1989. Structural performance of light-frame roof assemblies. I. Truss assemblies with high truss stiffness variability. FPL Res. Pap. FPL–RP–492. Madison, WI: USDA Forest Service, Forest Products Laboratory.

Wolfe, R.W.; LaBissoniere, T. 1991. Structural performance of light-frame roof assemblies. II. Conventional truss assemblies. FPL Res. Pap. FPL–RP–499. Madison, WI: USDA Forest Service, Forest Products Laboratory.