Efficient Hardwood Glued-Laminated Beams

Harvey B. Manbeck, John J. Janowiak, Paul R. Blankenhorn, Peter Labosky, Jr., Pennsylvania State University, USA
Russell C. Moody, Roland Hernandez, USDA Forest Products Laboratory, USA

Abstract

The results of four recent studies on the flexural and shear behavior of hardwood glulam beams manufactured with red oak, red maple and yellow poplar are summarized. Most beam cross sections were fabricated with lower-grade visually stress-rated lumber in the cores and with E-rated lumber in the outer 50% of the section. To evaluate wide-width beams made from narrower-width lumber, several test beams were fabricated with non-edge glued multiple-piece laminations. Beam strengths and stiffnesses were predicted by ASTM D 3737 procedures and verified by load testing in accordance with ASTM D 198. The results strongly suggest that hardwood glued-laminated beams with strength and stiffness, respectively, of 16.5 MPa (2400 psi) and 12.4 GPa (1.8 x 10^6 psi) are technically feasible. ASTM D 3737 procedures conservatively predicted the flexural and beam shear strengths and accurately predicted the stiffness of hardwood glulam beams. The volume effect on the flexural strength of hardwood glulam beams was satisfactorily characterized with the volume effect equation published in the NDS (AF&PA, 1991) and an exponent value of 0.10.

Keywords: Glulam, Hardwood, Strength, Stiffness, Volume effect, Flexure, Shear; Multiple-piece laminations.

Background

In 1996 the American Institute for Timber Construction (AITC) revised AITC 119-85 (AITC, 1985), "Standard Specifications for Hardwood Glued-laminated Timber" (AITC, 1996). This revision makes design and construction of hardwood glulam similar to softwood glulam design and construction (AITC 117-93). That is, hardwood glulam can now be designed and fabricated with lower grade (e.g., No. 2 or No. 3 visually-stress-rated (VSR)) lumber in the core 50% of a beam layup and with higher grade laminations (VSR or E-rated) in the outer 50%. Heretofore, laminations of high quality lumber were required throughout the entire hardwood glulam beam cross section (AF&PA, 1991). This paper summarizes the data and research conducted at the Pennsylvania State University, the USDA Forest Products Laboratory, and West Viginia University (Manbeck et al, 1993, 1994; Janowiak et al, 1995; Moody et al, 1993; Shedlauskas et al., 1996) which served as the basis for the AITC 119-96 revisions (AITC, 1996).

The design flexural strength of softwood glulam beams has been shown to be dependent upon beam volume (Moody et. al. 1990). The National Design Specification (NDS) has previously adopted Equation 1 to adjust flexural strength of glulam beams larger than the standard size (130 mm x 305 mm x 6.38 m (5.125 in. x 12 in. x 21 ft)) beam (NFPL 1991).

$$C_v = K_L (b_o/b)^x (d_o/d)^x (L_o/L)^x \quad (1)$$

where

C_v = volume factor (<1.0)
K_L = loading condition coefficient
b = beam width[mm(in.)]
d = beam depth [mm(in.)]
L = beam length for simply supported beam [m(ft)]
b_o = standard beam width [130 mm(5.125 in.)]
d_o = standard beam depth [305 mm(12 in..)]
L_o = standard beam length [6.38m (21 ft)]
x = dimensionless exponent (x = 0.05 for southern pine; 0.10 for other species)

The exponent x in Equation 1 was initially derived from test data on glulam beams fabricated with softwood species. Recent research by Manbeck et al (1993, 1994), Shedlauskas et al (1996), and Moody et al (1993) has shown that Equation 1 is also satisfactory for quantifying the volume effect of red maple, red oak and yellow poplar beams. This paper presents arguments for adopting Equation 1 for the volume effect for hardwood glulam beams and recommends the

value of the exponent for use with all hardwood glulam species.

Hardwood lumber in widths greater than 130 mm (5.125 in.) is prohibitively expensive for use in glulam beam construction. In many applications, such as longer span [greater than approximately 15.3m (50 ft)] glulam girder bridge construction wider beams are required for efficient design. One way to manufacture wider beams is to use staggered multiple-piece laminations using nominal 50 mm x 100 mm and 50 mm x 150 mm (2 x 4 and 2 x 6) lumber alternatively. The simplest way to fabricate the multiple-piece hardwood girders is to use non-glued edges. The revised AITC 119-96 document allows the use of the non-edge-glued multiple-piece laminations. This paper also summarizes the research of Janowiak, et al (1995) which served as the foundation for inclusion of the multiple-piece laminations in hardwood glulam beams.

General Methods

Manabeck et al (1993) and Moody et al. (1993), designed and load tested, using the methods outlined in ASTM D198 (ASTM 1995b), 45 red maple and 45 yellow poplar glulam beams with the lamination layups shown in Figures 1 and 3, respectively. Beam test configurations are summarized in Figure 2 and Table 1 The cross sections were designed using assumed knot and slope of grain characteristics and applying ASTM D3737 (ASTM 1995a) computation procedures. Target flexural strength and stiffness of the standard six [130 mm x 300 mm x 6.38 m (5.125 in. x 12 in. x 21 ft)] beam were 16.5 MPa (2400 psi) and 12.4 GPa (1.8 x 10^6 psi), respectively. E-rated lumber with the target characteristics given in Figures 1 or 3 was used in the outer 50% of the cross section; No 2 VSR lumber was used in the core. Knot data were collected for the laminating lumber used in the test beams; observed and predicted beam strengths and stiffnesses were compared. Fifteen beams of each size (Figures 1 and 3) were tested. Finally, the flexural strengths of the test beams were regressed against test beam volume, using Equation 1, to determine the exponent value, x of the best fit curve for the data for each species.

Shedlauskas et al. (1996) designed and load tested 30 red oak glulam beams with the lamination layups shown in Figure 4. Load tests were conducted using ASTM D198 (ASTM, 1995b) procedures and the configurations summarized in Figure 2 and Table 1. The cross sections were designed using assumed knot and slope of grain characteristics and ASTM D3737 (ASTM, 1995a) computation procedures with target strength and stiffness for a standard size beam of 16.5 MPa (2400 psi) and 12.4 GPa (1.8 x 10^6 psi, respectively. E-rated lumber with target characteristics given in Figure 4 were used in the outer 50% of the cross section No. 2 VSR lumber was used in the core. Knot data were collected for the laminating lumber used in the test beams; observed and predicted beam strengths and stiffnesses were compared. Eighteen of the 8-lam beams (small) and 12 of the 18-lam (large) beams were tested. The exponent in Equation 1, x, which best predicted the change in flexural strength between the large and small test beams was determined.

Janowiak et al., (1995) designed and load tested 15 red maple glulam beams with the lamination layups shown in Figure 5a. Load tests were conducted using ASTM D198 (ASTM, 1995a) procedures and the configuration summarized in Figure 2 and Table 1. The laminating lumber for these beams were all from cant-sawn materials. The sections were designed using assumed knot and slope of grain characteristics and ASTM D3737 (ASTM 1995a) computation procedures with target strength and stiffness of 16.5 MPa (2400 psi) and 12.4 GPa (1.8 x 10^6 psi), respectively. The outer 50% of the cross section had E-rated lumber with the characteristics shown in Figure 5a; No. 3 VSR lumber was used in the core. Knot data were collected and observed and predicted strength and stiffness were compared. The nominal beam size was 125 mm x 460 mm x 8.54 m (5 in. x 18in. x 28 ft). Equation 1 with an exponent value of 0.071 (Table 5) was used to normalize the measured flexural strength to a standard size beam. Measured and predicted flexural strength and stiffness were compared.

Janowiak et al. (1995) also load tested 15 multiple-piece red maple glulam beams with lamination layups shown in Figure 5b and nominal depth and width of 200 mm (8 in.) and 165 mm (6.5 in.), respectively. The beams were load tested in flexure, using ASTM D198 (ASTM, 1995b) procedures and the test configuration summarized in Figure 2 and Table 1, about both the x- and y- axes (Figure 5b) to measure the respective MOEs. Then the beams were loaded to failure about the y-axis to obtain the flexural strength about the y-axis. Knot data and slope of grain characteristics of the laminating lumber were documented. The respective observed and ASTM D3737 (ASTM, 1995a) predicted flexural strength and stiffness were compared.

Janowiak et al. (1995) also load tested 12 multiple-piece red maple glulam beams with lamination layups shown in Figure 5b and with nominal depth and width of 200 mm (8 in.) and 165 mm (6.5 in.), respectively, in shear. Beam shear tests were conducted using the five point loading scheme recommended by Soltis and Rammer (1994), Figure 6. Loading was applied in the y-y axis (Figure 5b) for all the beam shear tests, ASTM D3737 (ASTM, 1995a) predicted shear strengths were compared to shear strengths derived from the observed data.

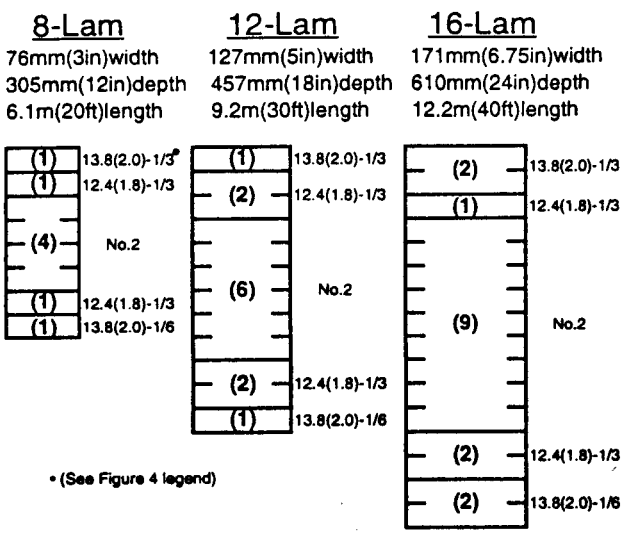

Figure 1. Red maple glulam test beam combinations (Manbeck et al., 1993)

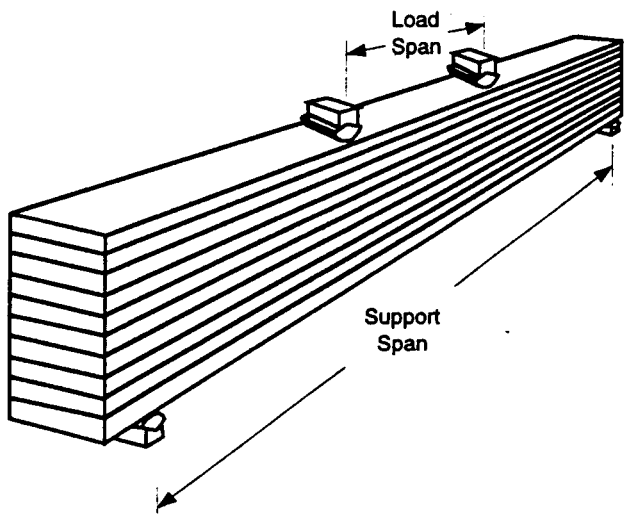

Figure 2. Loading configurations for bending tests.

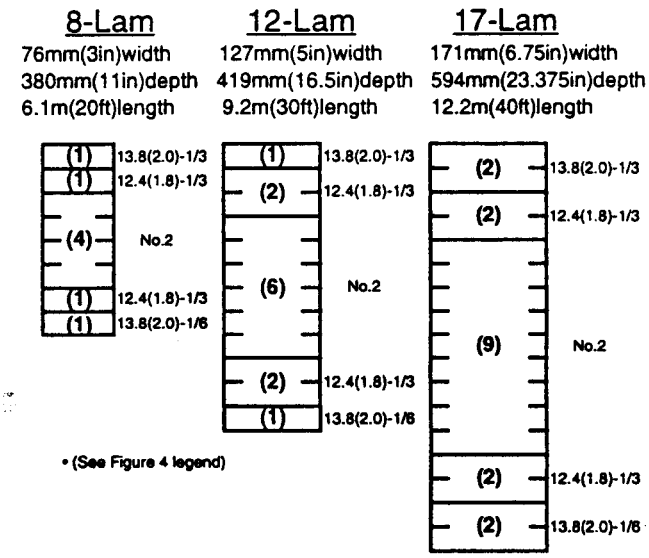

Figure 3. Yellow poplar glulam test beam combinations. (Moody et al., 1993).

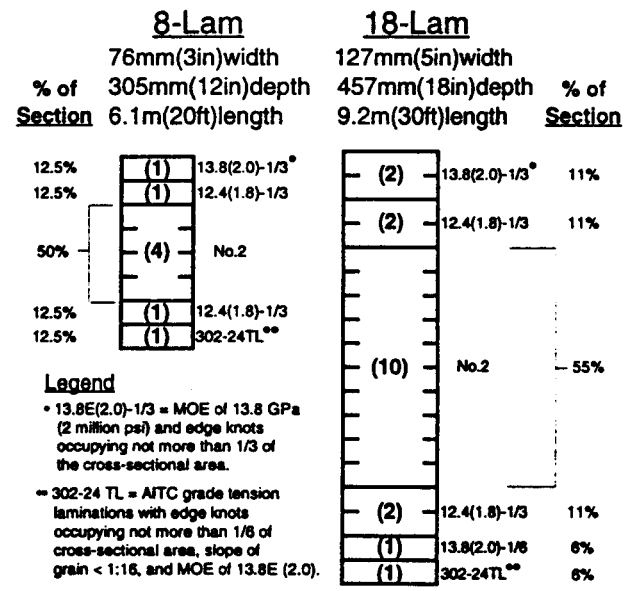

Figure 4. Red oak glulam test beam combinations (Shedlauskas et al., 1996)

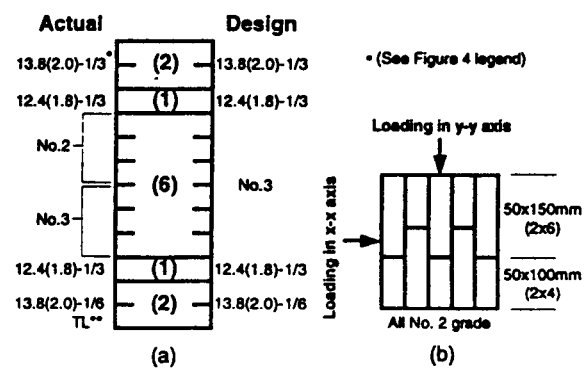

Figure 5. Red maple glulam test beam layups: (a) 24F-1.8E combination; (b) multiple-piece lamination combination (Janowiak, et al., 1995).

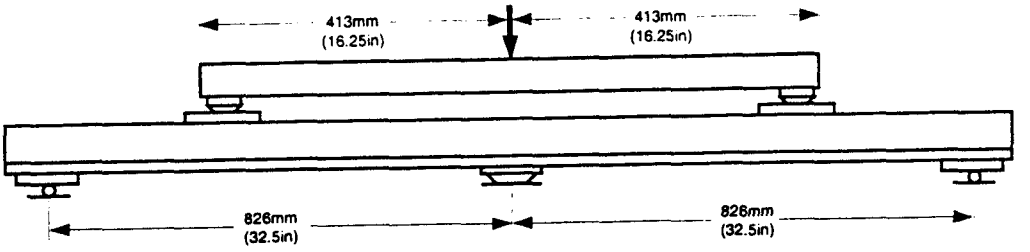

Figure 6. Loading configuration for shear tests of red maple multiple-piece layups. (Janowiak et al., 1995)

Summary Results

Table 2 summarizes the average modulus of rupture (MOR), the fifth percentile MOR at 75% tolerance, average modulus of elasticity (MOE), and the associated coefficients of variation (COV) for each group of hardwood glulam beams tested. Table 3 summerizes the average transverse shear strength (ultimate) and associated COV, the fifth percentile shear strength at 75% tolerance, and the adjusted (allowable) shear strength for the five point flexural beam shear tests for the multiple-piece lamination beams (Janowiak et al., 1995). Table 4 lists the ratio of the actual and predicted MORs for the several sizes of red maple and yellow poplar test beams in the studies by Manbeck et al. (1993; 1994) and Moody et al. (1993). Predicted ratios were calculated using Equation 1 with exponent values of 0.10 and 0.05. Observed ratios were computed for each specimen, as were the associated 90% confidence interval on the ratios for each beam group. Table 5 summarizes the volume effect exponents for the best fit of the observed flexural strength data for red maple, yellow poplar and red oak glulam beams. The red maple and yellow poplar exponents were computed by determining the best fit curve, following the form of Equation 1, to the test data. The exponent for red oak was determined by calculating the exponent value in Equation 1 which correctly predicted the difference in the MORs of the two test beam sizes. Table 6 summarizes the actual and predicted strength (allowable) for each test beam group for each of the four studies. The adjusted strengths and predicted strengths are normalized to a standard size beam [130 mm x 305 mm x 6.4 m (5.125 in. x 12 in. x 21 ft)] based on the volume-effect exponents in Table 5. Predicted values are based upon ASTM D 3737 (1995a) and the actual knot data for the test beam group. The table also lists the ratio of the actual adjusted strength to the predicted strength for each beam group. Table 7 summarizes the actual and ASTM D3737-predicted average MOEs for each test beam group for each of the four studies. The predicted values are based on the MOE properties of the laminating lumber for each beam group.

The COVs for the average MOR ranged from 10.0% to 18% for beams with single-piece laminations (Table 2). The COV for the MOR of the multiple-piece red maple test beams was 10.8% (Table 2); the COV for the ultimate shear strength about the y-y axis (Figure 5b) of the multiple-piece lamination beams was 7.4% (Table 3). The COVs of the test data are typical of those reported for softwood glulam beams.

The results in Table 4 suggest that the volume effect exponent, x, in Equation 1 lies somewkere between 0.10 and 0.05 for the flexural strength of both red maple and yellow poplar glulam beams. The predicted ratios using x = 0.10 or 0.05 fall within, or are very close to falling within the 90% confidence interval for each beam group. The results of the regression analysis for red maple and yellow poplar yielded volume effect exponents of 0.071 and 0.088, respectively (Table 5). The volume effect exponent value which best characterized the change in strength of the red oak test beams with volume was 0.075 (Table 5).

These values fall between the exponent values (0.05 and 0.10) recommended in the NDS for glulam beams (AF&PA, 1991). The close agreement in the exponent value between the three species, and the close agreement in the exponent value to the recommended value for all softwood species except southern pine, strongly suggests adoption of an exponent value of 0.10 for all hardwood species. A value of 0.10 would yield conservative volume effect reductions to flexural strength of hardwood glulam relative to available test results.

Both the actual and predicted allowable flexural strengths for the standard size beam of all the test beam groups, except for the predicted strength of the large red oak beams, exceeded the target strength of 16.5 MPa (2400 psi). The predicted allowable flexural strength of the large red oak beam group was 15.8 MPa (2300 psi); the slightly low [67 kpa (100 psi)] predicted strength is probably attributable to the small sample size for knot data collection. Indeed Shedlauskas et al. (1996) indicate that by pooling the knot data collected for the two beam size groups predicted allowable flexural strength exceeds 16.5 MPa (2400 psi). The actual strength of all the red maple and red oak beams or exceeded the predicted strength. The ratio of actual to predicted strengths ranged from 1.00 to 1.22 for these species. The actual strength of the medium and large size yellow poplar beams were very close to the predicted strength (within 5%). The greatest underprediction of strength (16%) was for the smallest yellow poplar beams (Moody et al., 1993). These results strongly suggest that it is feasible to design and

Table 1 - Flexure test load configurations.[1]

Test Series	Beam Group	Support Span m(ft)	Load Span m(ft)
Red Maple	8-Lam	5.8 (19)	1.2 (4)
(No. 2 Core)	12-Lam	8.7 (28.5)	1.8 (6)
	16-Lam	11.6 (38)	2.4 (8)
	8-Lam	5.8 (19)	1.2 (4)
Yellow Poplar	12-Lam	8.7 (28.5)	1.8 (6)
	17-Lam	11.6 (38)	2.4 (8)
	8-Lam (Small)	5.5 (18)	1.2 (4)
Red Oak	18-Lam (Large)	12.0 (39.5)	2.4 (8)
Red Maple	12-Lam (No. 3 core)	8.5 (28)	1.8 (6)
	5-Lam (Multiple-Piece Lam)	3.8 (12.5)	1.3 (4.2)

[1]See Figure 2.

Table 2 - Results for bending tests on hardwood glulam beams.[1]

Test Series	Beam Group	Sample Size	M.C. (%)	Avg MOR MPa (psi)	COV_{MOR} MPa (psi)	$MOR_{0.05}$[2] MPa (psi)	MOE GPa ($x10^6$ psi)	COV_E (%)
Red Maple	8-Lam	15	12	62.4 (9080)	14.4	46.5 (6760)	12.2 (1.78)	4.3
(Manbeck et	12-Lam	15	12	54.9 (7980)	12.1	42.8 (6230)	12.2 (1.77)	3.0
al., 1993)	16-Lam[3]	12	12	54.0 (7860)	15.8	38.7 (5630)	12.2 (1.78)	2.5
Yellow Poplar	8-Lam	15	8.2	55.4 (8060)	17.3	37.5 (5640)	13.0 (1.89)	4.4
(Moody et al.,	12-Lam	15	7.5	52.0 (7560)	16.1	37.4 (5440)	13.3 (1.94)	3.2
1993)	17-Lam	15	8.0	45.2 (6570)	18.0	31.1 (4530)	12.3 (1.79)	3.4
Red Oak	8-Lam	18	12.8	60.3 (8770)	16.1	43.6 (6340)	12.9 (1.88)	4.4
(Shedlauskas	18-Lam	12	11.1	45.8 (6670)	10.0	37.6 (5470)	12.8 (1.86)	3.3
et al., 1996)								
Red Maple	12-Lam	15	12.6	54.9 (7980)	12.1	42.8 (6230)	12.2 (1.77)	3.0
(Janowiak et	5-Lam	15	8.9	–	–	–	12.8 (1.86)	8.3
al., 1995)	5-Lam[4]	15	8.9	45.6 (6630)	10.8	36.6 (5320)	12.9 (1.87)	7.1

[1]For load applied perpendicular to wide face of laminations unless noted otherwise.
[2]Based on log normal distribution and 75% tolerance limit for $MOR_{0.05}$.
[3]Results based on 12 beams; three beams did not meet either tension lamination requirements or end joint spacing requirements.
[4]For load applied parallel to the wide face of the laminations (bending about the y-y axis).

Table 3 - Results of flexural shear tests for multiple piece lamination layups.[1]

Sample size	12
Moisture Content -%	8.9
Average Shear Strength (τ) - MPa (psi)	11.9 (1730)
COV of τ –%	7.4
$\tau_{0.05}$ at 75% tolerance - MPa (psi)	10.2 (1490)
$\tau_{adjusted}=\tau_{0.05}/4.1$ -MPa (psi)	2.5 (362)

[1]Based on log normal distribution of data

Table 4 - Ratio of mean MORs for red maple and yellow poplar glulam beams of several size beams and volume effect exponents.

Species (Study)	Beam Strength Comparison by Group	Ratio of Predicted Mean MORs x = 0.10	x= 0.05	Ratio of Actual Mean MORs and 90% C.I.
Red Maple (Manbeck et al., 1993)	12-Lam to 8-Lam	0.876	0.936	0.879 (0.810, 0.948)
	16-Lam to 8-Lam	0.803	0.896	0.864 (0.785, 0.943)
	16-Lam to 12-Lam	0.910	0.954	0.983 (0.909, 1.057)
Yellow Poplar (Moody et al., 1993)	12-Lam to 8-Lam	0.876	0.935	0.939 (0.841, 1.037)
	17-Lam to 8-Lam	0.798	0.893	0.815 (0.725, 0.905)
	17-Lam to 12-Lam	0.911	0.955	0.868 (0.772, 0.964)

Table 5 - Volume effect exponents, by species, for best fit of observed flexural strength data to equation 1.

Species	Study	Exponent, x
Red Maple	Manbeck et al. (1993)	0.071
Yellow Poplar	Moody et al. (1993)	0.088
Red Oak	Shedlauskas et al. (1996)	0.075

Table 6 - Hardwood glulam bending strength results adjusted to standard size beam [130 mm x 305 mm x 6.4 m (5.125 in. x 12 in. x 21 ft.)].

Species (Study)	Beam Group	Predicted Strength[1] MPa (psi)	Actual Strength[2] MPa (psi)	Actual to Predicted Strength Ratio
Red Maple (Manbeck et al., 1993)	8-Lam	19.7 (2860)	21.2 (3080)	1.08
	12-Lam	20.4 (2960)	21.4 (3120)	1.05
	16-Lam	20.6 (3000)	20.6 (3000)	1.00
Yellow Poplar (Moody et al., 1993)	8-Lam	20.6 (3000)	17.3 (2520)	0.84
	12-Lam	17.9 (2600)	18.8 (2730)	1.05
	17-Lam	17.9 (2600)	17.0 (2470)	0.95
Red Oak (Shedlauskas et al., 1996)	Small (8-Lam)	17.8 (2580)	19.5 (2820)	1.09
	Large (18-Lam)	15.8 (2300)	19.4 (2810)	1.22
Red Maple (Janowiak et al., 1995)	12-Lam (No. 3 core)	19.2 (2800)	21.0 (3060)	1.09
	5-Lam (Multiple-piece)	9.0 (1310)	16.1 (2340)	1.79

[1]Predicted strength based on actual knot data and MOE properties of lamination lumber and ASTM D3737.
[2]Based on log normal distribution of data ($MOR_{0.05}/2.1 \times C_v$)

Table 7 - Comparison of actual and predicted bending stiffness results for hardwood glulam.

Species (Study)	Beam Group	Predicted MOE (P)[1] GPa (x10^6 psi)	Actual MOE (A) GPa (x10^6 psi)	Ratio of A/P
Red Maple (Manbeck et al., 1993)	8-Lam	12.2 (1.78)	12.2 (1.78)	1.00
	12-Lam	11.9 (1.73)	12.1 (1.77)	1.02
	16-Lam	11.9 (1.74)	12.2 (1.78)	1.02
Yellow Poplar (Moody et al., 1993)	8-Lam	12.5 (1.83)	13.0 (1.89)	1.03
	12-Lam	12.9 (1.88)	13.3 (1.94)	1.03
	17-Lam	12.3 (1.80)	12.3 (1.79)	0.99
Red Oak (Shedlauskas et al., 1996)	Small (8-Lam)	11.9 (1.74)	12.9 (1.88)	1.08
	Large (18-Lam)	12.1 (1.77)	12.7(1.86)	1.05
Red Maple (Janowiak et al., 1995)	12-Lam (No 3 core)	12.7 (1.85)	12.2 (1.77)	0.96
	5-Lam (MOE_x)	11.9 (1.74)	12.7 (1.86)	1.07
	5-Lam (MOE_y)	12.0 (1.75)	12.8 (1.87)	1.07

[1]Predicted based on actual MOE properties of lamination lumber and ASTM D3737.

fabricate hardwood glulam beams with lower grade VSR lumber (No. 2 or 3) in the cores and E-mted lumber in the outer laminations and still achieve or exceed target allowable flexural strengths of 16.5 MPa (2400 psi). The data also suggest that ASTM D 3737 procedures adequately, and in most cases conservatively, predict the allowable flexural strength of hardwood glulam beams.

The actual and predicted MOEs of all the test beam groups for all the studies agreed to within 8% with most groups agreeing to within 5%. Also, the actual MOEs of all test groups equaled or exceeded the target MOE of 12.4 GPa (1.8 x 10^6 psi). These results strongly suggest that efficient hardwood glulam beam laminations layups with MOEs of at least 12.4 GPa (1.8 x 10^6 psi) can be designed and fabricated in hardwood species. Also, the results provide strong evidence that ASTM D 3737 procedures accurately predict the flexural stiffness of hardwood glulam beams.

The average shear strength of the red maple multiple-piece beams for y-y axis test orientation (Figure 5b) was 11.9 MPa (1730 psi) with a COV of only 7.4% (strength about the y-y axis, Table 3). Applying the general use adjustment factor to the fifth percentile shear strength yields an allowable beam shear strength of 2.5 MPa (362 psi). This value greatly exceeds the published shear strength of multiple-piece lamination layups predicted by ASTM D 3737 procedures [770 kPa (111 psi)] and published in AITC 119-96 [450 kPa (65 psi)]. Also, the design flexural strength of the multiple-piece lamination test beams about the y-y axis greatly exceeded (by 79%) the ASTM D 3737 predicted strength and that published in AITC 119-96. The MOEs of the multiple-piece test beams about both the x-x and y-y axes (Figure 5b) exceeded (by 7%) the MOE predicted by ASTM D 3737 and that published in AITC 119-96. These results are strong evidence that ASTM D 3737 procedures can be used to conservatively establish the allowable flexural strength and stiffness and the allowable shear strength of hardwood glulam beams manufactured with non-edge-glued multiple-piece laminations.

Closure

The study results summarized in this paper suggest the following general conclusions about hardwood glulam beams:

1. Efficient hardwood glulam beams, manufactured with lower-grade core laminations and higher-grade E-rated laminations in the outer 50% of the cross section, and with allowable strength and stiffness of 16.5 MPa (2400 psi) and 12.4 GPa (1.8 x 10^6 psi) are technically feasible and practical.

2. ASTM D 3737 procedures conservatively predict the allowable flexural strengths of hardwood glulam beams.

3. ASTM D 3737 procedures accurately (within 5% in most cases) predict the MOEs of hardwood glulam beams.

4. Equation 1 with a volume effect coefficient of 0.10 conservatively predicts the reduction in the flexural strength of hardwood glulam beams as beam volume increases.

5. The flexural strength and stiffness, as well as the beam shear strength of non-edge-glued multiple-piece lamination hardwood glulam beams equal or exceed the respective values predicted by ASTM D 3737 procedures.

References

AF&PA. 1991. National design specification for wood construction. Washington, D.C.: AF&PA. American Forest and Paper Products Association.

AITC. 1993. Standard specifications for structural glued laminated timber of softwood species. AITC 117-93-Manufacturing. Englewood, CO: AITC. American Institute of Timber Construction.

_____. 1985. Standard specifications for hardwood glued laminated timber. AITC 119-85. Englewood, CO: AITC. American Institute of Timber Construction.

_____. 1996. Standard specifications for hardwood glued laminated timber. AITC 119-96 (Rev.) Englewood, Co: AITC. American Institute of Timber Construction.

ASTM. 1995a. Standard method for establishing stresses for structural glued laminated timber. ASTM D3737-92. Philadelphia, PA: American Society for Testing and Materials.

_____. 1995b. Static tests of timbers in structural sizes. ASTM D 198-84. Philadelphia, PA: American Society for Testing and Materials.

Janowiak, J. J.; Manbeck, H. B.; Hernandez, R.; Moody, R. C.; Blankenhorn, P. R.; Labosky, Jr., P. 1995. Efficient utilization of red maple in glued-laminated timber beams. FPL-RP-541. Madison, WI: USDA-FS. USDA Forest Products Laboratory.

Manbeck, H. B.; Janowiak, J. J.; Blankenhorn, P. R.; Labosky, Jr. P.; Moody, R. C.; Hernandez. R. 1993. Red maple glulam timber beam performance. FPL-RP-519. Madison, WI: USDA-FS, USDA Forest Products Laboratory.

_____. 1994. Performance of red maple glued-laminated timber beams. Transactions of the ASAE 37(2):611-615.

Moody, R. C.; Falk, R.; Williamson, T. 1990. Strength of glulam beams--volume effects. In Vol. 1, October. Proceedings of the 1990 International Timber Engineering Conference, 176-182. Tokyo, Japan.

Moody, R. C.; Hernandez, R., Davalos, J.; Sonti, S. 1993. Yellow poplar glulam timber beam performance. FPL-RP-520. Madison, WI: USDA-FS, USDA Forest Products Laboratory.

Shedlauskas, J. P.; Manbeck, H. B.; Janowiak, J. J.; Hernandez, R.; Moody, R. C.; Labosky, Jr., P.; Blankenhorn, P. R. 1996. Efficient use of red oak for glued-laminated beams. Transactions of the ASAE 39(1):203-209.

Soltis, L. A.; Rammer, D. R. 1994. Shear strength of unchecked glued-laminated beams. Forest Products Journal. 44(1):51-57.

Acknowledgments

Funding for the research reported herein was sponsored and funded by the Pennsylvania Department of Transportation (Project SS-043), the Federal Highway Administration, the Pennsylvania Agricultural Experiment Station, and the USDA-Forest Products Laboratory.

In: Gopu, Vijaya K.A., ed. Proceedings of the international wood engineering conference; 1996 October 28-31; New Orleans, LA. Baton Rouge, LA: Louisiana State University: Vol. 1: 283-290