Wood Science and Technology 29 (1995) 287-293 Springer-Verlag 1995

Effect of varying dimensions on tapered end-notched flexure shear specimen

D. E. Kretschmann

Summary An effort is underway by the International Union of Testing and Research Laboratories for Materials and Structures (RILEM) Technical Committee 133, Fracture of Timber, to investigate options for a standardized test method to establish Mode II fracture mechanics properties in wood. In this study, varying size and thickness effects on the performance of the RILEM proposed tapered end-notched flexture (TENF) shear specimen were studied. Three sizes and thicknesses of Sitka spruce (Picea *sitchensis)* specimens with a tangential-longitudinal orientation and density between 400 and 500 kg/m^3 were tested. For the range of dimensions investigated, no evidence was found of a size or thickness effect on fracture energy.

Introduction

In 1991, the International Union of Testing and Research Laboratories for Materials and Structures Technical Committee 133 (RILEM TC-133), Fracture of Timber, was formed. One objective of this committee is to propose standard test methods to determine fracture mechanics properties. A second objective is to produce fracture mechanics methods to analyze the strength of beams containing a hole or a notch. A beneficial byproduct of this effort has been a state-of-the-art document outlining the work to date on the fracture toughness of wood (Valentin et al. 1991).

Since its inception, techniques have been studied by RILEM TC 133 that apply to both Mode I and Mode II fracture toughness testing (Larsen, H. J. and Gustafsson, P. J. 1989; RILEM TC 133 1992; Kretschmann et al. 1991; Kretschmann and Green 1992). For Mode I (opening mode failure), the committee agreed to a three-point bending test method on notched beams (Larsen and Gustafsson 1989). This method has gone through round robin testing with satisfactory results. In contrast to Mode I testing, standardized Mode II (forward shear mode) testing is much more difficult to obtain.

The most difficult part of conducting Mode II testing has been the production of a stable crack growth. After investigating and experimenting with several different type specimens, the current specimen (Racois, P. and Valentin, G. H. 1994) was derived from the end-notched flexure beam tested in three-point bending. This specimen is called the tapered end-notched flexure (TENF) specimen (Fig. 1). The new feature of this specimen is a varying beam height giving nearly constant Mode II values with respect to crack length. Therefore, a stable crack propagation can be observed. Finite element computations have shown that friction between the crack sides can be neglected, and

Received 30 September 1993

D. E. Kretschmann
USDA Forest Service, Forest Products Laboratory
One Gifford Pinchot Drive, Madison, Wisconsin 53705-2398

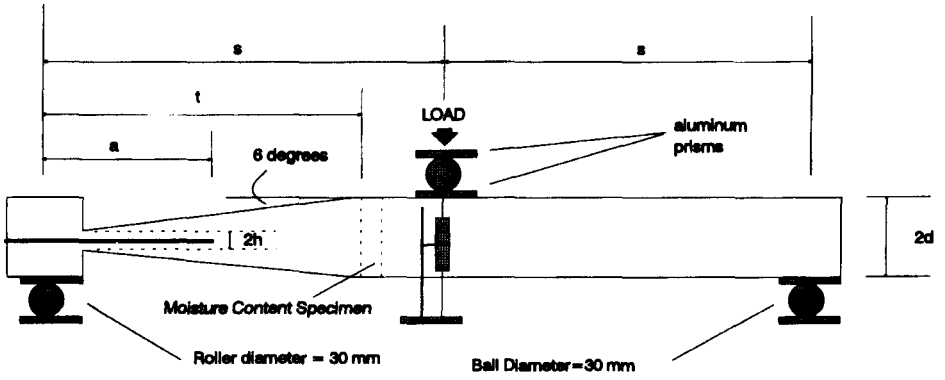

Fig. 1. TENF specimen ($s = 220$ mm, $2d = 50$ mm, $t = 160$ mm, $2h = 20$ mm, and $b = 200$ mm)

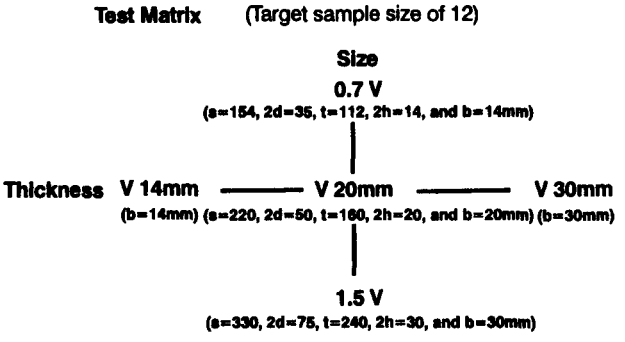

Fig. 2. Test matrix

Mode II appears to be constant with respect to crack length (between 70 and 160 mm) for crack propagation along the grain.

The U.S. Department of Agriculture, Forest Service, Forest products Laboratory (FPL), was asked by RILEM TC-133 to participate in a series of tests on the Mode II fracture specimen TENF. The objective of this study was to evaluate the effect of varying dimensions (size and thickness) on the performance of the proposed TENF shear specimen. Two variants were made: all dimensions were multiplied by 0.7 or 1.5 and only the thickness was changed by a factor of 0.7 or 1.5. The test matrix was a cross design with three sizes (0.7, 1.0, and 1.5 times Racois and Valentin dimensions and identified as 0.7V, V20 mm, and 1.5V) and three thicknesses (14, 20, and 30 mm and identified as V14 mm, V20 mm, and V30 mm) (Fig. 2). This paper summarizes the results of this study, which were reported in detail at the May 16–17, 1994, meeting of RILEM TC-133 at the Technical Research Center, Espoo, Finland.

Material and methods

Material

Twelve 75-mm by 150-mm by 3.7-m Sitka Spruce (*Picea sitchensis*) planks with a tangential-longitudinal (TL) orientation and density between 400 and 500 kg/m^3 were obtained from the FPL inventory. From these planks, two to four 75- by 150- by 900-mm clear sections were obtained.

Conditioning

Clear sections were placed in the 25°C 65% relative humidity room and checked periodically until their weight had stabilized. When the clear sections equilibrated, they were ready for machining.

Machining

The first step in the machining process was to cut the clear sections into boards of the appropriate 30-, 20-, and 14-mm thickness. Two boards were machined from each short section. One board was machined to a thickness of 30 mm and the other 20 mm. On each of these boards, templates were used to mark out the test specimens (Fig. 3). When marked, the 20-mm board was cut in half. One of these two boards was then planed to a thickness of 14 mm. Next, the boards were cut into specimen blanks with the appropriate length and width. The taper was cut into each specimen blank using a router against a pattern. The radius left by the router was removed by hand with a wood chisel. Finally, the 1.5-mm-wide notch with chevron was machined into each specimen by using a 45° platform and a band saw.

Testing

Setup – Specimens were tested in a universal test machine that applied a load at a constant cross-head displacement rate. The test arrangement is shown in Fig. 4. Measurements of applied load and load point displacement were recorded continuously during the loading and unloading phases. A video record was maintained of the crack zone on both sides of the specimen for each test. The specimen was tested with a head speed of 2 mm/min to obtain a maximum load within 1 to 4 min. A crack was initiated just before testing with a razor blade. Teflon strips were inserted without force into the notch. The sum of thickness of the teflon strips was slightly less than the width of the notch. Each beam was unloaded before the crack length reached the position t (see Fig. 1) at a rate of 2 mm/min. Load-deflection plots, critical load p_{max}, density, and moisture content were obtained and recorded for each test specimen. Critical load p_{max} was the load at the beginning of the load displacement plateau (Fig. 5).

Crack Length – The initial crack length was easily measured. The final crack length was measured in two ways. First, parallel lines were drawn every 5 mm perpendicular to the

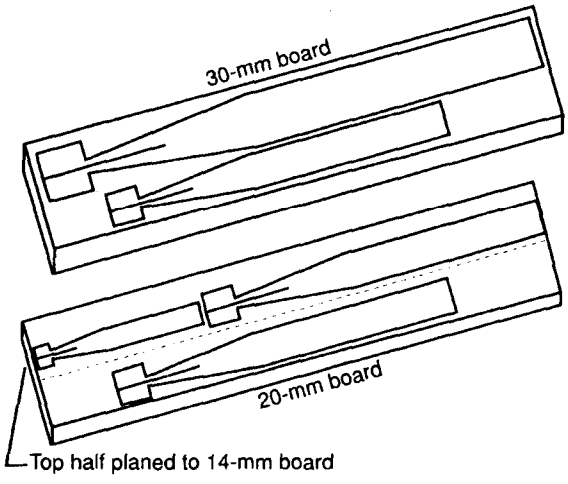

Fig. 3. Specimen cut-out pattern

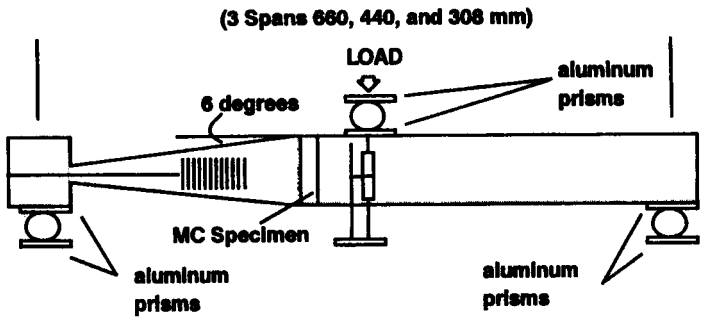

Fig. 4. Test set-up

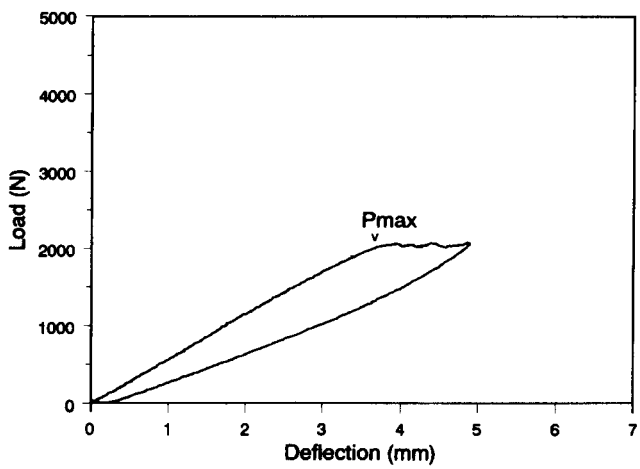

Fig. 5. Determination of p_{max}

crack path on each side of the specimen (Fig. 4). With the aid of video equipment, displacements of the grids were observed and a pencil mark was made at the actual crack tip on the specimen. Final crack length was the average length of the two side-length measurements. Second, final length of the propagated crack in Mode II was estimated by breaking the specimen in two after testing. The difference in surface appearance between Mode II and Mode I under direct light and low angle observation was used to determine the final location of the crack front.

Calculation – Density was calculated using the ovendry weight and volume of a small section near the notch (Fig. 4). A trapezoidal rule was used to calculate the area under the load displacement curve from the load displacement data. Fracture energy G_{IIf} was then calculated using the following equation:

$$G_{IIf} = U/(b(a_f - a_o)$$

where

U is the area under the complete load displacement curve,
b is the thickness of the specimen, and
a_f and a_o are the final and initial crack length, respectively.
The critical stress intensity factor for Mode II (K_{IIc}) was calculated for the V20 mm

specimens using the Y (a/d) curve supplied for the standard dimensions (Racois and Valentin 1994). This resulted in

$$K_{IIc} = 0.8 \times p_{max}$$

Results and discussion

The mean and coefficient of variation (COV) regarding moisture content, density, p_{max}, G_{IIf}, and median G_{IIf} for each specimen type tested are given in Table 1. The overall average moisture content was 12.3%, density was 437 kg/m^3, and G_{IIf} for all specimens tested was 1.281 N m/m2. The average K_{IIc} for the twelve V20 mm specimens was 1.646 MN$^{-3/2}$.

Size

The proposed TENF specimens produced a relatively stable crack growth. All load-deflection plots for V20 mm are shown in Fig. 6. Box plots showing minimum,

Table 1. Data summary for five types of specimens

Specimen type	N	Mean[a]				Median
		Moisture content (%)	Density (kg/m^3)	p_{max} (N)	G_{IIf} (N m/m^2)	G_{IIf} (N m/m^2)
0.7V	10	12.2 (1.97)	440 (2.65)	1.122 (6.78)	1.369 (30.43)	1.188
V14 mm	12	12.3 (1.99)	435 (3.73)	1.459 (9.98)	1.221 (16.87)	1.222
V20 mm	12	12.3 (2.01)	436 (3.79)	2.057 (6.62)	1.263 (22.93)	1.127
V30 mm	11	12.2 (2.79)	438 (3.45)	3.193 (8.79)	1.206 (16.67)	1.215
1.5 V	12	12.5 (2.02)	438 (3.17)	4.022 (5.34)	1.353 (19.45)	1.350

[a] Numbers in parentheses are coefficients of variation.

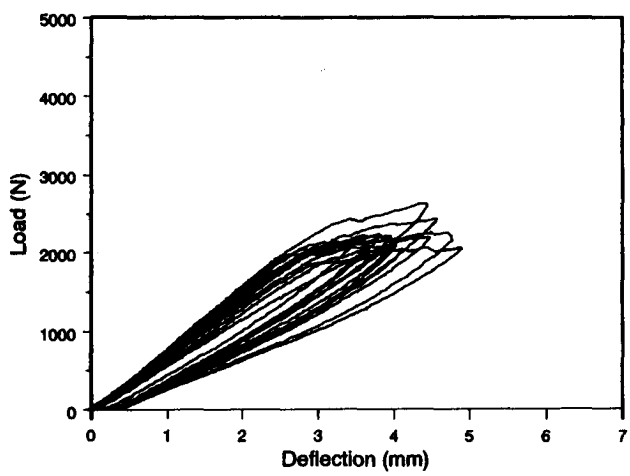

Fig. 6. Comparison of load and deflection for V20 mm (n = 12)

median, mean, and maximum values for the three sizes tested are shown in Fig. 7. From the box plots, it is evident that G_{III} results are skewed for 0.7V and V20 mm. Therefore, the median for each group was used for statistical comparison. No statistical difference was detected between medians. The p value for this comparison was 0.11.

Thickness

Load-deflection for V30 mm is shown in Fig. 8. The minimum, median, mean, and maximum values for the three thicknesses tested are shown in Fig. 9. No statistical difference was detected between medians. The p value for this comparison was 0.69.

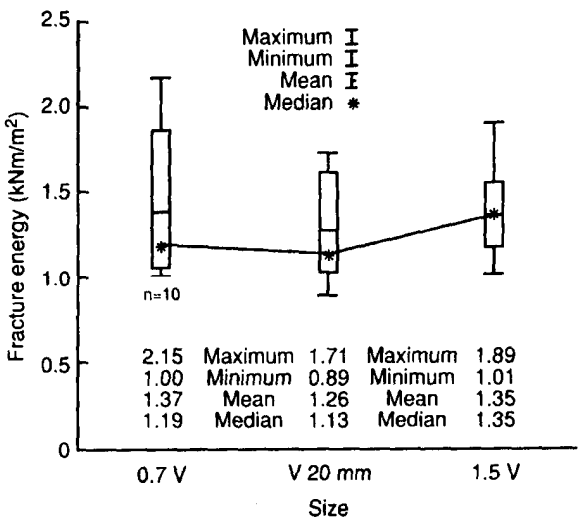

Fig. 7. Minimum, median, mean, and maximum fracture energy values for 0.7V, V20 mm, and 1.5V

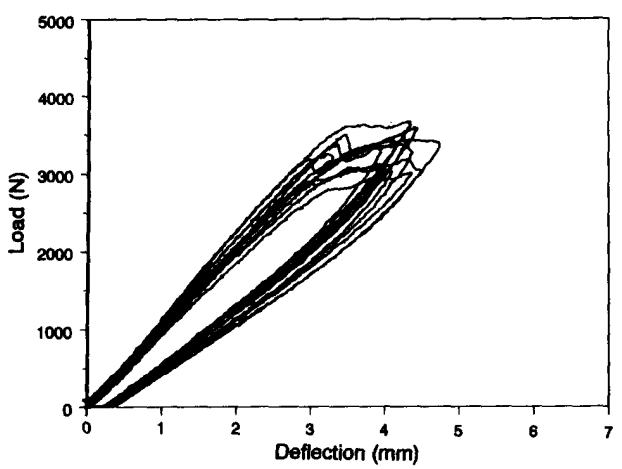

Fig. 8. Comparison of load and deflection for V30 mm (n = 12)

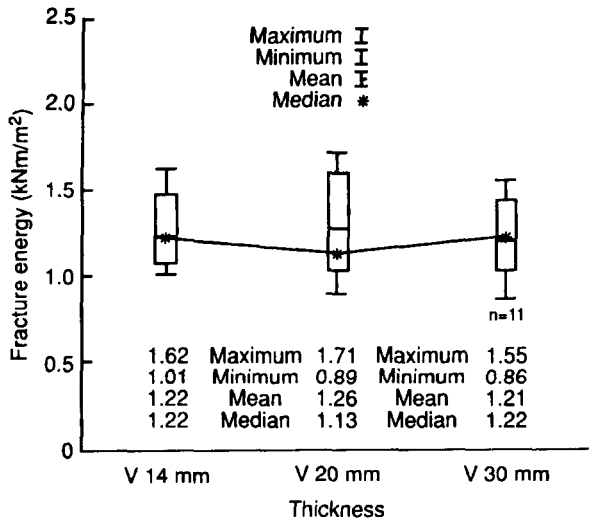

Fig. 9. Minimum, median, mean, and maximum fracture energy values for 0.7V, V20 mm, and 1.5V

Density

For all five types of specimens tested, fracture energy G_{III} seems to be insensitive to variations in density and there is no significant linear relationship. In all cases, critical load p_{max} shows a positive correlation with density. With the exception of thickness, specimens with standard dimensions (V14 mm, V20 mm, and V30 mm) resulted in a significant linear relationship between p_{max} and density.

Conclusion

For the range of density, size, and thickness of specimens investigated in this study, no evidence was found of a size or thickness effect on fracture energy. In addition, a strong correlation did not exist between fracture energy and density, but a positive correlation was shown between critical load and density.

References

Kretschmann, David E.; Green, David W.; Malinauskus, Vyto. 1991: Effect of moisture content on stress intensity factors in Southern Pine. Proc. 1991 Inter. Timber Eng. Conf.; 1991 September 2–5; London: TRADA: 3.391–3.398. Vol. 3

Kretschmann, David E.; Green, David W. 1992: Center-split beam as a method for determining Mode II Fracture Properties. Prepared for presentation at RILEM fracture mechanics workshop: "Determination of fracture properties of wood;" 1992 April 7; Bordeaux, France

Larsen, H. J.; Gustafsson, P. J. 1989: Design of unnotched beams. Paper 28. CIB-W18 Meeting; Berlin, GDR: 729–742

Racois, P.; Valentin, G. H. 1994: Proposal of shear specimen for determination of fracture mechanics properties in wood. (Second draft dated 15-01-94.) L.R.B.B., Bordeaux, France

RILEM TC 133. 1992: Workshop on determination of fracture properties of wood especially in Mode II and mixed Mode I and II. RILEM TC 133 Meeting; 1992 April 7–8; Bordeaux, France

Valentin, G.H.; Bostrom, L.; Gustafsson, P.J.; Ranta-Maunus, A.; Gowda S. 1991: Application of fracture mechanics to timber structures. RILEM state-of-the-art report. Technical Research Centre of Finland Research Notes 1262

PRINTED WITH SOY INK
on recycled paper