Bryan H. River[1] *and E. Arnold Okkonen*[1]

Contoured Wood Double Cantilever Beam Specimen for Adhesive Joint Fracture Tests

REFERENCE: River, B. H. and Okkonen, E. A., **"Contoured Wood Double Cantilever Beam Specimen for Adhesive Joint Fracture Tests,"** *Journal of Testing and Evaluation*, JTEVA, Vol. 21, No. 1, January 1993, pp. 21–28.

ABSTRACT: The strain energy release rate and associated parameters are useful measures of adhesive band quality. A properly contoured double cantilever beam specimen excels in measuring these properties. However, previous specimen designs presented experimental difficulties resulting in possible bias and poor reproducibility. A new composite specimen is described that overcomes these problems. The specimen is made of oriented strandbaard (OSB) and has a concave taper; two contoured beams sandwich a wood laminate having the test bondline at its center. Unlike previous specimen designs, this new specimen allows bonding of the test joint under normal conditions and produces a linear relationship between specimen compliance and crack length. These changes improve the accuracy and reproducibility of the test results with adhesively bonded wood joints. This report describes how the new specimen was developed and how to experimentally determine the compliance and crack-length relationship used to calculate the strain energy release rate of an adhesive joint. Furthermore, the reproducibility of two sets of specimens and the use of the method to analyze differences in actual joint quality are shown and discussed.

KEYWORDS: fracture toughness, wood, adhesive, contoured double cantilever beam (CDCB)

The contoured double cantilever beam (CDCB) specimen loaded in cleavage (Mode I) is a powerful and recognized test method (ASTM D 3433, Test Method for Fracture Strength in Cleavage of Adhesives in Bonded Joints) for evaluating adhesively bonded metal joints. At the Forest Products Laboratory (FPL), we adapted this method to evaluate adhesively bonded wood joints [*1–5*] and continually strive to improve the test specimen. This report describes the latest test specimen that is easier to use and provides more consistent and accurate results in comparison with those of previous versions.

For several reasons, a fracture toughness test is preferred to conventional shear and tension test methods such as ASTM D 897, D 905, D 906, Test Method for Tensile Properties of Adhesive Bonds, Test Method for Strength Properties of Adhesive Bonds in Shear by Compression Loading, and Test Method for Strength Properties of Adhesives in Plywood Type Construction in Shear by Tension Loading, respectively. First, the CDCB specimen tested in cleavage approximates the cleavage stresses that develop in laminated assemblies exposed to shrinkage in service. This is important because a properly designed joint seldom fails as a result of shear or tension stresses created by external loads, hut fails from the internal stresses caused by swelling and shrinking of the bonded member.

Second. a properly designed CDCB specimen loaded in cleavage can yield information about an adhesively bonded joint that is not available with conventional test specimens. Conventional specimens typically fail catastrophically in the wood at some unknown critical stress level, not at the average stress level that is measured by those tests. Furthermore, the stress concentration that precipitates the catastrophic failure in conventional test specimens develops at an unnatural flaw created in manufacturing the specimen. It does not replicate the stress concentration caused by a sharp, natural flaw. The flaw that precipitates fracture in the CDCB specimen is a sharp, natural flaw created by the arrest of a growing crack.

Third, the CDCB specimen test yields more information about the adhesive layer and joint. Three principal types of behavior can be measured: crack initiation energy, crack growth rate stability, and crack arrest energy. The CDCB test can also be adapted to measure the actual stress concentration that precipitated failure, although this is seldom done. For theoretical and experimental reasons, it is more common to measure the strain energy release rate of the growing crack, or expressed another way, the energy required to create a new surface. The CDCB test specimen also provides a measure of the energy level at which the crack ceases to grow or is arrested. These two measurements can then be used to calculate a measure of the crack growth rate stability. The latter measure indicates whether the crack grows catastrophically or in a stable. slow-tearing manner.

Finally, a single, well-designed CDCB specimen of sufficient length will yield repeated observations of the crack initiation energy, thus providing a measure of uniformity of the adhesive joint,

The crack initiation energy or strain energy release rate (G_{Ic}) of the adhesive bond under plane strain conditions is calculated from the force required to separate the two beams and the compliance of the beams

$$G_{Ic} = \frac{P_c^2}{2b}\frac{dC}{da} \tag{1}$$

Manuscript received 2/18/92; accepted for publication 5/18/92.

[1] Forest products technologist and physical science technician, respectively, USDA Forest Service, Forest Products Laboratory, Madison, WI 53705–2398.

The Forest Products Laboratory is maintained in cooperation with the University of Wisconsin. This article was written and prepared by U.S. government employees on official time, and is therefore in the public domain and not subject to copyright.

where

G_{Ic} = strain energy release rate.
P_c = load at crack growth initiation.
b = width of the beam,
dC = change in compliance (C = load displacement/load) and
da = change in crack length (a).

Plane strain conditions are presumed to exist in the present test specimen by the occurrence of a flat fracture (in the plane of the adhesive layer) and by the absence of slant fracture (diagonally through the plane of the adhesive layer) [6].

According to elastic beam theory, the compliance or stiffness of a cantilever beam is related to the crack length (length of the beams) by

$$\frac{dC}{da} = \frac{8}{Eb}\left[\frac{3a^2}{h^3} + \frac{1}{h^2}\right] \tag{2}$$

where

E = modulus of elasticity and
h = beam height.

As the elastic modulus and specimen width are constants, *dC/da* will be constant provided the term inside the brackets is constant for any crack length. This term describes the contour or taper of the beam. The significance of a constant *dC/da* is that only the fracture or crack initiation load is needed to calculate G_{Ic} using Eq 1. Given this condition, crack lengths do not need to be measured at each crack tip position, a tedious and difficult task. Finally, since the crack initiates and arrests many times, it is possible to determine the crack arrest energy (G_{Ia}). This is the amount of energy still stored in the specimen when the crack ceases to grow. It is calculated by substituting the load at crack arrest (P_a) for the load at crack initiation in Eq 1. Other common test specimens are not able to measure this property of a bonded joint.

Previously, two types of contoured specimens for wood bonding adhesives were developed and used at the FPL: a tapered specimen of two solid wood beams bonded together and a composite specimen of contoured aluminum beams and a wood laminate (Fig. 1). These specimens produced useful results [*1,2*] hut presented several difficulties in fabrication and testing. First, a special tapered jig is necessary to apply pressure evenly to the tapered wood beams during hot pressing. Second, during hot pressing, the wood beams dry and shrink, lowering the bonding pressure during cure. Third, the *dC/da* value needed to calculate the crack initiation energy varies with the natural variability of the wood modulus of elasticity.

Substitution of aluminum for the contoured part of the specimen reduces variability from the variable mechanical properties of wood. Furthermore, the test adhesive forming the thin wood laminate can be cured in a conventional hot or cold press. In spite of these improvements, the composite aluminum-wood specimen also has several disadvantages. The compliance and crack-length relationship is only linear for approximately the first 90 mm of crack length. After allowing for nontypical behavior at the start of the crack, useful data are attained from only 40 or 50 mm of the bondline. A longer linear relationship between compliance and crack length, and thus a longer useful crack length, is desirable. The contoured aluminum beams are expensive to fabricate and must be chemically etched to prepare them for bonding. After testing. the specimen must be heated to soften the adhesive and remove the wood laminate. The old adhesive must be scraped and wiped off before the aluminum beam can be reused Occasionally. the aluminum must be re-etched to review its bondability. These procedures are time consuming and expensive.

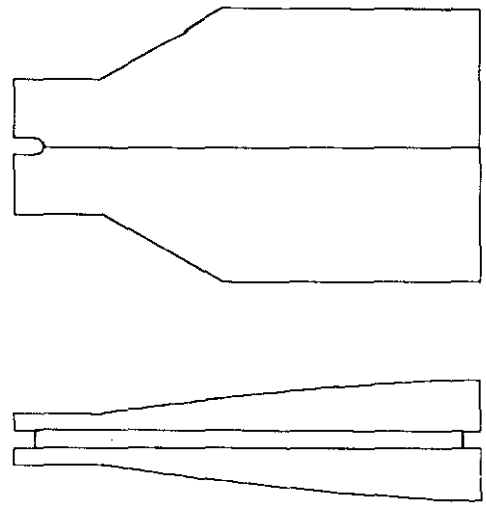

FIG. 1— *Specimen of bonded solid wood witgh the fiber angle oriented to the bondline (top); composite alumination-wood specimen with flour angle oriented in the wood test laminate (bottom).*

We felt the disadvantages of the previously described specimens could be overcome if the contoured beams could be made from wood or a wood-based material and still produce a long. linear compliance and crack-length relationship. Wood-based beams can be easily and inexpensively contoured with conventional woodworking tools. The wood test laminates would bond easily to them without special surface preparation. Time and money would be saved after testing because the wood test laminate could be quickly removed by sawing, and the contoured beams would be ready for reuse without further preparation.

Objectives and Approach

A study was conducted to develop an improved CDCB specimen. The objective of the study was to design a contoured beam of wood or a wood-based material with approximately the same compliance characteristics as the wood test laminate. This new beam would produce a linear compliance and crack-length relationship and numerous measurements.

The approach was to experimentally determine the compliance and crack-length relationship of various straight-tapered beams made of wood or wood-based materials and, if necessary, to alter the shape to achieve the longest possible linear relationship between compliance and crack length.

Materials

Douglas-fir (*Pseudotsuga menziesii*) marine plywood, a siding-type hardboard (mixed hardwood fiber), particleboard (*Pinus spp.*), aspen (*Populus spp.*), oriented strandboard (OSB), and hard maple (*Acer saccharum*) lumber were used for testing the contoured beam designs. The plywood, particleboard, and maple lumber were nominal 13 mm thick; the hardboard was 11 mm

thick, and the OSB was 16 mm thick. The test laminate was yellow birch (*Betula alleghaniensis*) bonded with phenol-resorcinol formaldehyde resin adhesive. A room-temperature curing epoxy (WEST System, Gougeon Brothers, Bay City, Michigan)[2] adhesive was used to bond the test laminate to the contoured beams.

Methods

Specimen Preparation

All wood materials were conditioned to approximately 8% equilibrium moisture content (EMC) in a room controlled at 23°C (74°F) and 43% relative humidity. Specimens were prepared in solid and composite form.

Solid Specimen—Solidspecimens were prepared in various contours, lengths, and heights by sawing them directly from the raw panel. The specimen height included an extra 13 mm to allow for the addition of the test laminate in the composite specimen (Fig. 2). This was provided to maintain the overall height and contour of the solid specimen in the matching composite specimen. Two 6.35-mm holes were drilled 13 mm from the end of the specimen and 25 mm on either side of the centerline and used for attaching the test specimen to the test machine. A 13- by 19-mm notch wits cut in the end of the specimen centered (in the centerline. The notch was used to mount a gage fur measuring the load-point displacement during testing.

Test Laminate – A panel was prepared by laminating two 6.5- by 51- by 305-mm pieces of yellow birch. The pieces were cut from hoards that were carefully selected fur grain direction and prepared to control the angle of the fibers to the bonding surface at either 5° or 20° (Fig. 2). The surface was prepared fur bonding by knife planing with the grain to prevent chipping. Each pair was bonded so their fiber angles converged at the bondline in a "V" shape.

These 13-mm-thick panels were ripped into either 13- or 16-mm-wide laminate strips. A laminate strip bonded between two contoured beams forms a composite beam specimen.

Composite Beams – After determining the proper beam contour, pairs of these composite beams were cut from each material (plywood, particleboard, OSB) in the shape of the solid specimen. Then, 13 mm of material (Fig. 2) was removed from the center to make space for the 13-mm-high laminate strip. This formed a matched beam pair from a solid specimen. Each beam pair was bonded to a laminate strip with the epoxy adhesive cured at room temperature fur 24 h under minimal pressure. The finished specimens were reconditioned to 8% EMC after fabrication.

When bonding the laminate strip between the contoured beams. the laminate was oriented with the "V" of the fiber angles pointing away from the loaded end of the specimen (Fig. 2). The purpose of fiber alignment in this type of fracture test is to force the crack to propagate in or near the laminate bondline during testing. rather than towards the laminate-beam interface [*1*]. The test laminate was made shorter than the contoured beams to leave a notch at the loading end of the completed specimen for the displacement gage mentioned previously.

[2] The use of trade or firm names in this publication is for reader information and dues not imply endorsement by the U.S. Department of Agriculture of any product or service.

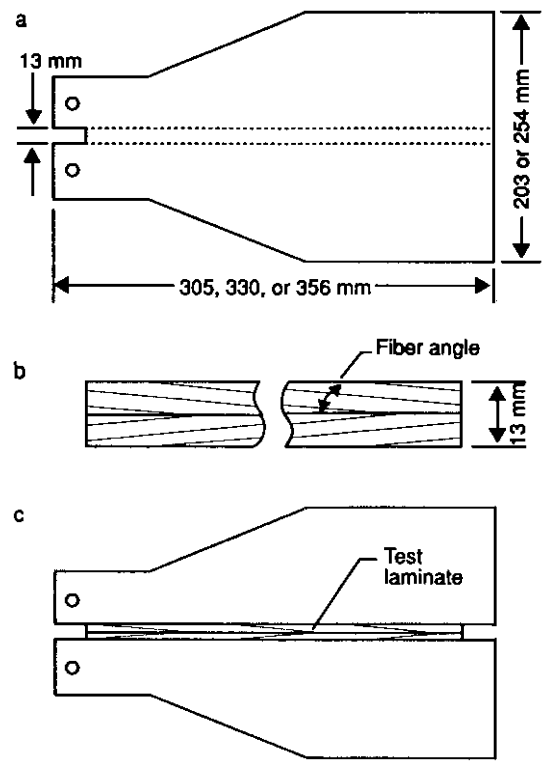

FIG. 2—(a) *Solid specimen;* (b) *test laminate with oriented fiber angle;* (c) *composite specimen.*

The solid and composite specimens were made in 305-, 330-, and 356-mm lengths and 203- and 254-mm widths (heights).

Compliance Calibration Procedure

When the taper described in Eq 2 becomes small (that is, when the beam is deep and stiff), the assumptions of beam theory underlying the use of Eq 2 for calculating *dC/da* become invalid [*7*]. In this case, an experimental *dC/da* should be derived from compliance and crack-length calibrations [*7*]. We used the following compliance calibration procedure based on the procedure described by Mostovoy and Ripling and others [*7,8*] to develop the CDCB specimen used in the present study.

Solid Specimens – To begin, saw a 50-mm slot along the centerline of the beam with a thin bandsaw blade, starting from the end at which the load is applied. Attach the specimen by the loading holes (Fig. 2) to the clevis grips of a Universal Testing Machine and a gage to measure the load-point displacement (D) in the notch between the load points. Apply a tensile load (*P*) through constant crosshead displacement rate. Upon reaching 200 N, decrease the load at the same rate to zero. Record the load-displacement relationship during loading and unloading on an *X-Y* recorder or by other means. After unloading, remove the specimen from the testing machine and extend the simulated crack 10 mm by sawing. Repeat this load-displacement measurement and crack-extension procedure until the simulated crack reaches 200 mm from the loading point. Calculate compliance (*C*) at each simulated crack length using $C = D/P$, and plot compliance and the simulated (sawn) crack length. The worksheet for a typical compliance and crack-length calibration test and the resulting *dC/da* is shown in Fig. 3.

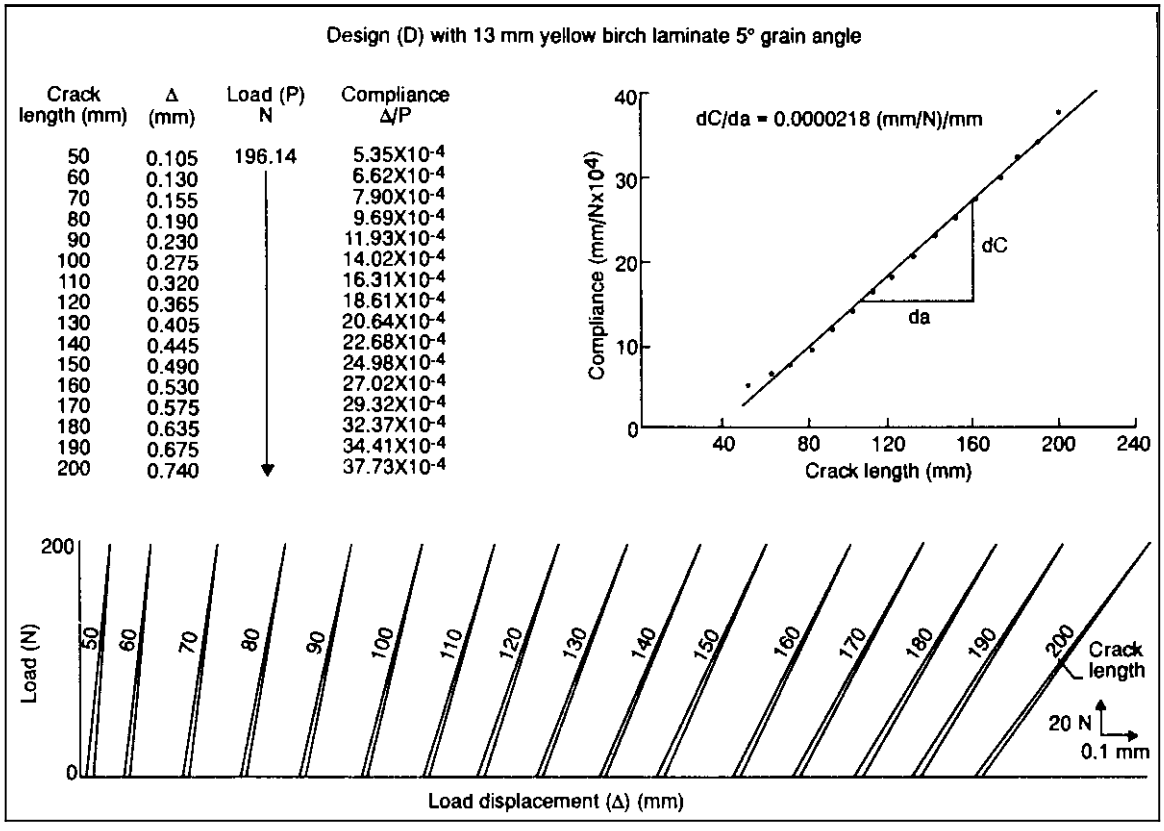

FIG. 3— *Worksheet for compliance and crack-length calibrations series and determination of dC/da.*

If the compliance and crack-length relationship is fairly linear, fit the data to a linear regression equation to determine *dC/da* (the slope of the compliance and crack-length relationship). If the compliance and crack-length relationship is curved, slightly alter the shape of the beam in an attempt to linearize *dC/da.* If the relationship is erratic, discontinue testing of that design.

When the relationship of a particular solid beam design is linear over all or almost all the sawn crack range from 50 to 200 mm, continue investigation of that design in composite form.

Composite Specimens – The procedure for composite specimens is the same as that for the solid specimens. except saw the simulated crack in the bondline of a test laminate located in the center of the specimen.

Results and Discussion

Straight-Tapered Beam

Following the procedures previously outlined, we examined the compliance and crack-length relationships of more than 70 specimens made in ten separate designs from five different wood or wood-based materials. In the initial stages, one or two specimens of each specimen geometry and material combination were tested. As the design was improved, we increased the number of tests, until in the final design, eleven specimens were tested.

The compliance and crack-length relationships of some straight-tapered beam designs (Fig. 4) were initially linear, but then curved upward at longer crack lengths (Fig. 5, curve B). This indicated that compliance was increasing at an accelerated rate as the crack extended beyond 120 mm. Data from some of the straight-tapered beams were very erratic, neither linear nor uniformly curved (Fig. 5, curve C). OSB in the 356-mm-length beam gave the best results (Fig. 5, curve A). In general. the initial tests of straight-tapered beam geometries were unacceptable. However. these tests suggested that the OSB specimens performed better than the other materials tested. Therefore. all subsequent work was performed using OSB specimens.

Curved-Tapered Beams

In subsequent tests. we used curved-tapered beam designs in an attempt to linearize *dC/da.* We began with a convex-tapered contour (Fig. 6). The standard specimen described in ASTM D 3433 uses a convex contour, but we found the convex contour accelerated *dC/da.*

The acceleration of *dC/da* at longer crack lengths was caused either by a hinging action described by Mostovoy and Ripling

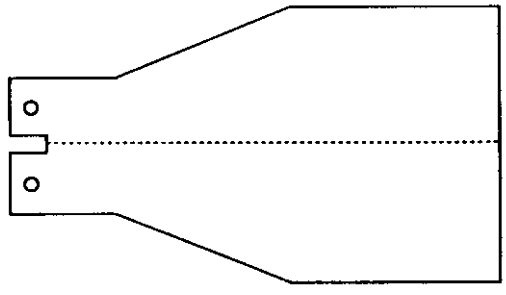

FIG. 4—*Straight-tapered double cantilever beam specimen*

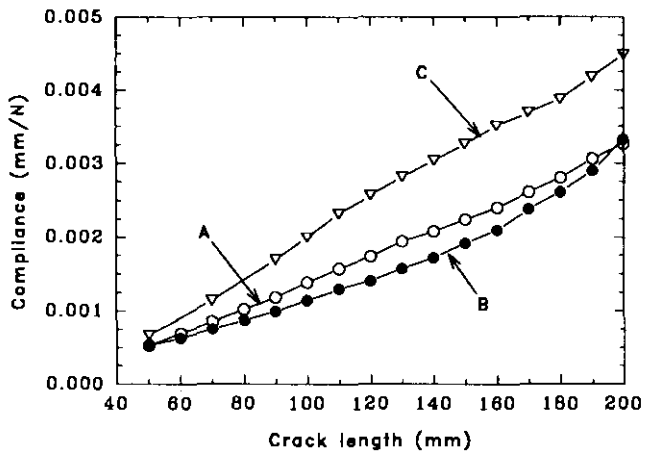

FIG. 5—*Various types of nonlinear or erratic compliance and crack-length relationships of (A) straight-tapered OSB, (B) sold hard maple lumber, and (C) Douglas-fir plywood.*

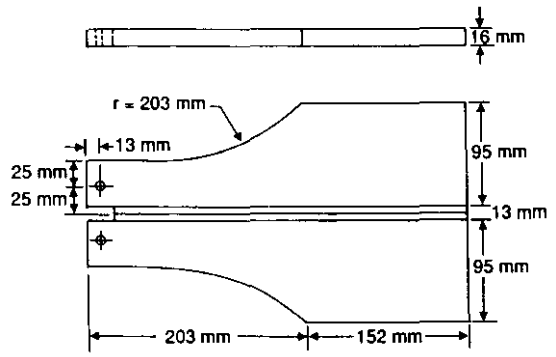

FIG. 7—*Composite specimen formed of concave-contoured OSB beams and a 5° fiber angle yellow birch test laminate.*

and others [*7,8*] or possibly by increasing shear at longer crack lengths. We lengthened the specimen to minimize the hinge action. but we were still unsatisfied with the result. The next improvement came with a change from a convex to a concave contour (Fig. 6). The first concave-contour design turned the *dC/da* relationship downward. We manipulated the shape and length of the concave contour and finally achieved a linear compliance and crack-length relationship over the range of 60 to 200 mm of bondline measured from the loading point. The resulting concave-tapered design was selected for further testing as a composite beam specimen (Fig. 7).

Effect of Test Laminate

The introduction of the test laminate between the contoured beams to form the composite beam specimen can change the *dC/da.* A theoretical stress analysis of the composite aluminum-wood specimen [*3*] revealed that the *dC/da* can be predicted; however, the laminate height and the ratio of the beam-to-laminate moduli have significant effects on *dC/da.* When the contoured beams have a much higher elastic modulus than does the test laminate, for example, aluminum compared to wood, *dC/da* is relatively insensitive to variation in the laminate [*3*]. In this case, the relatively massive and high-modulus aluminum beams reduced the compliance variability contributed by the wood. and the load-displacement data were well-behaved. The wood or wood-based contoured beams and the wood laminate used in the present study have approximately the same modulus. In this case, *dC/da* will be more sensitive to variation in the properties of the laminate [*3*].

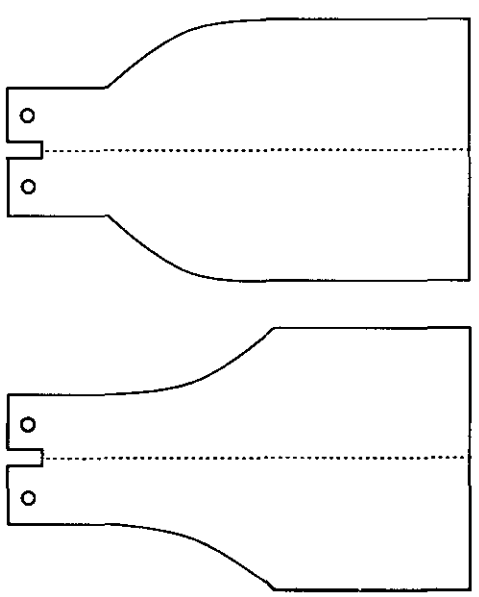

FIG. 6—*Convex-tapered specimen (top); concave-tapered specimen (bottom).*

Major causes of variation in laminate modulus are species (density) and fiber angle. In this study, species was constant, and unusually low- or high-density hoards were eliminated so that variation from those sources was minimized. In contrast, since we purposefully created laminates with other than a 0° fiber angle, it was important to understand fiber angle effect on *dC/da.*

Increasing the fiber angle in the laminate progressively decrease5 the modulus of the laminate in tension parallel to the bending axis according to the Hankinson relationship [*9*]. To test this effect, a solid OSB beam of the design selected was prepared and calibrated for compliance and crack length. Then, the 13-mm strip was sawn from the center to provide space for a 13-mm-high laminate strip. Two 5° and two 20° laminate strips were bonded successively between the initial pair of contoured beams. In each case, the two laminate strips of the same fiber angle were cut from the same laminate, and both the 5° and the 20° panels were made from billets cut from the same board.

The effect of introducing these laminates on the specimen *dC/da* is shown in Fig. 8. The triangles, representing the specimen with the 20° laminate strips, are colinear with the behavior of the original solid specimen. The squares and diamonds, representing the specimen with the 5° laminate strips, show a reduction in *dC/da* caused by introducing the 5° laminate. The insertion of a 5° test laminate decreased *dC/da* in the composite specimen, but the addition of a 20° laminate had no effect. The modulus of the 20° laminate was about the same as that of the OSB (approximately 4550 MPa). Therefore, the 20° laminate almost perfectly substituted for the portion of the solid specimen that was cut away to make room for the laminate strip in the composite specimen. In contrast. the modulus of the 5° laminate was about 12 500 MPa, much stiffer than the portion of the OSB

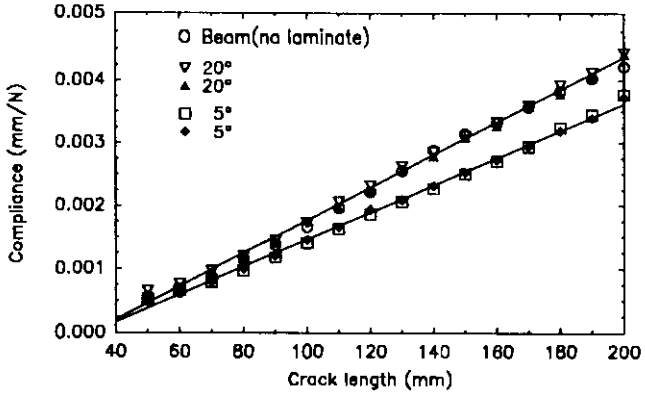

FIG. 8—*The effect of fiber angle variation in the laminate strip upon the compliance and crack-length relationship (dC/da) of the concave-contoured double cantilever beam specimen shown in Fig. 6.*

removed. Consequently. the composite specimen with the 5° laminate was much stiffer and had a lower *dC/da.*

The compliance and crack-length relationship was fairly linear over the range of crack length from 70 mm to about 190 or 200 mm with either type of laminate. However, the relationship varied in magnitude as a result of variation in the modulus of the laminate with grain angle. This reinforces the need for compliance and crack-length calibration. It also emphasizes the need to control the laminate fiber angle to achieve the highest degree of precision. Although a maple laminate strip with a 20° fiber angle has the experimental advantage of closely approximating the modulus of the OSB. a 5° grain angle more closely matches the properties of most adhesively bonded joints and is therefore preferable.

Precision of Compliance and Crack-Length Relationship

It is important to make trial specimens and conduct actual compliance calibrations to determine the compliance and crack-length relationship (*dC/da*). Once a linear *dC/da* has been achieved over the desired crack length, then a set of solid specimens having the chosen geometry should be prepared. More specimens than actually needed should be made in case some do not perform as expected. Each solid-wood specimen should be calibrated for *dC/da* and crack length. Solid specimens whose *dC/da* and crack behavior is outside the desired tolerance should be discarded. Next, compliance calibrations should be run with each beam pair using test laminates as nearly uniform as possible in species, density, and grain angle as the specimens whose bonds will be tested later. After this series of tests, either an average *dC/da* can be calculated to use for all specimens in the set or individual values of *dC/da* can be used for each beam pair. This judgment should be made on the basis of the variability.

An example of the performance of the specimen we chose (Fig. 7) is shown in Fig. 9. Two sets of specimens (six beam pairs in the first set and five in the second set) were cut from the same OSB panel. The 5° laminate strips were cut from several panels, hut all panels were made from the same yellow birch board.

The fitted linear regression equation from the first set of specimens was Y = 0.000019X - 0.000528, where Y is compliance, Xis crack length, and the slope is *dC/da; R* value is 0.995. The regression equation from the second set of specimens is Y = 0.000019X - 0.000524; R value is 0.996. This specimen had a linear *dC/da* extending from 50 to 190 mm or more of crack

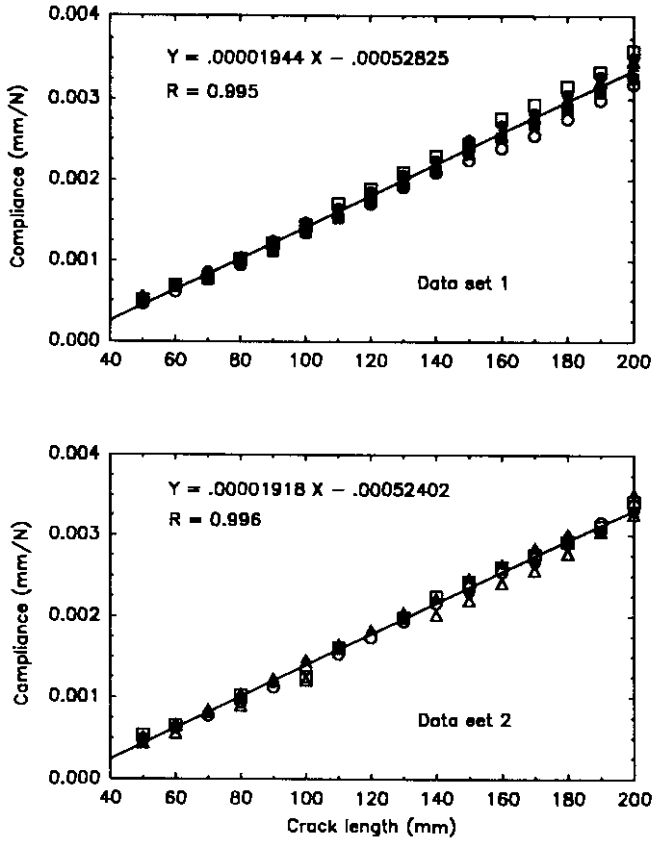

FIG. 9—*Compliance and crack-length calibrations and dC/da for two sets of concave-contoured double cantilever beam specimens.*

length. Comparison of the individual specimen results. the two data sets, and the fitted equations show that *dC/da* of the specimen was quite reproducible. As previously discussed, the specimen provides the desired linear compliance and crack-length relationship and thus a constant *dC/da* over a long crack length. The behavior is reproducible from specimen to specimen. If different materials are substituted. the relationship may change hut the shape of the wood-based beams can be easily varied to correct for the substitutions.

Once a suitable design is developed, compliance calibration and careful control of density, fiber angle, and height of the test laminates are necessary. The effect of variation of the height and modulus of the laminate upon the *dC/da* of a specimen with beams of a constant modulus is shown in Fig. 10. If laminate height is constant and the modulus of the laminate varies by ± 10% (± 400 MPa), then the *dC/da* of the composite specimen varies by about ± 2.8% (Fig. 10). If the modulus of the laminate is constant and the height varies by ± 4% (± 0.25 mm), *dC/da* varies by ± 1.4%.

In actual fracture tests of bonded joints, stringent control of variables. such as laminate density, height, and fiber angle, increases the sensitivity of the test to the effects of adhesive and bonding variables, which is the goal of the test method. The next section gives examples of the types of fracture behavior and variation that can be detected.

Fracture Toughness Tests

In addition to the properties G_{Ic} and G_{Ia}, a CDCB specimen, such as described in this report, provides a measure [*2*] called the brittleness index I:

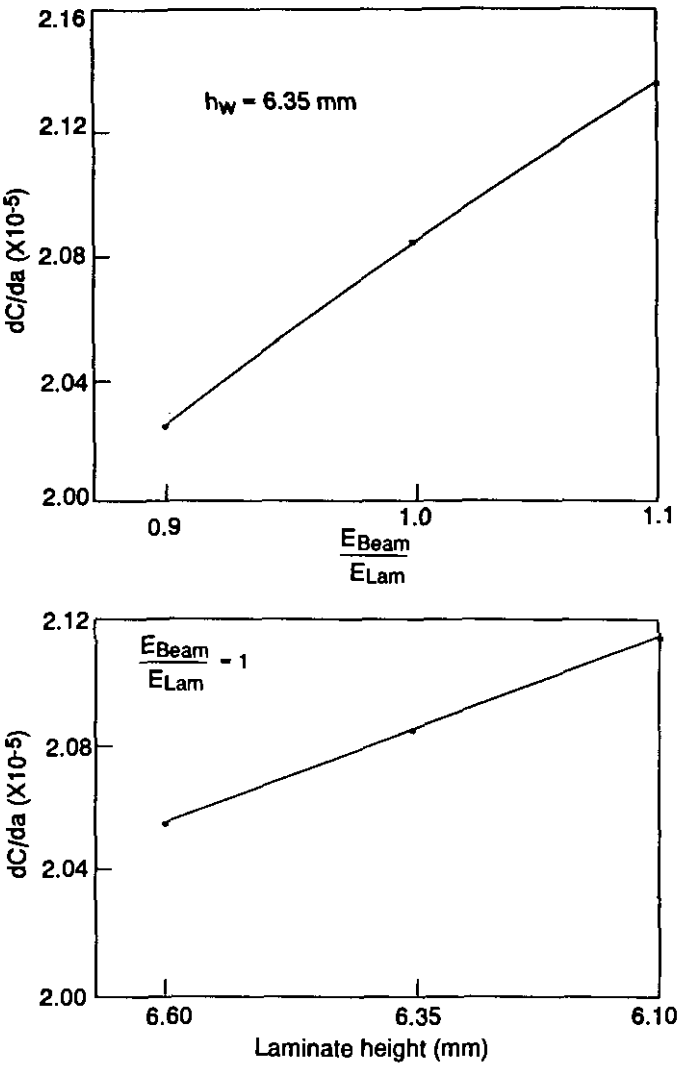

FIG. 10—*Variation of dC/da caused by ± 10% variation in laminate modulus (laminate height constant) (top), caused by a ± 4% variation in laminate height (modulus constatt) (bottom). curves calculated from Eq 8 in Ref 3.*

$$I = \frac{G_{Ic} - G_{Ia}}{G_{Ic}}$$

where

G_{Ic} = crack initiation energy and
G_{Ia} = crack arrest energy.

The I value is the ratio of energy lost during crack growth lo energy required to initiate crack growth. Large I values indicate catastrophic. unstable crack growth that is independent of the rate of loading. Small I values indicate slow tearing or growth in small increments with the rate dependent on the rate of loading.

Based on the measurements of G_{Ic} and G_{Ia}. a study on the effects of polyamine modification of urea-formaldehyde resin adhesives [*4*] exhibited several types of behavior: strong/moderately unstable, moderately strong/stable, and weak/stable (Fig. 11).

Strong/Moderately Unstable – A common behavior of wood joints bonded with strong crosslinked adhesives is a very high

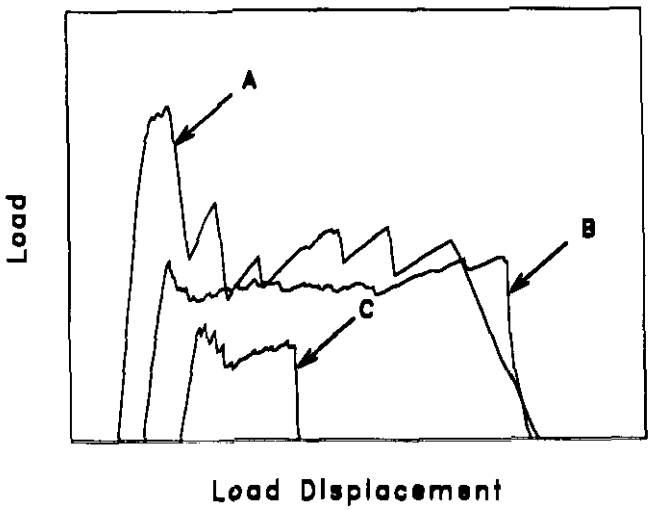

FIG. 11—*Examples of wood joint behavior: (A) strong/moderately unstable; (B) moderately strong/stable; and (C) weak/stable.*

crack initiation energy, hut a relatively low crack arrest energy (Fig. 11). The G_{Ic} of this joint was 416 J/m^2; I = 0.43. The fracture toughness of this joint was relatively insensitive to the rate of loading. In this case, failure was relatively catastrophic. Microscopic examination revealed that the crack tended to remain very near the interface. pulling little wood cell wall material. Penetration was slight. and the abrupt change of material properties between the wood and the adhesive provided a stress concentration that acted as a zipper once crack growth initiated.

Moderately Strong/Stable – Ideally a joint will have a high G_{Ic} and a high G_{Ia} (Fig. 11) for a modified adhesive. The G_{Ic} of this joint was 243 J/m^2, I = 0.06. The fracture toughness of such an adhesive was insensitive to the rate of loading and unlikely to fail catastrophically. Microscopic examination revealed tearing of wood cells on the surfaces of specimens exhibiting these fracture characteristics.

Weak/Stable – An improperly made joint, damaged wood surface, or degraded adhesive may fail in a stable manner but at a low strain energy release rate (Fig. 11). The G,, of this joint was only 120 J/m^2; I = 0.14. Either the adhesive or the wood cracked before the application of external forces. In the example shown, the adhesive layer was extensively cracked by shrinkage stress that developed during cure. These pre-existing cracks allow the crack front to advance in small increments without the buildup of a significant amount of stored energy in the specimen, thus producing crack growth in small increments at low energy levels.

Conclusions

(1) The wood-based contoured composite double cantilever beam specimen is less expensive and easier to prepare than the previously used solid wood or the composite aluminum-wood specimens. Bonding conditions of the test bondline can be controlled more positively in the wood laminate used in the composite specimen than in the solid wood specimen.

(2) Based on the criteria that a longer linear *dC/da* is better, the concave-tapered design is superior to previous solid wood or composite aluminum-wood designs and to the straight-tapered or convex-tapered composite wood designs tested in this study.

(3) Among the materials investigated, 16-mm OSB gave better test results in terms of length and linearity of *dC/da* than did

plywood, particleboard. hardboard, or solid wood, although each material performed satisfactorily in some designs.

(4) The 13-mm-high, 5° yellow birch laminate decreases *dC/da* compared to the solid concave-tapered beam specimen but does not destroy its linearity.

(5) The compliance and crack-length relationship (*dC/da*) of new beams must be determined by the calibration, but these beams may be used repeatedly without recalibration if the density, grain angle. and height of the test laminate are carefully controlled.

(6) An average *dC/da* can be used for a group of contoured beam pairs if care is taken in their preparation and selection and in the preparation of the test laminate.

(7) The concave-tapered double cantilever beam specimen and the fracture toughness test method provide measures of crack arrest energy and crack growth stability not obtained from conventional test methods.

References

[*1*] Ebewele, R. O., River, B. H., and Koutsky, J. A., "Tapered Double Cantilever Beam Fracture Test of Phenolic-Wood Adhesive Joints, Part I." *Wood Fiber,* Vol. 11, No. 3, 1979. pp. 197–213.

[*2*] Ebewele. R. O., River, B. H., and Koutsky, J. A., "Relationship Between Phenolic Chemistry and Adhesive Joint Performance: Effect of Filler Type on Fracture Energy," *Journal of Applied Polymer* Science, Vol. 31, 1986, pp. 2275–2302.

[*3*] Scott, C. T., River, B. H., and Koutsky. J. A,, "Fracture Testing Wood Adhesives with Composite Cantilever Beams," *Journal of Testing and Evaluation,* Vol. 20, No. 4. July 1992. pp. 259–264.

[*4*] River. B. H.. Ebewele, R. O., and Myers. G. E., "Failure Mechanisms in Wood Joints Bonded with Urea-Formaldehyde Adhesives." prepared for publication in *Holz als Roh und Werkstoff.*

[*5*] River, B. H., Scott, C. T., and Koutsky, J. A., "Adhesive Joint Fracture During Setting and Aging," *Forest Products Journal,* Vol. 39, Nos. 11 and 12, 1989, pp. 23–28.

[*6*] Hertzberg, R. W., *Deformation and Fracture Mechanics of Engineering Materials,* John Wiley and Sons, New York, 1976.

[*7*] Ripling, E. J., Mostovy, S., and Corten, H. T., "Fracture Mechanics: A Tool for Evaluating Structural Adhesives." *Journal of Adhesion,* Vol. 3, 1971, pp. 107–123.

[*8*] Mostovoy, S., Crosley, P. B., and Ripling, E. J., "Use of Crack-Line-Loaded Specimens for Measuring Plane-Strain Fracture Toughness." *Journal of Materials,* Vol. 2, No. 3, 1967, pp. 661–681.

[*9*] U.S. Department of Agriculture. *Wood Handbook: Wood as an Engineering Material,* Forest Service. Forest Products Laboratory. Madison, WI, 1987.

Printed on recycled paper