INVESTIGATION OF FUNDAMENTALS OF TWO-STAGE, DILUTE SULFURIC ACID HYDROLYSIS OF WOOD

John I. Zerbe, Program Manager
and
Andrew J. Baker, Chemical Engineer
Energy Research, Development, and Application Program
Forest Products Laboratory
Madison, Wisconsin 53705

ABSTRACT

A fundamental analysis of production of ethanol from southern red oak (Quercus falcata) resulted in recommendations for a process that is technically ready for commercial exploitation, but some equipment testing and evaluation are necessary first. Such evaluation is the objective of pilot testing now underway at the National Fertilizer Development Laboratory of the Tennessee Valley Authority. Data for hemicellulose and cellulose hydrolysis were correlated using models for developing and evaluating the process design. Coproducts originating from the hemicelluloses were assumed to be animal-feed molasses, furfural, and acetic acid. The potential for the process could be significantly improved through utilization of the pentose sugars, which might be realized by fermentation to ethanol. It was found that the best existing design for using the hydrolysate of the second stage is one in which all products other than glucose are concentrated and burned. The lignin residue could also be burned as fuel, but the process heat requirements are about 50% greater than could be supplied by the lignin. Advantages of the two-stage process include high concentration of product solutions and somewhat reduced capital requirements compared to the percolation process, but these advantages are offset to some extent by higher yields from the percolation process.

In: Klass, Donald, ed. Energy from biomass and wastes X. Chicago: Institute of Gas Technology; 1987: 927-947.

INVESTIGATION OF FUNDAMENTALS OF TWO-STAGE, DILUTE SULFURIC ACID HYDROLYSIS OF WOOD

INTRODUCTION

In 1980 the Forest Products Laboratory undertook selecting, describing, and improving the most promising process for converting wood to alcohol commercially for the 1985-87 time frame. We developed a process which we think is suitable, but some equipment testing and evaluation are necessary before the expense of a commercial plant is justifiable. Such evaluation is the object of pilot testing by the Tennessee Valley Authority at the National Fertilizer Development Laboratory, Muscle Shoals, Alabama.

The process, in its simplest outline, is shown in Figure 1. Wood chips, impregnated with a dilute sulfuric acid solution and drained of all interstitial liquid, are charged to the first stage. Here they are heated with direct steam, resulting in the hydrolysis of most of the hemicelluloses, and then discharged to washers. After being washed free of the material solubilized in the first stage, the lignocellulose is reimpregnated with acid and charged to the second stage. As with the first stage, the liquid content of the second-stage charge is kept to a minimum. Conditions here are sufficient to hydrolyze the resistant cellulose. The resulting mixture is discharged to washers where the glucose solution is separated from the lignin residue.

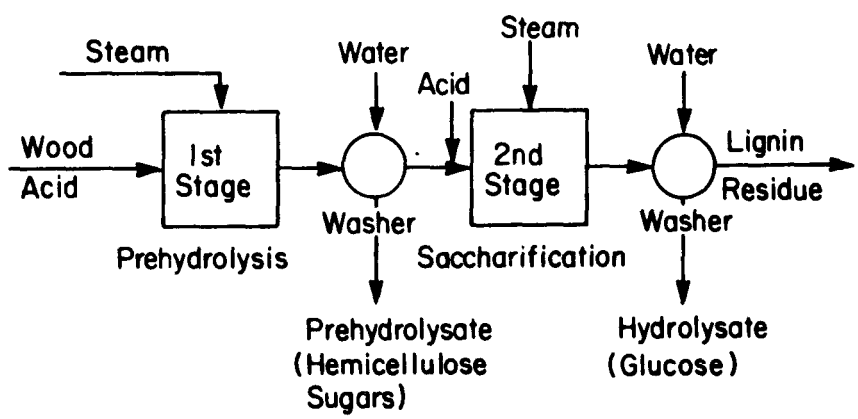

Figure 1. Simple schematic of the two-stage hydrolysis process. (ML84 5484)

The major process elements are the first-stage prehydrolysis and second-stage hydrolysis. The principal emphasis is placed on the prehydrolysis because this process has general application. Prehydrolysis studies were extended to the point of simulating industrial conditions in a small digester, whereas experimental work on the second-stage hydrolysis was restricted to laboratory scale. Since no representative hydrolysis solutions were available from the lignocellulose hydrolysis, no fermentation studies were performed with lignocellulose.

FIRST STAGE (PREHYDROLYSIS)

Hemicellulose Removal

Xylan Removal. The removal of xylan from a hardwood prehydrolyzed under conditions of constant temperature, acidity, and liquid-to-solid ratio (L/S) can best be described by a typical curve on a semilogarithmic plot (Fig. 2). The first portion of the curve, to about the point of 60% removal, is quite linear; the slope is essentially constant. Thereafter, the removal rate continuously decreases until it reaches a minimum value equal to the hydrolysis rate of cellulose at the particular conditions employed. This is deduced from the fact that, on prolonged prehydrolysis, the composition of the carbohydrate remaining in the residue reaches a constant value (4) indicating that a small portion (l-2%) of the xylan is intimately associated with the resistant cellulose.

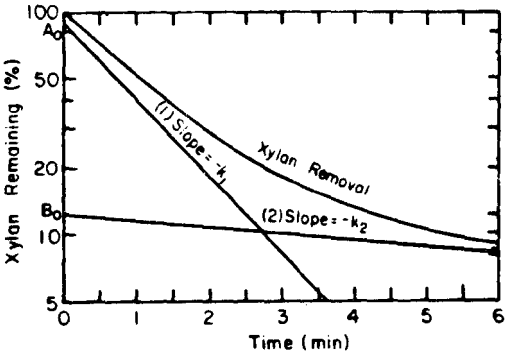

Figure 2. Xylan removal during prehydrolysis. Curves (1) and (2) are linear components of the xylan removal curve. (ML84 5478)

Reasons for the reduction in removal rate after 50-60% of the xylan is removed are unknown. Neither the position nor associated slopes of points on the later portion of the curve in Figure 2 can be predicted. Consequently, it is necessary to collect experimental data in the region of interest. This region for a prehydrolysis aimed at maximum xylose recovery is between 90 and 95% xylan removal. It is convenient to have an analytical expression for the xylan removal curve. The removal curve is assumed to be the sum of two functions, each linear on a semilogarithmic plot:

XR = xylan remaining in residue, % of original

$$= A_o \exp(-k_1 t) + B_o \exp(-k_2 t) \qquad (1)$$

where t = time.

Since the plot is presented as percentage removal, at $t = 0$

$$XR = A_o + B_o = 100 \qquad (2)$$

so that:

$$XR = A_o \exp(-k_1 t) + (100 - A_o)\exp(-k_2 t) \qquad (3)$$

An experimental data set can be used with equation (3) to obtain the values of A_o, k_1, and k_2 for the best fit. These values substituted into equation (1) yield the desired analytical expression. One should not be tempted to attach any fundamental significance to this correlation. It is readily apparent from Figure 2 that the values of the parameters will depend on the particular range in which the data were collected.

It has been assumed in the above discussion that the curve of Figure 2 was obtained under constant conditions of temperature, L/S, and catalytic acid activity $[H^+]$, the independent variables that determine the removal rate. The effect of minor changes in the independent variables on the xylan removal curve can be approximated. This is done by assuming the L/S to have no effect, and k_1 and k_2 to be proportionately affected by the change in acidity and temperature. This will be valid over a very limited range. In general, experimental removal rate data must be collected for the particular wood sample at the temperatures, acidities, and times of interest. These data would be expected to correlate with the independent variables, L/S, temperature, and catalytic acid activity.

Glucan Removal. The hemicellulose portion of wood contains, in addition to xylan, other carbohydrate materials such as galactoglucomannan and arbinogalactan. These are hydrolyzed and removed during prehydrolysis in a manner similar to the removal of xylan. The resulting sugars--glucose, mannose, arabinose, and galactose--form a sizable portion of the total carbohydrate content of the prehydrolysate even in the case of southern red oak where xylose is predominant. Rather, more glucose appears in the hydrolysate than could have originated from galactoglucomannan. Although there is probably some amorphous glucan associated with the hemicelluloses (10), most of the additional glucose must originate from the cellulose fraction. Typically, cellulose hydrolysis indicates that cellulose has an easily hydrolyzable component that is removed at a rate comparable to that of hemicellulose (9). It is this easily hydrolyzable component of the cellulose that was solubilized during prehydrolysis.

Xylose and Furfural Yields

From previous work, it was concluded that xylose yields in excess of 80% would be obtained from red oak, and that increasing temperature of xylose and acidity both tend to increase maximum yields.

In this work, data on both residues and hydrolysates were obtained for a variety of hydrolysis conditions with southern red oak using ampoules, a technique described by

springer (12,13). The calculated xylose yields were all in excess of 80%; they indicated a modest increase with increasing temperature but a slight decrease with increasing acid. Measured values were, with one exception, somewhat greater than the calculated values; this may have resulted from the protection afforded by the presence of oligomers. The experimental yields indicate that the maximum yields increase with increasing acid strength and temperature.

The above data support the conclusion that maximum xylose yields increase with increasing temperature but are inconsistent as to the effect of varying the acid catalyst concentration.

The amount of furfural formed in the prehydrolysis is significant. The xylose degradation can rise to as much as 15% at the point of maximum yield. A model for the complex group of reactions associated with the decomposition of xylose is:

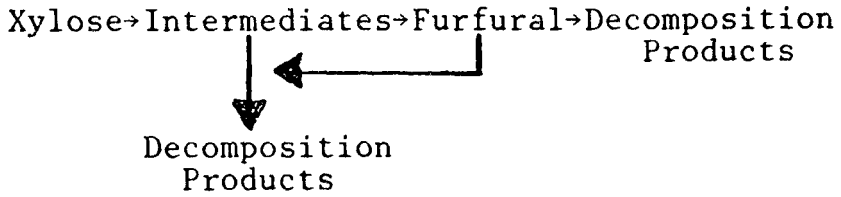

An important point that can be deduced from the above mechanism is that furfural is produced in high yields during prehydrolysis. In the early stages of the reaction, the concentration of furfural is low, and its loss rate is low since this depends on the furfural concentration. The yield of furfural based on xylose reacted is high, beginning at 100%, and decreases as the amount of xylose reacted increases.

Steaming Acid-Impregnated Chips

Studies on the direct steam prehydrolysis of acid-impregnated chips have been carried out in a small jacketed digester.

Conditions in the laboratory digester are intended to simulate, as nearly as possible, the conditions in a continuous digester with direct steam heating. Moist acid-impregnated chips are heated to the desired temperature with saturated steam. Some of the resulting condensate is perhaps absorbed by the chips, and some flows down over the chips below. The movement and location of liquid in the bed is important because it affects the catalyst concentration. The cold inner surface of the digester is also a source of condensate. In this small-scale study, the digester-to-charge mass ratio is much greater than it would be in a commercial unit.

To gather meaningful data, it. was necessary to separate the digester condensate from the chip condensate using a chip container (Fig. 3)--a can with a closed bottom, and

a wall made primarily of screening (A). The can is equipped with a removable false bottom (B) to drain the chips and hold them above the liquid accumulating in the bottom. The lower portion has sufficient volume to hold the liquor that drains from the chips. The lid (C) for the container diverts any condensate dripping from above. The condensate accompanying the incoming steam and that resulting from digester heating falls to the bottom of the digester and is removed by the sparge line (Fig. 4). With the valving arrangement, it is not possible to remove all condensate from the main steam line without admitting steam to either the inside or the jacket of the digester. A large amount of condensate accumulates in the steam line when the equipment is idle. This is discharged by opening the valve to the jacket before admitting steam to the chips. This results in a preheating (indirectly) of the chips for about 3 minutes, with the temperature in the vapor space rising to 100°C. Following the release of this accumulated condensate, steam is admitted directly into the inner space; this instant is taken as time zero.

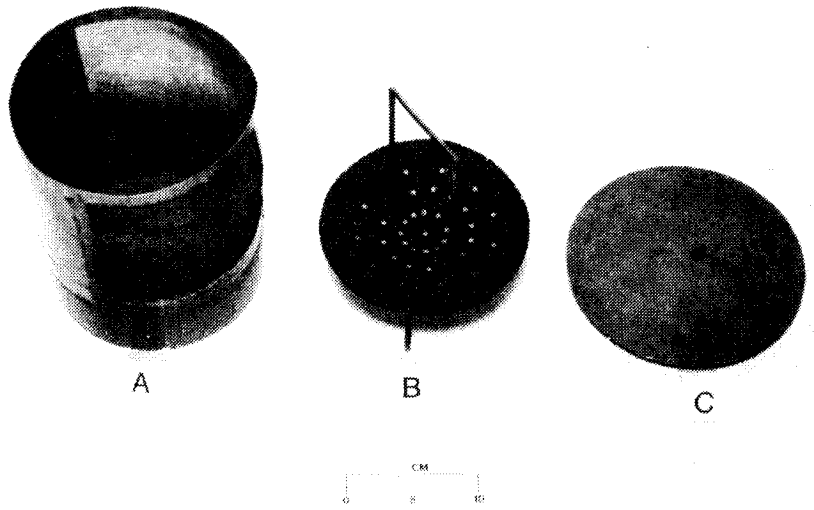

Figure 3. Chip container for prehydrolysis studies.

The xylose yield data pertaining to digester runs 1-18 is compared with calculated yields in Figure 5. The lower curve of xylan removal (Fig. 5 upper), correlated as previously described, is the sum of two exponential terms, specifically:

$$XR = \text{xylan remaining in residue, \%} = 88.5 \exp(-0.713t) + 11.5 \exp(-0.0378t) \quad (4)$$

where t = time (min),

This analytical expression for the liberation of xylose, together with the acid concentration of 0.17% H_2SO_4

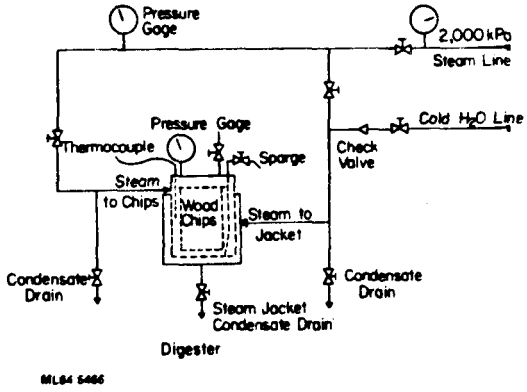

Figure 4. Schematic diagram of prehydrolysis equipment. (ML84 5466)

(pH = 1.77) and the L/S, was sufficient to calculate the yield for xylose in solution (Fig. 5 upper). The calculated maximum yield was 86.2% occurring at 8 minutes; the experimental data indicate a maximum yield of 83.8% at 6 minutes, with the yield at 9 minutes being 83.5%. The logarithmic scale obscures the fit of the data; a much more critical presentation is made in Figure 5 lower. The percentage of xylose reacted is the sum of the xylan in the residue and xylan in solution subtracted from 100. These calculated values are compared to the calculated amount of xylose reacted (the curve in Fig. 5 lower). All the information in Figure 5 lower is contained in Figure 5 upper, but the lower portion is a more stringent test of the data.

The large variations between the experimental points shown in Figure 5 lower are to be expected since they are very sensitive to errors in the xylose determination. The ordinate, "Xylose Reacted," is the difference of two large numbers, one of which is dependent on three separate analyses for xylose. Most of the experimental values fall above the calculated quantity of xylose decomposition--that is, xylose reacted. The data would be best represented by assuming an acid concentration of 0.2% rather than the value of 0.17%, which was used. This difference was judged to be within the limits of error for this group of early runs, and it was concluded that the prehydrolysis is adequately described by the above analysis,

The early runs (1-18) had an acidity considerably lower than the desired pH of 1.45. Runs 19-21 with fully impregnated oak chips were closer to the desired pH. There was a changing acidity during the cook--at 6 minutes the pH was 1.37, corresponding to 0.417% H_2SO_4; by 12 minutes the PH rose to 1.46 or an equivalent acid concentration of 0.338%. The average effective acid concentration over the interval 6 to 12 minutes was 0.38% (pH = 1.42).

The plots for runs 19-21 (Fig. 6) are similar to those for runs 1-18. In this case, the removal curve equation is:

$$XR = 87.0 \exp(-0.914t) + 13.0 \exp(-0.0815t) \quad (5)$$

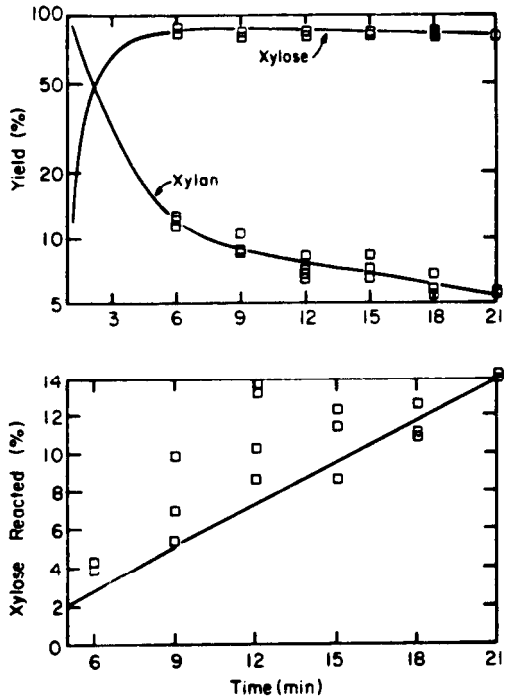

Figure 5. Yields of xylan and xylose over time (upper) and xylose reacted over time (lower) in prehydrolysis of southern red oak, runs 1-18, 170°C, pH - 1.77. Solid lines are calculated. (ML84 5473)

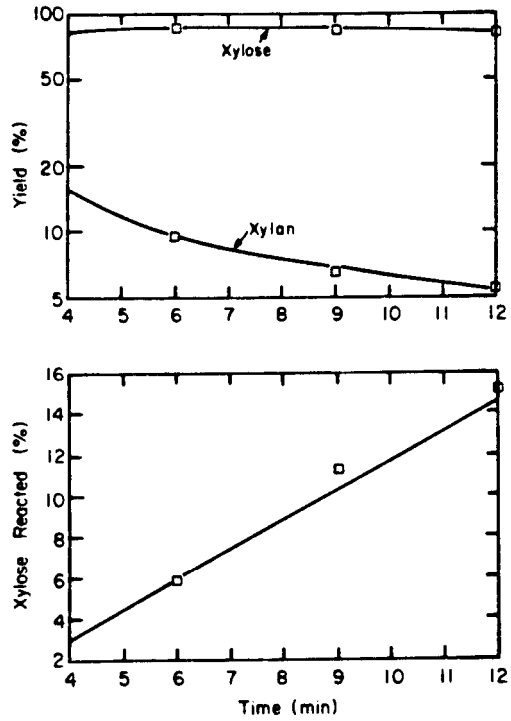

Figure 6. Yields of xylan and xylose over time (upper), and xylose reacted over time (lower) in prehydrolysis of southern red oak, runs 19-21, 170°C, pH = 1.42. Solid lines are calculated. (ML84 5474)

The maximum calculated xylose yield is 84.5% occurring at 6 minutes, whereas the measured maximum is 84.6% at 6 minutes. The experimental values of xylose reacted agree very well with those calculated (Fig. 6 lower).

SECOND STAGE (HYDROLYSIS)

In the past, the usual procedure for estimating glucose yield from cellulose hydrolysis was elementary. It was assumed the system could be modeled simply as two consecutive reactions, each proceeding at the rate predicted by the correlations given by Saeman (11). However, this fails to take into account reversion reactions and other properties of cellulose.

The reversion reactions enter into the considerations in two ways. One is the effect of their presence on the interpretation of the experimental results. The second is that the reversion reactions also enter into the calculation of sugar yields from cellulose since they afford protection for some of the reducing end groups and thus slow degradation.

Other than degradation rate, there are two additional properties of the cellulose that have an effect on glucose yield. One is the amount of readily hydrolyzed material contained in the cellulose; even in native cellulose, this is a significant portion of the total. The second is the basic property of cellulose which lowers the acidity of the reaction mixture; the catalytic hydrogen ion is a function of the concentration and amount of the applied acidic solution and the neutralizing power of the ash.

PROCESS CONCEPTS

Using the prehydrolysis data described, and data gathered at the Forest Products Laboratory over many years to augment the cellulose hydrolysis model, the following concepts for two-stage dilute acid cellulose hydrolysis were proposed,

First Stage

Hydrolyzer Type. The best reactor choice for the first stage seems to be a tubular vessel equipped with a screw auger to move the chips and provided with drainage holes for the escape of liquid during the heatup period. Continuous tubular-type digesters currently used in the pulping industry could perhaps be adapted.

Processing Alternatives. The distribution of the wood components throughout prehydrolysis illustrates an important point about the process (Table 1). The total potential carbohydrates are approximately one-third solubilized and two-thirds in the residue (Table 2). However, yields in the second stage are known to be very low; not more than 50% of the carbohydrates in the prehydrolysate residue will be obtained from the cellulose hydrolysis. Consequently, the yield of carbohydrates from the second-stage hydrolysis will be only about 20 kg/100 kg OD wood, which is less than that obtained in the prehydrolysate. It is also apparent that the total soluble solids content of the prehydrolysate is

considerably greater than that of the second-stage hydrolysate. It is obvious that the manner in which the prehydrolysate is utilized has a major effect on the economic viability of the overall process. Unfortunately, few options exist; only four products seemed worthy of consideration: ethanol, single-cell protein, furfural, and feed molasses.

Table 1. Analysis of southern red oak (*Quercus falcata* Michx.) wood samples

Component	Sample number			
	1[1]	2	3[1]	4
	- - - - - - - - % - - - - - - - -			
Glucan	40.3	38.8	37.8	41.8
Mannan	2.9	2.7	2.1	2.2
Xylan	19.3	19.1	18.4	18.7
Galactan	([2])	1.4	1.1	.8
Arabanan	([2])	1.4	.71	.82
Uronic anhydride	2.9	2.7	3.3	2.7
Acetyl	3.7	3.9	4.3	3.5
Lignin	21.8	22.2	21.9	19.5
Ash	.24	.50	.72	.29
Extractives	5.5	6.0	6.7	6.6
Total	96.6	98.7	97.0	96.9

[1]Sample 1 was used for ampoule studies; sample 3 for digester studies.
[2]The analytical procedure used does not distinguish galactan from glucan nor arabanan from mannan.

Table 2. Material balance of first-stage prehydrolysis at reaction conditions of 170°C, L/S = 1.5, pH = 1.45, 11 min

Component	Wood	Solution	Residue
	- % based on OD process wood -		
Total solids	100 (basis)	43.2	62.7
Potential carbohydrates			
Glucose	42.0	3.16	38.6
Mannose	2.37	1.78	.47
Xylose	20.8	16.6	1.38
Uronic	2.84	1.80	.20
Other	2.02	1.57	.28
Total	70.0	24.9	40.9
Acetyl (as HOAc)	6.00	4.50	1.50
Lignin	21.9	3.18	19.2
Extractives	6.67	6.67	--
Ash	.72	.63	.09
Furfural	--	1.51	--
Sulfate (as H_2SO_4)	--	1.73	--
Unaccounted[1]	3.81	--	5.48

[1]Summative analysis can be less or more than 100%.

Ethanol would be preferred since its production is the primary goal. The ethanol production could perhaps be almost doubled by fermentation of the xylose and glucose in the prehydrolysate. Unfortunately, there is no commercial process available to convert xylose to ethanol. Significant progress is being made along this line (3,6,14); however, the lead time required for commercialization of the proposed process makes it untenable at the present.

At the moment, molasses, marketed as an animal feed, appears to be the preferred way of utilizing the prehydrolysate.

First-Stage Process Description. Figure 7 presents a flow diagram for the first stage based on molasses as the hemicellulose product. The quantities associated with each numbered stream are listed in Table 3.

Furfural Recovery. During prehydrolysis, furfural is unavoidably produced. If not recovered, it is a contaminant in the fermentation and a pollutant in the effluent. The yield of furfural during prehydrolysis is a function of time. Under conditions the same as those in Table 2, maximum xylose yield occurs at about 6 minutes, at which time the furfural yield is 0.8% based on OD wood, and it is present in the prehydrolysate at a concentration of 0.4%.

Further consideration of furfural production leads to the conclusion that it is economically beneficial to extend the duration of the prehydrolysis and thus produce more furfural.

Optimizing furfural yield requires more detailed plant design and other data than are presently available. It is assumed that maximum furfural yield would be near the point of maximum xylan utilization--that is, the point at which the total molar yield of xylose and furfural is at a maximum. This is reached at a time of 10.2 minutes when xylan utilization, as described above, is 91.3% and the yield of furfural (on wood) is 1.5%, or about twice that at maximum xylose yield. At this level, furfural production from an 800-tonne/day hydrolysis plant would be 4.2×10^6 kg/year.

Acetic Acid Recovery and Molasses Quality. Recovery of acetic acid is economically viable because of its effect on product (molasses) quality and effluent treatment costs.

Wood molasses must compete with blackstrap molasses. Although there are no market standards, wood molasses must have approximately the same carbohydrate, nitrogen, and ash content as blackstrap molasses. The ash content of wood molasses has three sources:

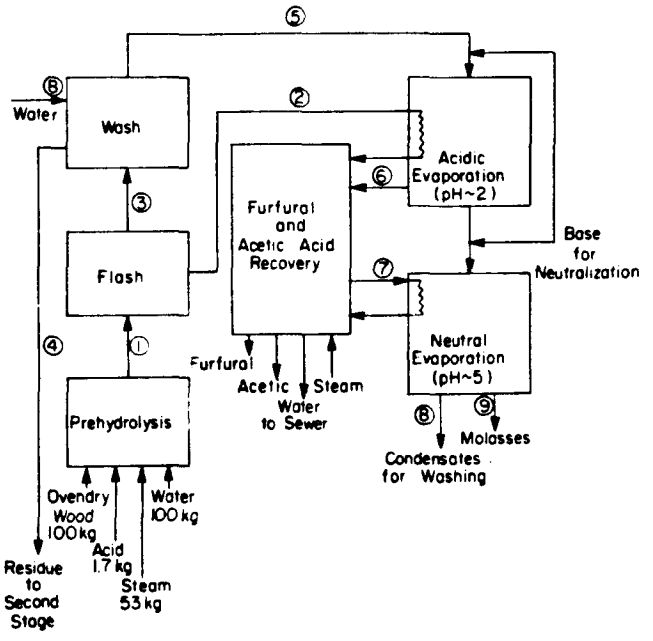

Figure 7. Block diagram of the first-stage processing. (ML84 5475)

Table 3. Components in the streams of Figure 7, first-stage processing

Component	Stream								
	1	2	3	4	5	6	7	8	9
	kg/100 kg OD process wood								
Water	153	18.3	135	120	210	112	40	89	9.2
Potential carbohydrates									
Glucose	41.8	41.8	38.8	3.0	--	--	--	--	3.0
Mannose	2.25	2.25	.56	1.69	--	--	--	--	1.69
Xylose	18.0	18.0	2.21	15.8	--	--	--	--	15.8
Others	1.85	1.85	.36	1.49	--	--	--	--	1.49
Potential acids									
Uronic	2.0	2.0	.29	1.71	--	--	--	--	1.71
Acetic	6.0	.52	5.48	1.70	3.78	2.32	([1])	--	1.46
Lignin	22.4	22.4	19.4	3.0	--	--	--	--	3.0
Extractives	6.67	6.67	.33	6.34	--	--	--	--	6.34
Ash	.72	.72	.47	.60[2]	--	--	--	--	4.20
Furfural	1.51	.55	.96	.06	.90	.85	([1])	.05	
Sulfate (as H_2SO_4)	1.73	1.73	.09	1.64	--	--	--	--	--
Unaccounted	5.48			5.48	--	--	--	--	--
Total weight	259	19.4	240	184	250	115	42	89	46

[1]Quantities of these components depend on recovery unit design.
[2]Lignocellulose residue has exchange capacity.

· The original ash of the wood.

· The sulfuric acid added for hydrolysis and the base required for its neutralization.

· The base required for neutralization of the acetic and uronic acids liberated on hydrolysis.

Fortunately, with the process scheme shown in Figure 7, the ash content of the molasses can be brought to an acceptably low level without using lime--the process depends on minimizing acid consumption in the prehydrolysis, partially neutralizing with NH_3, and removing some of the acetic acid during evaporation. The ash and nitrogen content of the product would be less than that commonly found in blackstrap molasses.

Second Stage

Hydrolyze Type. From the prehydrolysis process described the substrate would be a finely divided, fibrous, pulplike material. With such material, the second-stage hydrolyzer would have to be continuous. Commercially available equipment has not been tested at pilot or semi-commercial scale, but significant progress is being made in its development (1,2,5,8). For the subsequent process calculations, it has been assumed that it would be possible to feed a mixture with an L/S of 2. After heating with direct steam, the L/S would rise to 3; and after hydrolysis, at discharge, the L/S would be about 7.

Processing Alternatives. A materials balance for the second-stage hydrolysis was calculated (Table 4).

About one-half of the charge is solubilized (Table 4). Although the residue is primarily lignin, it contains more than a quarter of the original potential carbohydrates; therefore, it has a composition of around 30% carbohydrate. The outstanding property of the soluble solids is the ratio of glucose to other components. Notice that only 61% of the total soluble material is free glucose. The yield of free glucose is only 48.5% of that potentially available. The major nonglucose component is the reversion material, which is also a carbohydrate product and could conceivably be utilized as such. The organic acids are also prominent, and they are of great importance in the economics of processing. The major acidic component is acetic acid, comprising about 60% of the organic acids on a weight basis and about the same on a molar basis. The acetic acid is incompletely removed in the prehydrolysis; 25% is retained by the first-stage solids (Table 2). This figure is probably high; some subsequent experiments indicate that it is 16%. Even at the lower value, the acetic acid is a prominent impurity in the second-stage hydrolysate. HMF, which like formic acid, is toxic in the fermentation, is present in large quantity. Table 4 makes it apparent that the glucose, which is obtained in only moderate yield (48.4%),

is accompanied by a large amount of impurities (nonglucose components = 12.0 kg/100 kg OD wood).

Table 4. Material balance of second-stage hydrolysis at reaction conditions of 230° C, 0.8% (added) H_2SO_4 L/S = 3

Component	Charge[1]	Solution	Residue
	- - - kg/100 kg OD wood		- - -
Total solids	62.7	30.7	31.9
Potential carbohydrates			
Glucose	38.6	18.7	10.8
Mannose	.47	.14	
Xylose	1.38	--	--
Reversion material	--	3.1	--
Other	.28	.06	--
Acids			
Acetic	1.50	1.5	--
Levulinic	--	.66	--
Formic	--	.38	--
Sulfuric	--	1.50	--
Lignin	19.2	--	20.2
Ash	.47	.45	.09
Furfural	--	.25	--
Hydroxymethylfurfural	--	1.27	--
Unaccounted	5.48	2.50	4.5

[1]Residue from prehydrolysis (see table 18).

Second-Stage Process Description. The flow plan and stream compositions for the second stage of the process are described by Figure 8 and Table 5. Despite its apparent simplicity, serious questions can be raised about the practicality of almost all the steps. Certain problems require further investigation before plant design can be considered.

MATERIAL AND ENERGY BALANCES

The input and output of materials for the two-stage hydrolysis process are shown in Table 6. Figures 9, 10, and 11 show the distribution of organics, water, and energy. Both the table and figures are based on 100 kg of OD wood entering the first-stage hydrolyze.

The wood is assumed to be southern red oak of a composition given in Table 1 (sample 3) and a higher heating value of 19.77 MJ/kg (8,500 Btu/lb). The process material delivered from wood preparation is reduced to 9.5-mm chips which are bark free and composed of 50% moisture. The bark and some additional fuelwood are sent to the boiler. It is assumed that after impregnation the acid was uniformly distributed throughout the chip so that the yields on prehydrolysis are those shown in Table 2. The water content of the prehydrolysate is kept to a minimum by recycling acid solution form prehydrolysis for impregnation of chips.

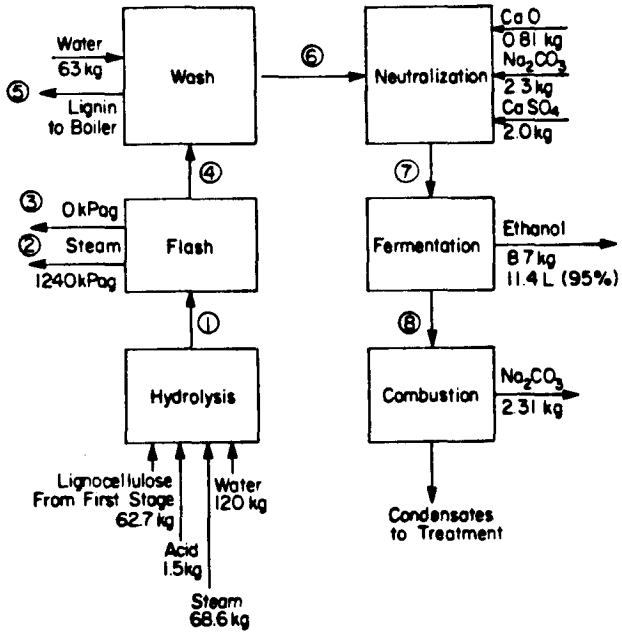

Figure 8. Block diagram of the second-stage processing. (ML84 5469)

Conditions of the prehydrolysis are assumed to be the same as those indicated in Table 2. The acid required to maintain a pH of 1.45 depends on the ash content of the wood. This is assumed to be 0.72%, which is the value found for the particular sample used in this study. Residence time in the prehydrolyzer is 12-14 minutes, resulting in a maximum summative yield of xylose and furfural. In the second stage, the temperature is 230°C, pH = 1.3, and residence time is 35-40 seconds. To decrease the effluent load, the reaction time is set at less than that required to attain maximum glucose yield. Yields for

Table 5. Components in the streams of Figure 8, second-stage processing

Component	Stream							
	1	2	3	4	5	6	7	8
	kg/100 kg OD process wood							
Water	188.6	22.1	27.6	138.9	33	169	169	169
Potential carbohydrates								
Glucose	29.5	--	--	29.5	11.7	17.8	17.8	.9
Mannose	.1	--	--	.1	--	.1	.1	--
Reversion	3.1	--	--	3.1	.2	2.9	2.9	2.9
Other	.1	--	--	.1	--	.1	.1	.1
Organic acids[1]								
Acetic	1.5	.23	.27	1.0	.05	.95	.95	.95
Levulinic	.66	--	--	.66	.03	.63	.63	.63
Formic	.38	.03	.05	.30	.02	.3	.3	.3
Lignin	19.9	--	--	19.9	19.9	--	--	--
Ash	.45	--	--	.45	([2])	.45	--	4.0
Furfural	.25	.11	.08	.06	--	.06	.06	.06
Hydroxymethylfurfural	1.3	--	--	1.3	.06	1.2	1.2	1.2
Sulfate (H_2SO_4)	1.5	--	--	1.5	.08	1.42	--	--
Unaccounted	7	--	--	7	4.5	2.5	2.5	2.5
Total	253	23	28	208	64	198	198	180

[1]May not be present as free acids.
[2]Unknown--probably less than 0.5%.

the various products from the cellulose hydrolyzer are shown in Table 4.

Table 6. Input-output for two-stage hydrolysis

Component	Mass	Value	
	kg/100 kg OD process wood	$/tonne	$
	INPUT		
Wood (OD)	119[1]	33	3.93
Sulfuric acid	3.3	88	.29
Soda ash	5.3	132	.70
Lime	.8	38.5	.03
Total			4.95
	OUTPUT		
Molasses	47.4	55	2.61
Furfural	1.15	1,450	1.67
Acetic acid	2	580	1.16
Ethanol (100%)	8.7	585	5.09
Subtotal			10.53
Soda ash (byproduct)	2.3	66	.15
Total			10.68

[1]Includes 19 kg of wood substance used for boiler fuel.

It was assumed that 95% of the soluble solids were recovered in each of the washing units. Boiler efficiency was taken as 60%, and the efficiency of the fermentation as 95%.

Figure 9 shows the flow of organics through the process. Notice that 100 kg of OD wood contains 99.3 kg of organic matter since the wood has a 0.7% ash content. Of the total carbon charged (59.1 kg), 37% is in the marketable products, most of which is contained in the molasses; only 7.7% of the total carbon charged is contained in the ethanol. Most of the remainder leaves as carbon dioxide from combustion and fermentation, but 1.3% is present in effluent streams.

The necessity of the ancillary processing steps to reduce the pollution load is clearly evident (Fig. 9). If the furfural-acetic acid recovery and evaporation combustion units were deleted, the waste streams would contain more than 13% of the carbon charges. Furfural and acetic acid removal decreases the effluent load by 90% to about 1.3%. It is probable that the effluent load could be reduced still further because there is a possibility that some of the effluent from the recovery unit could be recycled into the process. The biological oxygen demand (BOD) from an 800-tonne/day plant would be about 16,000 kg/day (from Fig. 9).

The water content of the effluent streams is shown (Fig. 10) as part of the distribution of process water (cooling water not being considered). The total volume of foul condensate is moderate: for an 800 tonne/day plant, it would be about 2.3 x 10^3 m^3/day. This results from the low water input to the process,which amounts to only 4.2 m^3/tonne of wood.

The process heat requirements are about 50% greater than the heat available from the lignin residue (Fig. 11). The additional energy requirement is supplied from bark and

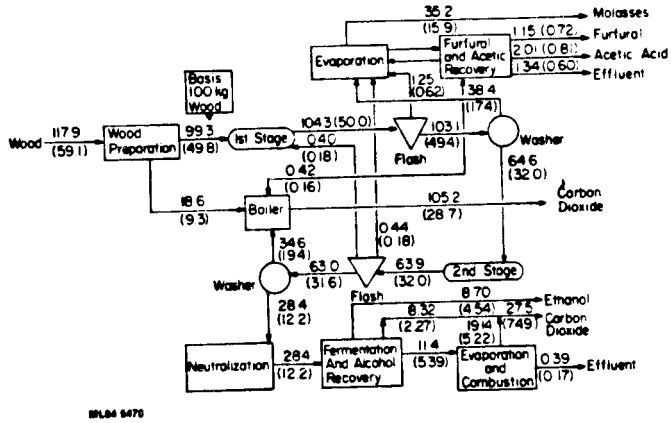

Figure 9. Distribution of organics through two-stage hydrolysis. Numbers in parentheses are kg of carbon; others are kg of organics. (ML84 5470)

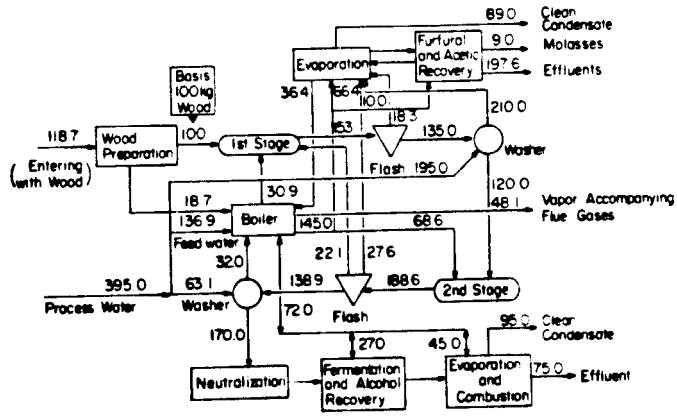

Figure 10. Distribution of process water through two-stage hydrolysis. All numbers are kg of water. (ML84 5471)

additional fuelwood. As indicated, about 16% of the material entering wood preparation is sent to the boiler. No electricity needs were considered.

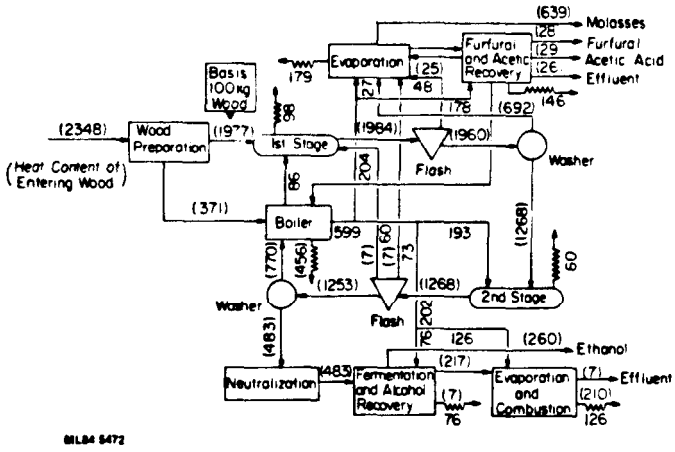

Figure 11. Distribution of energy through two-stage hydrolysis. Numbers in parentheses are MJ of enthalpy of organics contained in stream; other numbers are MJ of enthalpy of steam. Heat loss from unit is shown as ⁓ (ML84 5472)

The heat consumed in a particular unit may be supplied either by oxidation of organics or from the enthalpy of fermentation--both the potential energy content of organics and the heat content of the steam are consumed. The sum of steam consumed in the furfural-acetic acid recovery and evaporation-combustion units is 279 MJ, which is 40% of the steam generated.

Although more steam enters the second-stage hydrolyze than any other unit, its energy consumption is the lowest. This is because it is credited with the large amount of low-pressure steam recovered from the second-stage flash unit. The discharge from the reactor is flashed to atmospheric pressure in two steps. The higher pressure steam is used in the first-stage prehydrolysis, and the atmospheric steam is sent to the evaporators. On the basis of available energy, the second-stage hydrolyzer is the major consumer.

COMPARISON WITH THE PERCOLATION PROCESS

Both the two-stage and percolation saccharification processes can be considered to be reasonably near the point of commercial exploitation. The work presented here on the two-stage process was undertaken on the supposition that many of the disadvantages inherent in the percolation process (7) could be overcome. This has proved to be true, but to a lesser extent than it had been hoped. The following discussion compares the two processes. A significant advantage of the two-stage process is the high concentration of the product solutions. As indicated in our analysis, the solution from the first stage, which contains the largest quantity of solubilized material, has a total solids concentration of 18%, with a xylose concentration of 7.5%. Assuming the development of suitable equipment, the second-stage solution contains a total solids concentration of

16.7% and a glucose content of 10%. These concentrations are at least double those obtained from percolation. The energy consumption and equipment size for subsequent processing steps are roughly halved by two-stage processing. However, the capital requirements for the hydrolysis itself are not greatly reduced. In the percolation process, prehydrolysis, saccharification, and washing are all done in a single vessel. In two-stage operation, two reactors and two sets of washing equipment are needed. The net difference for both equipment and energy cost for hydrolysis is only slightly in favor of the two-stage process. For ethanol production the energy requirements of two-stage operation should be about 40% less than the percolation process, and equipment cost, about 25% less.

The purity of the solutions generated by the two-stage process is considerably better than that obtained by percolation. The separation between the hemicellulose carbohydrates and the glucose is much better, and the ratio of degradation products to carbohydrates is lower.

The advantages of the two-stage process are offset to some extent by the higher yields of the percolation process. The yield advantage depends both on the type of wood being considered and the subsequent processing of the solution.

Unfortunately, available data on the percolation process relate primarily to softwoods, and yields are given either as total sugars obtained or as recovered ethanol. No data are available on the changing concentration and composition of the product solution. The carbohydrate yields from each of the component fractions of the wood--hemicellulose and cellulose--are unknown. Because of this, the yield comparisons given below are uncertain estimates, but some points for consideration are brought out.

The southern red oak used in this study contains 37.8% anhydroglucose and 18.4% anhydroxylose (Table 1, sample 3). On hydrolysis, these yield 42.0% glucose and 20.9% xylose, a total of 62.9%. potential sugars on the basis of the wood. Complete conversion to ethanol would result in 420 L of 190-proof ethanol/tonne of wood--28O L from glucose and 140 L from xylose.

When only glucose is considered to be fermentable to ethanol, the ethanol produced in the two-stage process (Fig. 9) is 8.70 kg/100 kg of process wood, which is equivalent to 114 L/tonne. The ethanol yield is 40.7% of that theoretically available from the potential glucose of the wood. By the percolation process, the estimated ethanol production is 124 L/tonne, about 9% greater than that obtained by two-stage processing. The yield by percolation is 44% of that theoretically available. The efficiency of saccharification in percolation is actually much greater than this, probably about 55-60%, but much of the glucose produced accompanies the hemicellulose stream and could not be economically processed to ethanol. The percolation method, operating on hardwood and producing ethanol

from the glucose-rich fraction only, would have a yield advantage over two-stage processing.

If it is assumed that xylose as well as glucose can be fermented to ethanol with equal efficiency, the percolation process has a much greater yield advantage. This is because the xylose-fermenting organism would also utilize glucose, and the poor separation of the sugars is inconsequential. Using this assumption, the percolation-process yield is estimated at 267 L/tonne and two-stage operation 234 L/tonne, a 14% yield advantage for percolation.

Yields for two-stage processing are considerably higher if it is assumed that the reversion material can be converted to ethanol. If this were the case, 133 L/tonne could be obtained solely from the glucose fraction. This increase of 19 L/tonne from the oligomers reverses the ranking and gives two-stage processing a 7.3% advantage under the supposition that xylose is not fermentable to ethanol. If it is assumed that all carbohydrates (xylose, glucose, and reversion products) are fermentable, the percolation process has-a 5.5% greater ethanol yield.

ACKNOWLEDGMENTS

This report is a synopsis of work conducted by John F. Harris, Anthony Conner, Thomas W. Jeffries, James L. Minor, Roger C. Pettersen, Ralph W. Scott, Edward L. Springer, and Theodore H. Wegner in cooperation with the authors. A more comprehensive compilation of the work is contained in the publication, Two-Stage, Dilute Sulfuric Acid Hydrolysis of Wood: An Investigation of Fundamentals--Forest Products Laboratory Report FPL-45.

REFERENCES CITED

1. Bender, R. "Method of treating lignocellulose materials to produce ruminant feed," U.S. Patent 4,136,207; January 23, 1979.

2. Church, J. A. "Continuous high-solids acid hydrolysis of biomass in a 1-1/2-in. plug flow reactor," Ind. and Eng. Chem. Prod. Res. and Dev. 20(2), 371-378 (1981).

3. Gong, C., Ladisch, M. R., and Tsao, G. T. "Production of ethanol from wood hemicellulose hydrolyzates by a xylose-fermenting yeast mutant, Candida sp. XF 217," Biotechnol. Lett. 3(11), 657-662 (1981).

4. Harris, J. F., Saeman, J. F., and Locke, E. G. "Wood as a chemical raw material," Chapter 11. In: Browning, B. L., ed. The chemistry of wood, 535-585. New York: Interscience Publishers, 1963.

5. Iotech Corporation. "Optimization of steam explosion pretreatment," 360 p. Final Rep., DOE Contract No. DE-AC02-79ETZ3050. Ottawa, Ont., Canada: Iotech Corp. 1980.

6. Jeffries, T. W. "A comparison of Candida tropicalis and Pachysolen tannophilus for conversion of xylose to ethanol," In: Scott, C. D., ed. Proceedings of 4th Symposium on Biotechnology in Energy Production and Conservation [1982 May 11-14; Gatlinburg, TN], 103-110. Biotechnology and Bioengineering Symposium No. 12. New York: John Wiley and Sons, 1982.

7. Lloyd, R. A., and Harris, J. F. "Wood hydrolysis for sugar production," Rep. 2029. Madison, WI: U.S. Department of Agriculture, Forest Service, Forest Products Laboratory, 1955.

8. McParland, J. J., Grethlein, H. E., and Converse, A. O. "Kinetics of acid hydrolysis of corn stover," Solar Energy 28(1), 55-63 (1982).

9. Millett, M. S., Moore, W. E., and Saeman, J. F. "Preparation and properties of some hydrocelluloses," Ind. and Eng. Chem. 46(7), 1493-1509 (1954).

10. Rydholm, S. A. Pulping Processes, 1269 p. New York: Interscience Publishers, 1965.

11. Saeman, J. F. "Kinetics of wood saccharification," Ind. and Eng. Chem. 37(1), 43-52 (1945).

12. Springer, E. L. "Rate studies of the hydrotropic delignification of aspenwood," 217 p. Ph. D. thesis. Madison, WI: University of Wisconsin, Department of Chemical Engineering, 1961.

13. Springer, E. L., Harris, J. F., and Neill, W. K. "Rate studies of the hydrotropic delignification of aspenwood," Tappi 46(9), 551-555 (1963).

14. Suihko, M. L., and Enari, T. M. "The production of ethanol from D-glucose and D-xylose by different Fusarium strains," Biotechnol. Lett. 3(12), 723-728 (1981).