In: Applying the latest research to hardwood problems: Proceedings of the 15th annual hardwood symposium of the Hardwood Research Council; 1987 May 10-12; Memphis, TN. Memphis, TN: Hardwood Research Council; 1987: 100-108.

JUVENILE WOOD, TENSION WOOD, AND GROWTH STRESS EFFECTS ON PROCESSING HARDWOODS

By
Robert R. Maeglin[1]

Introduction

In the United States the era of high-grade, large-diameter hardwood trees as the industry standard for lumber and veneer is over. The bottom limits for size and quality of logs are continually going down, resulting in utilization of smaller and smaller trees with a generally lower age--trees with a higher proportion of juvenile wood, tension wood, and growth stress.

The most recent forest inventory statistics (USDA Forest Service 1982) show that average hardwood growing stock tree diameter decreased by 0.5 inch between 1952 and 1977. The average tree diameter was 11.9 inches in 1952 and 11.4 inches in 1977. Though the decrease of 0.5 inch seems small, it represents a tremendous volume of small timber. For example in 1952 there were 141 billion cubic feet of hardwood growing stock between 5 and 17 inches diameter; in 1977 there were 210 billion cubic feet. As the resource becomes composed of more small timber (79% in 1952, 82% in 1977), more small timber will be used.

Grade lumber and veneer used to be manufactured only from the larger and higher quality hardwood logs. Only the mature wood was sawn, sliced, or peeled for high-value products. The core wood almost always went to ties, boxes, pallet stock, and other lower value products, where warp, instability, and other problems were of less importance. Now, as more small trees are used for lumber and veneer, greater problems are arising in obtaining the higher grades of wood. Finding ways to produce quality lumber and veneer from these trees is becoming very important.

Wood near the pith of a tree (core wood) is different from wood a variable distance from the pith (mature wood). The differences between pith-related core wood and mature wood may be slight or great. The differences, especially when large, can cause problems of warp, excessive shrinking and swelling, fuzzy grain,

---

[1]Team Leader, USDA Forest Serv., Forest Products Laboratory, Madison, WI.

[2] All trees 5 inches diameter and larger at breast height (4.5 ft.) in a stand.

and general instability in the manufacture and use of the wood. These problems may show up in the wood when sawing, veneering, drying, machining, etc.

The core wood in hardwoods is affected by juvenile wood, tension wood, and growth stresses. This paper decribes these three features as found in hardwoods, and ways to use the wood while reducing some of the difficulties normally incurred, also some ways to improve future crops.

Juvenile wood was not a major problem to manufacturers and users of hardwoods until a couple decades ago. But, juvenility in conifers has been a concern for a century or q ore. Sanio in 1872, concerned about differences in fiber length between juvenile and mature wood, was the first to discuss fiber-length trends from pith to bark (Lewark 1986).

The extensive planting and intensive cultivation of pines for relatively short rotations in many countries of the world has greatly emphasized the problem of juvenile wood in recent decades. Difficulties with juvenile wood in conifers are related to the morphology (the size and shape) of the cells and the physical properties affected by cellular structure near the pith. Zobel et al. (1959) and Bendtsen (1978) both detail the features of juvenile wood in conifers. They also note that the juvenile core is generally from 5 to 20 rings from pith.

Juvenility (and tension wood and growth stress) in the central core of hardwoods has become a problem to users of the resource because of smaller timber. At one time some scientists thought that there was no juvenile wood in hardwoods, and others said that it was so slight as to be unimportant (Jett and Zobel 1975). Panshin and de Zeeuw (1980) state, “As a general rule the low quality of juvenile wood is more marked in conifers than in hardwoods.”

While the magnitude of change in hardwoods may not be as large and the rate of change from juvenile to mature may not be as fast as that in softwoods, the negative product may be just as great.

Today we must face up to the problems of the core wood in hardwoods and learn how to handle them while using the wood.

The Problem

Juvenile Wood

Zobel et al. (1959) state that, “Since trees normally pass through a juvenile period of leaf formation, flower production, fruiting, etc., it is not so strange that this period is also encountered in the formation of wood . . ..” They also note that “The mechanisms or reasons for the production of a different or juvenile type of wood near the pith is still open to conjecture.”

As noted in the introduction, there are a number of features proven to constitute juvenility in softwoods. These hold true in the hardwoods too. The big difference is that the magnitudes of change from pith to bark are different in hardwoods. For example, fiber lengths in softwoods may be four times greater in mature wood as in juvenile wood, whereas the hardwood fibers may increase only two times from juvenile to mature wood.

The major anatomical features involved in the change from juvenile wood to mature wood are fiber length, fibril angle, proportion of cell type, cell diameter, cell wall thickness, and cellulose, lignin, and moisture content. Other factors

such as specific gravity, strength, and shrinking/swelling depend on the anatomical features listed above. The problems incurred because of juvenile wood are excessive longitudinal shrinkage, warp, and reduced strength.

Juvenile wood is that wood formed in proximity to the crown while the tree is young. The period of time of juvenile wood formation is variable for different species and between trees of a species. The severity of the juvenile wood, as compared to mature wood, depends to some extent on growth conditions and genetic factors. Some of the features of juvenile wood, as compared to mature wood, are:

1. Fiber length is shorter
2. Vessel length is shorter
3. Cell diameter is smaller
4. Cell wall thickness is thinner
5. Fibril angle is greater
6. Proportions of fibers are greater
7. Proportions of vessels are lower
8. Holocellulose content is higher

Figure 1 shows the relationships of various morphological features to age (distance from pith) for hardwoods.

Property differences also exist because of wood structure variation. such as lower density, greater longitudinal shrinking/swelling, and lower strength (Fig. 2).

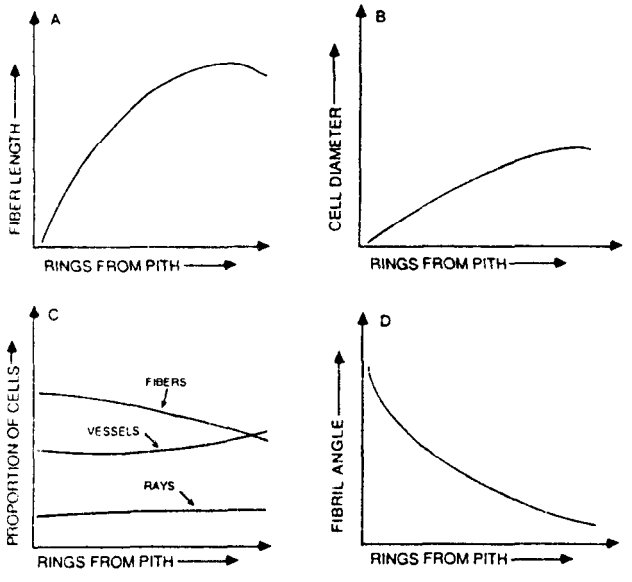

ML87 5419

Figure 1. --Generalized curves of cell features with age (rings from pith). A. Fiber length B. Cell diameter C. Proportions of cells D. Fibril angle.

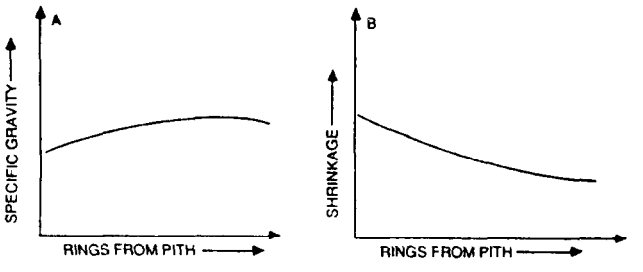

ML87 5420

Figure 2. --Generalized curves for physical properties. A. Specific gravity B. Shrinkage.

Tension Wood

Tension wood, also known as reaction wood, is a response of the tree to external stimuli. The most common cause of tension wood formation is leaning of a tree. The tension wood is formed on the upper side of the leaning tree and is believed to be a physiological response to gravitational forces. Tension wood is,

in fact, in tension and works to upright the leaning stem. Tension wood may also be formed in response to wind or similar bending forces; in these cases the wood is stiffened against the force being applied to the stem. Finally, tension wood may be formed in response to light--bending the tree toward the light.

Tension wood may be formed at any time during the life of a tree, but young trees are especially subject to its formation. This is largely because the young trees are small and flexible and may be easily bent by snow, ice, or wind, or subject to changing light conditions. During the formative years, considerable tension wood can form in the juvenile zone. It may be found dispersed throughout the stem, not just on one side as is more likely to occur in older trees. This dispersal makes it difficult to isolate the juvenile tension wood for correction in processing.

The features of tension wood are in some respects like juvenile wood, particularly in longitudinal shrinking and swelling. Tension wood is composed of fibrous cells that contain thickened walls of undignified cellulose, called gelatinous fibers. They have higher density than normal fibers, but shrink and swell about 2 to 2.5 times more longitudinally. The gelatinous fibers may also result in fuzzy grain when cut. Most often, the major impact of tension wood occurs when it is on one side of a piece of lumber. Differential shrinkage between normal and tension wood then results in warp. Tension wood is also responsible for a lot of the buckling that occurs in veneer during drying.

Growth Stresses

Growth stresses are formed in the growing tree at the time of new wood formation. Structurally, the stresses are used by the tree to maintain an upright position (prestressed wood). The stresses are formed in three dimensions (longitudinal, radial, and tangential), but longitudinal stresses are the most important to hardwood users because of their effects on warp.

As new cells are divided from the cambium, the new cells are flat but essentially as long in the main body of the cell as they will ever be (the fine tips will continue to grow intrusively). As the new cells are separated from the cambium, they are glued together with lignin.

The cells almost immediately begin to swell in diameter and form additional wall layers. As the cells expand in diameter they cause tension to form longitudinally between the cells. The magnitude of the tension stress increases with each annual growth ring to some maximum tree diameter (I will arbitrarily say 16 to 20 inches for temperate woods); then they tend to stabilize. As the tension increases at the periphery of the tree, balanced compression stresses are developed at the center of the tree. These stresses increase largely during the juvenile period of growth.

Growth stresses cause checking or splitting of logs, warp of lumber and veneer, and springing of logs while sawing. In old-growth logs the problems of longitudinal growth stress are minimized because of the size of the logs. Warping occurs because of differentials in stress levels (Fig. 3). In logs 24 inches or larger differential stress levels across the thickness of boards being cut are reduced because the maximum stress is achieved when the logs were no more than 16 to 20 inches in diameter. This means that the maximum stresses are distributed over a larger radius, such that the differential across a given board thickness is reduced. With smaller log sizes though, the problems of spring, end checking, and warp are accentuated.

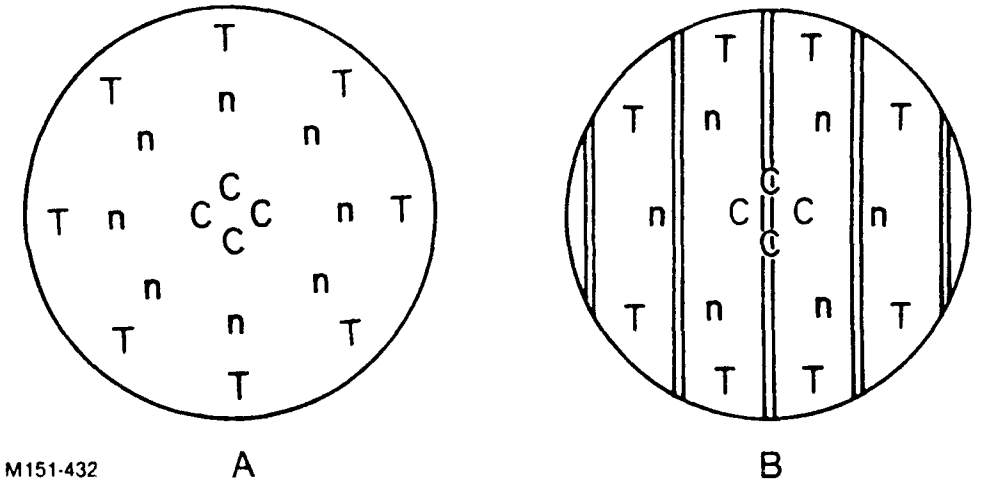

Figure 3.--Distribution of growth stresses in hardwood tree, cross sectional view. A. The stress levels diminish from high tension at the periphery to neutral, and from high compression at pith to neutral. B. Distribution of stresses when live sawing.

Three problem-causing elements have been discussed that affect the processing of young hardwoods: juvenile wood, tension wood, and growth stress. They are, together, major concerns for the industry now and will be even greater in the future. The question then is, what can be done to get around these difficulties?

Solutions To The Problem

Perhaps the easiest way around the problems of core wood, would be to grow the trees longer and larger and use only mature wood, as was done years ago. But, the era of large, old trees is gone. What then are the alternative solutions?

There are long-range and short-range alternatives. For the long range, genetics and silvicultural treatment are the logical approaches. For the short range, we would look to processing technology.

Long-Range Alternatives

If indeed the future timber resource will be composed largely of younger trees, we must develop through genetics and silviculture the means to overcome or compensate for the core wood problems.

Genetics. Genetically, there are variations in the degree of juvenility, levels of tension wood formation, and growth stress levels. Selection of trees for positive attributes in these areas could minimize problems years from now.

The most critical feature of juvenile wood, from the standpoint of warping and stability in use, is fibril angle. Fibril angle is genetically controlled, and it is possible to select and breed trees to reduce fibril angle in juvenile wood to get more stable wood and reduce warp.

Other features that have considerable variability from tree to tree are fiber length, fiber diameter, cell wall thickness, and proportion of fibers, vessels, etc. These features could have important effects on increasing strength properties. Similar genetic changes to reduce the amount of tension wood formed or

the level of growth stresses would likewise improve the quality of the wood for products. Alteration of all these factors by genetics would result in higher quality wood from younger trees.

Genetic engineering may soon make it possible to gene-splice desired features into new planting stock, and thereby achieve genetic change more quickly.

Silviculture. Cultural practices may also affect the amount of mature wood grown on a stem. Increasing the growth rate of trees could have a major impact on the amount of wood in the mature wood zone. The effect of growth rate on the amount of mature wood is depicted in Figure 4 It shows three different growth rates for an assumed juvenile core of 15 years. It is assumed in the illustration that the growth rate is increased to a maximum rate after the first 15 years.

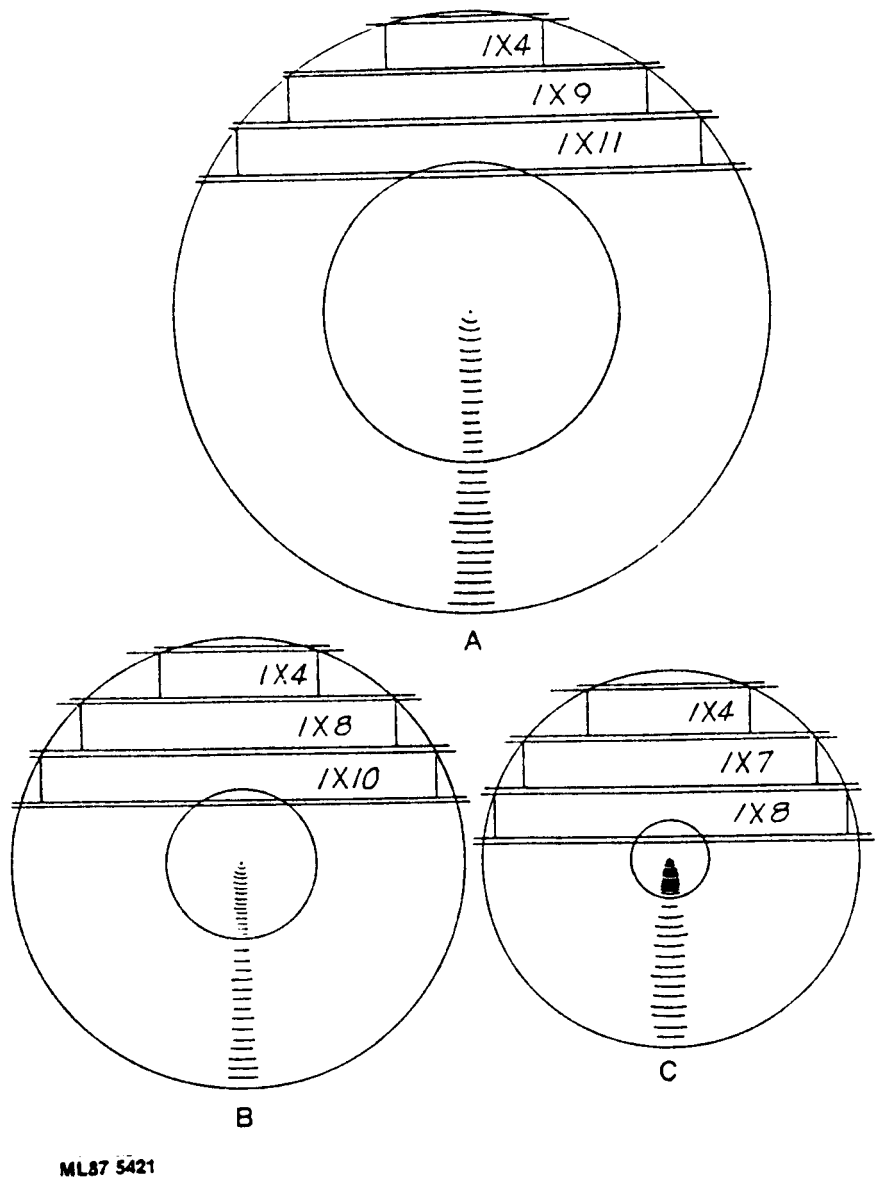

Figure 4.--Effects of different juvenile growth rates. Each cross section represents 30 years growth. A. Growth rate constant in juvenile and mature wood zones. B. Junevile growth 1/2 of A. C. Juvenile growth 1/4 of A.

Some people have suggested that one should minimize the juvenile core and maximize mature wood growth to reduce problems with the juvenile core. This could be a very costly approach, however. The slowest growth rate for the 15-year core (C), followed by the maximum growth rate, results in the smallest diameter tree after a total of 30 years. The intermediate growth rate for the first 15 years (B), followed by the maximum rate for the next 15 years, gives a much larger tree and a greater amount of mature wood. The maximum total wood, and at the same time the greatest amount of mature wood, is obtained when the juvenile core as well the rest of the growth is maximized (A). Figure 4 depicts 26% q ore mature wood board volume from A than C.

To achieve the maximum growth rate it is necessary to use all of the optional silvicultural techniques, from site selection for a given species through fertilization and thinning. Maximizing growth rate may, however, not be completely without problems. However, there are conflicting data on the results of increased growth rate (Bendtsen 1978).

Short-Range Alternatives

In the short run we can take the following steps during processing to minimize the problems affiliated with the core wood:

1. Understand the sources of the problems and learn to identify them
2. Learn to use the processing techniques available to minimize problems.

I have explained the origin of juvenile wood, tension wood, and growth stress, and the problems that each causes in processing. But learning to identify them in the log is not always easy. Juvenile wood does not look any different to the naked eye than mature wood, nor does wood with high growth-stress levels look any different than wood with low stress. Tension wood can be identified sometimes, but not at other times. What then can you do to identify the problem areas in the logs?

For juvenile wood an average age count can help. In most geographic areas the growth rate for a given species is nearly the same, and an average diameter can be determined for a given number of rings from pith. Based on this average “juvenile core” diameter, cutting, slicing, or peeling can be modified to avoid the core.

Tension wood can be identified in the most troublesome cases by its eccentric growth (Fig. 5). If the log is oriented so that the tension wood can be isolated and kept from being mixed with the normal wood, trouble can be reduced (Fig. 5). The tension wood will still have greater longitudinal shrinking and swelling, but it will not unbalance normal wood shrinkage by warping. Tension wood boards should not be used, though, in items where excessive shrink and swell will cause problems.

The saw-dry-rip (SDR) technique can also be effective in minimizing the problems of tension wood. In research done on structural lumber manufactured by SDR from hardwoods (Maeglin and Boone 1983), the negative effects of tension wood were minimized. This technique will work on thinner lumber as well.

As with juvenile wood, growth stresses are not visible to the naked eye. However, the stresses generally peak at a size which I have arbitrarily designated as 16 to 20 inches in diameter. Because the stresses in hardwoods are distributed regularly in the tree (Fig. 3), it is possible to balance them when cutting to minimize their effect on warp. In several papers, of which Maeglin and Boone (1983) is typical, we describe how balancing the stresses by live sawing and then drying

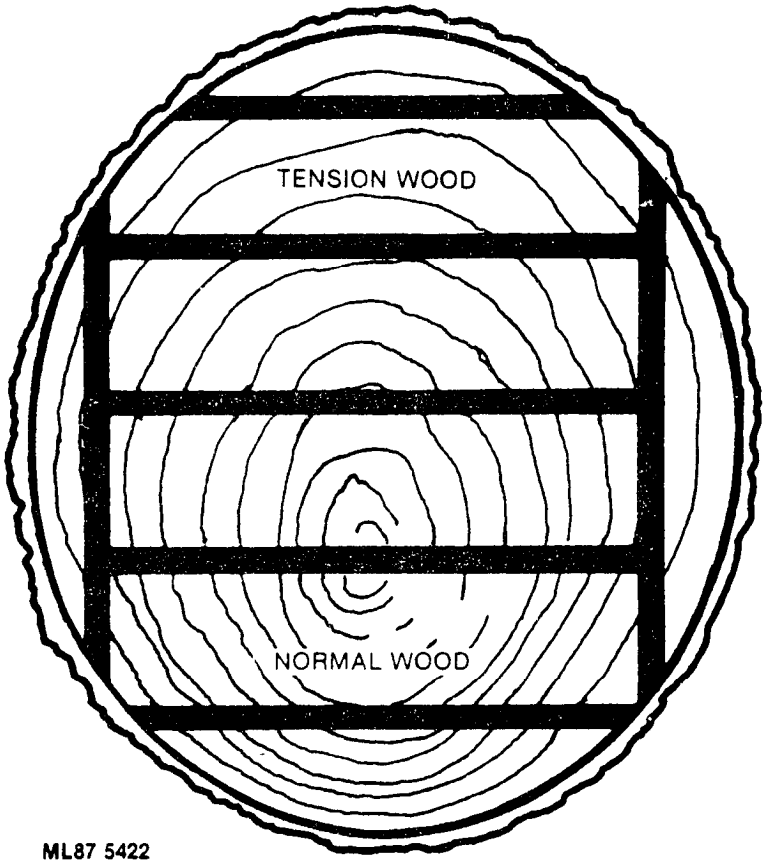

Figure 5. --Cutting pattern for eccentric logs, to isolate tension wood.

the full-width lumber will greatly reduce warping. This sequence of operations forestalls warp on the saw, reduces growth stresses by balancing with drying stresses, and, if high temperature drying (over 212 °F) is used, alters fiber arrangement by lignin plasticization, greatly reducing growth stresses in the wood.

It is always a good idea to use balanced cutting of logs. It is important to rotate the log 180 degrees between cuts to reduce warp-causing imbalance in stresses. Rotating 90 degrees should not be done.

Summary and Conclusions

Because of the continuing decline in the average diameter of the hardwood timber resource, we can expect that more trees of smaller diameter and younger age will be used in the future. This will result in problems due to juvenile wood, tension wood, and growth stresses. The greatest problems are warp and dimensional instability in use. Lower strength may also be a problem with juvenile wood and tension wood.

It behooves manufacturers to know what these problems are so that they understand what is happening to the wood. It is also important to know how to identify the source of difficulty, to know that a roughly 15-year core will have junenile wood characteristics, that the really troublesome tension wood will be found in eccentric-shaped logs, and that growth stresses need to be balanced in cutting.

To achieve the best control over these problems, long-term genetic and silvicultural means should be used in combination with short-range processing technology. Genetics can provide reduced negative characteristics in juvenile wood as well as lower levels of tension wood and growth stresses. Good silvicultural practices can provide faster growth rates and larger volumes of mature wood for better products. Finally, special processing methods can help isolate juvenile wood and tesion wood, and balance the growth stresses in the wood for reduction or elimination.

Literature Cited

Bendtsen, B. A. 1978. Properties of wood from improved and intensively managed trees. Forest Prod. J. 28(10):61-72.

Jett, J. B.; Zobel, B. J. 1975. Wood and pulping properties of young hardwoods. Tappi J. 58(1):92-96.

Lewark, S. 1986. Anatomical and physical differences between juvenile and adult wood. In proceedings, 18th IUFRO World Congress, Ljubljana, Yugoslavia. Division 5, Forest Products Vol. 7:272-281.

Maeglin, R. R.; Boone, R. S. 1983. Manufacture of quality yellow-poplar studs using the saw-dry-rip (SDR) concept. Forest Prod. J. 33(3):10-18.

Panshin, A. J.; de Zeeuw, C. 1980. Textbook of Wood Technology. 4th ed., Vol. 1. McGraw Hill Book Co., New York. 722 p.

U.S. Department of Agriculture, Forest Service. 1982. An analysis of the timber situation in the United States 1952-2030. USDA Forest Serv. Forest Resource Rep. No. 23. 499 p. Washington, DC.

Zobel, B. J.; Webb, C.; Henson, F. 1959. Core or juvenile wood of loblolly and slash pine trees. Tappi J. 42(5):345-355.