APPALACHIAN HARDWOODS FOR PALLETS:

Effect of fabrication variables and lumber characteristics on performance

U.S.D.A. FOREST SERVICE
RESEARCH PAPER
FPL 112
AUGUST 1969

U.S. Department of Agriculture
Forest Service
Forest Products Laboratory
Madison, Wis.

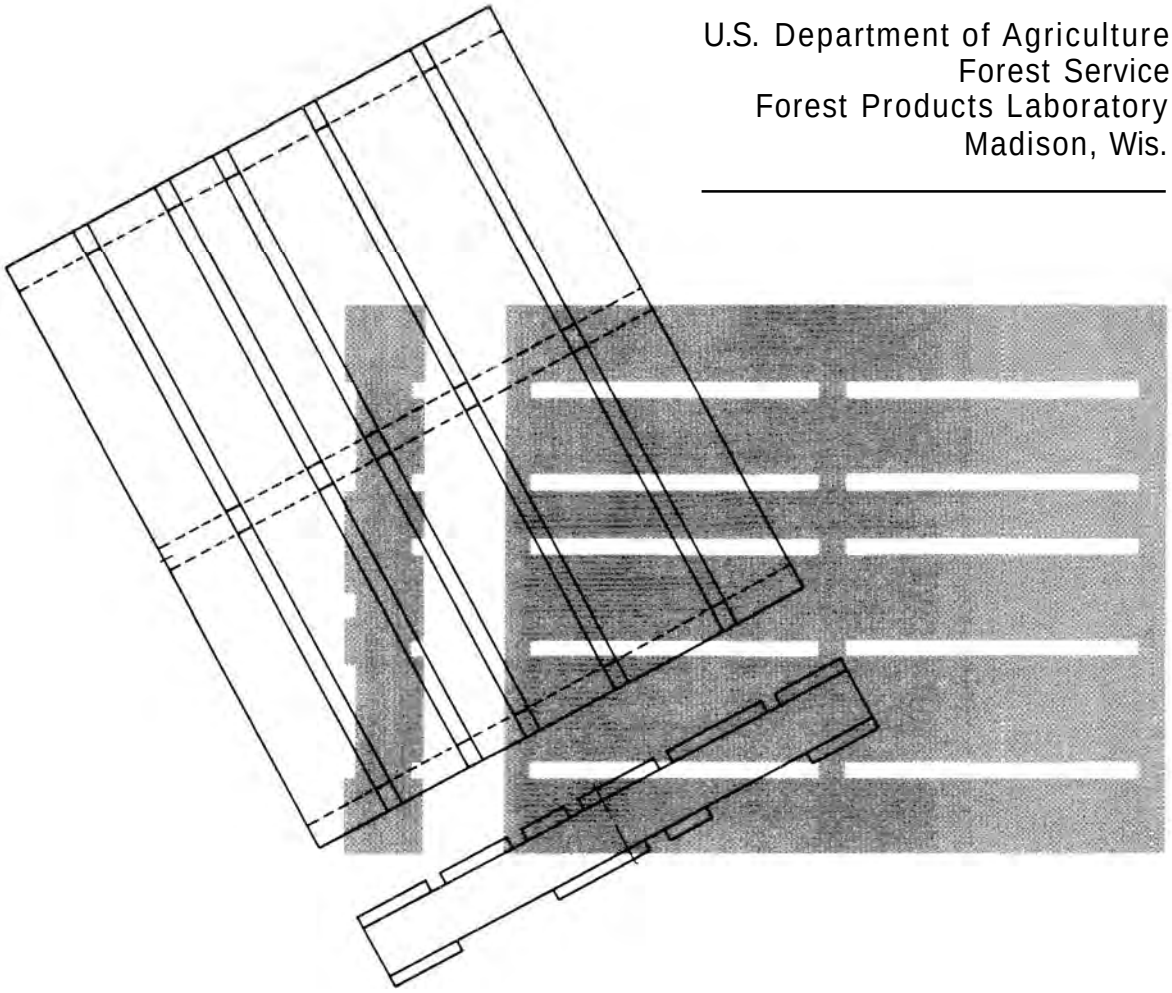

SUMMARY

This study, limited to yellow-poplar and hickory, considers the effect of different assembly methods and lumber characteristics on pallet performance.

Mastic assembly gave a promising if somewhat erratic performance and its use could lead to automated assembly and lower cost pallets. Helically threaded nails outperformed annularly threaded nails in the pallets, although the latter caused less splitting. Connector-type fasteners used in conjunction with nails added no improvement over conventional methods of fastening leading edge deck boards. The lack of heads contributed to the poor performance of plastic pins.

Various types of cutouts have more influence on the performance of four-way entry yellow-poplar stringers than on hickory stringers. Stringers with notches formed by nailing on blocks of low-grade material outperformed stringers with equal size sawn cutouts regardless of species.

Wane had the least influence on reducing performance of pallet parts when compared with simulated knots and slope of grain. Impact tests of leading edge deck boards showed that no material benefit would result from tightening the slope of grain restriction from 1 in 10 to 1 in 12.

Rough handling tests indicated that serviceable bin pallets of at least two designs can be fabricated from Appalachian hickory and yellow-poplar.

APPALACHIAN HARDWOODS FOR PALLETS:

Effect of fabrication variables and lumber characteristics on performance

By R. S. KURTENACKER, Engineer

Forest Products Laboratory[1]
Forest Service
U.S. Department of Agriculture

INTRODUCTION

As part of a program to promote and improve the economic growth of the area known as Appalachia, the U.S. Forest Products Laboratory, in cooperation with the Northeastern Forest Experiment Station and the station's Forest Products Marketing Laboratory at Princeton, West Virginia, conducted laboratory investigations concerning the use of local hardwoods in pallets.

The three most prevalent hardwoods of the area, yellow-poplar, hickory, and mixed oak, can be fabricated into suitable expendable and reusable pallets.[2]

In the research reported here, yellow-poplar and hickory were used to fabricate flat pallets, bin pallets, and simulated pallet assemblies which were evaluated to:

1. Establish performance characteristics of new fastening methods involving metallic and nonmetallic fastenings.
2. Establish the effect of notch shape and lumber characteristics in stringers of four-way entry pallets.
3. Determine the influence of knots, wane, and slope of grain on performance of leading edge deck boards.
4. Provide information on the potential of the species for bin pallets.

[1] Maintained at Madison, Wis., in cooperation with the University of Wisconsin.

[2] Kurtenacker, R. S., Heebink, T. B., and Dunmire, D. E. Appalachian Hardwoods for Pallets--A Laboratory Evaluation. U.S. Forest Serv. Res. Pap. FPL 76. 1967. Forest Prod. Lab., Madison, Wis.

MATERIALS AND ASSEMBLIES

The Forest Products Marketing Laboratory obtained and arranged for shipping sufficient quantities of rough, green yellow-poplar and hickory lumber. Upon arrival, material was randomly selected for the various end products and then machined and cut to size at the Forest Products Laboratory. Two types of flat and two types of bin pallets were fabricated.

The flat pallets were designed as follows:

1. Notched stringer design--48- by 40-inch modified four-way entry, double-face, nonreversible, flush stringer pallet as shown in figure 1.
2. Three stringer control design--40- by 48-inch, two-way entry, double-face, nonreversible, flush stringer pallet as shown in figure 2.

The bin pallet designs were approximately 48- by 48-inches square outside with an outside height of 34-1/2 inches. The inside measurements were approximately 45 inches square and 30 inches deep.

One design used yellow-poplar in a nailed wood configuration which in previous work[3] performed as well as any of eleven designs. These bins were made with nominal 1-inch-thick sawn material and had nominal 3- by 4-inch stringers. The sides and ends were fabricated with clinched nails and were assembled together and to the base with nailed-in-place galvanized sheet metal brackets

Figure 1.--Details of notched stringer pallets. (M 132 883)

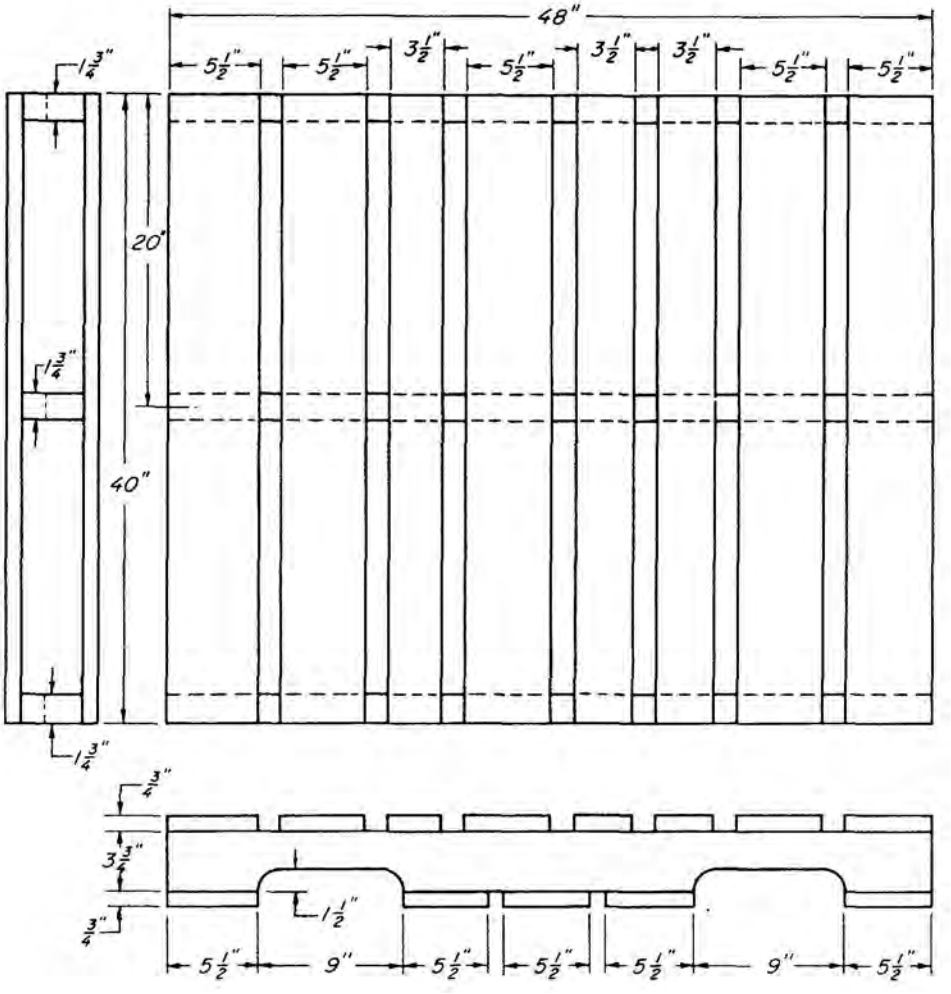

[3] Heebink, T. B. An Evaluation of Eleven Bin-Pallet Designs. U.S. Forest Prod. Lab. Rep. No. 2216. 1961. Madison, Wis.

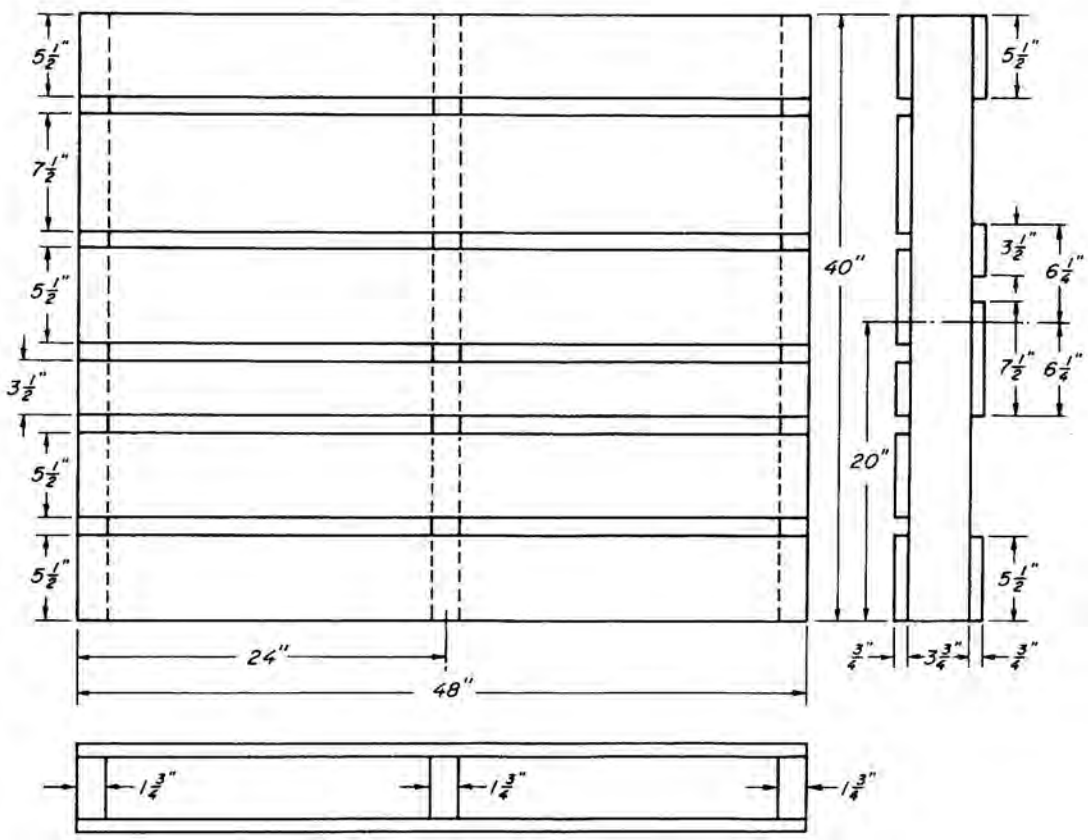

Figure 2.--Details of three-stringer control pallets. (M 132 884)

as shown in figure 3.

The other bin design used hickory. Veneer 3/8-inch thick remaining from a previous slice-wood pallet study[2] was fastened with clinched nails to nominal 1- by 2-1/4-inch horizontal cleats. Nominal 1-inch-thick deck boards were fastened with helically threaded nails to nominal 2- by 3-inch stringers to form the base. The bins were assembled with three horizontal bands--tensioned 3/4- by 0.020-inch flat steel strapping as shown in figure 4. The sides were nailed to the flat faces of the outside stringers with annularly threaded nails.

Except when controlled deviations were made to study the influence of lumber characteristics, pallet parts complied with the requirements for permissable defects for the proper class of wood member as stipulated in MIL-STD-731.[4]

The pallet nails, mastics, adhesives, and plastic fasteners were obtained from commercial sources. The double-pronged connector measured

Figure 3.--Nailed wood design of bin pallet made of yellow-poplar and loaded with 1,500 pounds of bagged corn. (M 133 675)

[4] Department of Defense. Quality of Wood Members for Containers and Pal lets. Military Standard 731. Dec. 9, 1959.

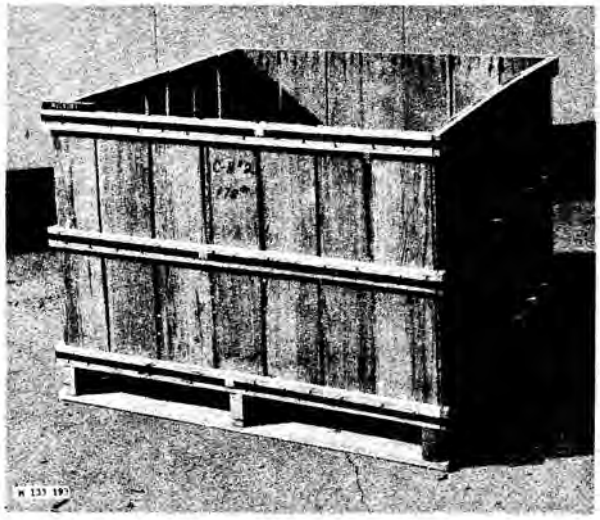

Figure 4.--Bin pallet made of hickory and designed to utilize veneer in sides and ends. (M 133 193)

2-1/2 inches long by 1 inch wide with eight prongs on each side. The prongs were about 1/2 inch long on one side and 5/16 inch long on the other. They were obtained from a commercial source and when used were oriented with the longer prong into the skid. The FPL experimental connector was handmade from steel sheet stock approximately 1/16-inch thick. These connectors were shaped like and were about the size of bottle caps, but instead of having a complete rim around the circle they had six triangular-pointed tabs about 1/4- to 3/8-inch long. A hole in the center permitted a nail to be driven through the connector (fig. 5). These connectors were used in pairs in conjunction with the two nails at the edge of the deck board. One connector was placed with the prongs into the skid and the other with them into the deck board.

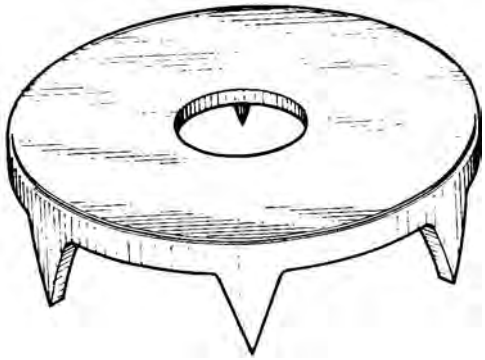

Figure 5.--Sketch of FPL experimental connector. (M 136 686)

PERFORMANCE CHARACTERISTICS OF FASTENING METHODS

To evaluate different fastening methods a pallet corner for both static and impact tests was fabricated as shown in figure 6. Most of the specimens were assembled green and then allowed to come to equilibrium moisture content of about 12 percent in a temperature of 68°F. and relative humidity of 65 percent. Some specimens assembled with adhesives were assembled with dry (12 percent moisture content) wood as well as green material.

The fastening methods evaluated were:

1. Three 2-1/2- by 0.120-inch helically threaded pallet nails.
2. Three 2-1/2- by 0.120-inch helically threaded pallet nails plus two FPL connectors. (Used only with yellow-poplar.)
3. Three 2-1/2- by 0.120-inch annularly threaded pallet nails. (Used only with hickory.)
4. Two 2-1/2- by 0.120-inch helically threaded pallet nails and one double-pronged commercial connector replacing the middle nail.
5. Synthetic elastomer sealant applied by calking gun in thicknesses of 1/32, 1/16, and 3/32 inch controlled by use of suitable wood shims.
6. Three 1-1/2- by 1/4-inch diameter polycarbonate rods driven into lead holes slightly smaller than rod diameter.
7. One-sixteenth-inch thick mercapton terminated butadiene acrylonitrile copolymer. Because this is a type of liquid synthetic rubber which becomes a resilient mass upon curing, it will be referred to as a synthetic rubber. (The thickness of this joint also was controlled by using wood shims.)

Pallet Corner Tests

Pallet corners were subjected to either a static compressive force applied at the apex (fig. 6) at a rate of 0.3 inch per minute by a universal testing machine or an impact compressive force generated by a 45-pound hammer falling from successively increasing height increments of 1 inch.

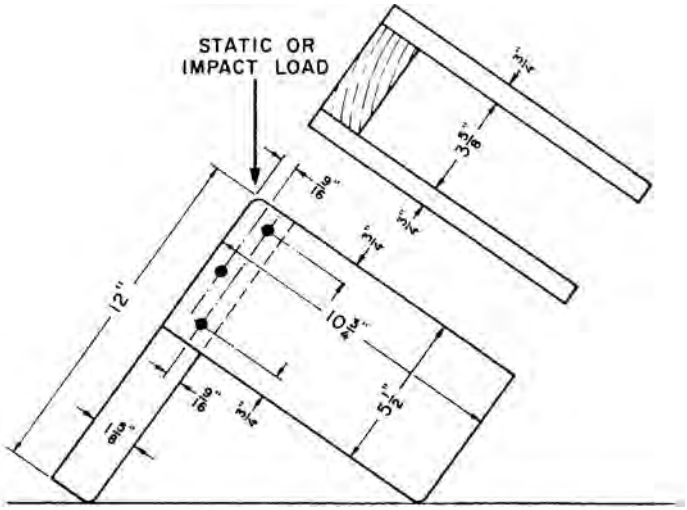

Figure 6.--Pallet corner used to evaluate fastening methods. (M 136 684)

Pallet Tests

Of the fastening methods studied, four were incorporated in the assembly of yellow-poplar and hickory 40- by 48-inch three-stringer control pallets: (a) fastener method No. 1, (b) fastener method No. 3, (c) fastener method No. 4, and (d) fastener method No. 5 with 1/32-inch-thick joints. Those pallets with metallic fasteners (a, b, and c) were assembled green and allowed to dry to an average moisture content of 7 to 9 percent before testing. The moisture content for pallets assembled with mastic (d) was between 7 and 9 percent. These pallets were stored for a time equal to the drying time of those assembled with green wood. Those pallets using method (c) only had the connector used in the joints of the leading edge deck boards.

The following evaluation procedures were used:

Revolving drum--This test provided a measure of the ability of a pallet to resist rough handling impact as simulated by falls in the 14-foot revolving drum (ASTM Standard D 782-60T). Because of the pallet's low profile, it usually skipped every other face of the drum and thus received only three falls per drum revolution per minute. The test was continued until three deck boards had been knocked completely off the pallet. The number of falls before loss of one, two, and three boards were averaged and arbitrarily used as the point of failure.

Cornerwise drop.--This test compared the average resistance of three replicates of pallets carrying a uniformly distributed 1,000-pound load to damage when the specimens were dropped in successive rotation on their bottom corners. Drops started from a height of 6 inches and increased by 6-inch increments after each four drops to a maximum height of 24 inches. If the pallet was serviceable after the 16 corner drops; four additional edgewise drops were made from 24 inches, one drop on each bottom edge.

It was arbitrarily decided that a 16-inch-long split in three stringers or deck boards (or combination) would determine the endpoint in this test.

Free fall on corner.--Pallets surviving the cornerwise-drop test were then subjected to the free-fall-on-corner test to determine the resistance to dynamic racking stresses in the plane of the pallet deck. Each pallet was given six falls on the same corner from a height of 40 inches. Before test and after each drop, measurements were made of each diagonal of both top and bottom decks. The average amount of racking was then calculated from the change in these four measurements.

Results and Discussion

Pallet corners.--The results of the static and impact loading of the pallet corners are given in tables 1 and 2. The data show that neither the FPL connectors nor the double-pronged connectors significantly altered performance.

Hickory pallet corners assembled with annularly threaded nails outperformed all similar corners assembled with metallic fasteners. This improvement was undoubtedly due in part to less initial splitting than that associated with the helically threaded nails. Failures of specimens with annularly threaded nails often involved broken nails, while the helically threaded nails did not break. Specimens with helically threaded nails failed by splitting at the nails and nails shearing from the deck board or pulling out of the stringer or through the deck board.

The polycarbonate rods gave erratic to poor performance: probably because they lacked heads.

The synthetic rubber used with dry material gave good performance in the static tests and was the best all around performing system in the impact tests. The material was rather difficult to handle and the specimens were assembled by the supplier. This, coupled with an insuffi-

Table 1.--Static compression performance of pallet corners

Fastening method[1]	Yellow-poplar[2]				Hickory[3]			
	Maximum load		Deflection at maximum load		Maximum load		Deflection at maximum load	
	Average[4]	Range	Average[4]	Range	Average[4]	Range	Average[4]	Range
	Pounds	Pounds	Inches	Inches	Pounds	Pounds	Inches	Inches
Three 2-1/2- by 0.120-inch helically threaded pallet nails (1)	1,220	+360 -300	1.4	+0.2 -0.3	1,380	+610 -580	1.2	+0.6 -0.5
Three 2-1/2- by 0.120-inch helically threaded pallet nails and two FPL connectors (2)	1,360	+360 -230	0.9	+0.3 -0.3	--	--	--	--
Three 2-1/2- by 0.120-inch annularly threaded pallet nails (3)	--	--	--	--	2,230	+450 -970	1.1	+0.1 -0.3
Two 2-1/2- by 0.120-inch helically threaded pallet nails and one double-pronged connector (4)	1,270	+190 -290	1.2	+0.3 -0.3	1,600	+270 -420	1.3	+0.2 -0.3
1/32-inch-thick synthetic elastomer sealant (5)	920	+1,100 -570	0.5	+0.1 -0.1	790	+310 -250	0.5	+0.2 -0.2
1/16-inch-thick synthetic elastomer sealant (5)	1,110	+500 -850	0.6	+0.2 -0.2	1,310	+210 -210	0.6	+0.2 -0.1
3/32-inch-thick synthetic elastomer sealant (5)	880	+520 -350	0.7	+0.1 -0.1	830	+320 -170	0.7	+0.1 -0.1
Three 1/4-inch-diameter polycarbonate rods (6)	670	+120 -90	0.5	+0.2 -0.1	900	+90 -60	0.5	+0.4 -0.2
1/16-inch-thick synthetic elastomer sealant[5] (5)	360	+270 -120	0.3	+0.2 -0.1	830	+230 -300	0.3	+0.1 -0.1
1/16-inch-thick synthetic rubber[5] (7)	1,070	+150 -190	0.7	+0.2 -0.2	1,230	+330 -380	0.6	+0.0 -0.1

[1] Numbers in parenthesis refer to description in text.

[2] Moisture content ranged between 7 and 13 percent.

[3] Moisture content ranged between 10 and 18 percent.

[4] Average of 10 specimens.

[5] Wood was dried before assembly. All others assembled with green wood and allowed to air dry.

cient supply of acceptable pallet parts, prohibited the material's use in full-size pallets.

The performance of the synthetic elastomer sealant was erratic and joint thickness did not appear to have a significant influence. The performance of the material with dry hickory and yellow-poplar was no better than with green wood. Some of the erratic performance could no doubt be attributed to the fact that it was a new material and handling and assembly techniques were different than those for conventional fasteners such as nails.

Pallet tests--revolving drum--The pallets using metal fastenings were made from green material at approximately 30 percent moisture content and had original weight of 59 to 66 pounds for yellow-poplar and 95 to 99 pounds for hickory. After drying, the moisture content measured by resistance-type meter was 7 percent for yellow-poplar and 9 percent for hickory. Average weight after drying was 43 pounds for yellow-poplar and 71 pounds for hickory.

Pallets assembled with adhesive were fabricated from material at about 7.5 to 9.0 percent

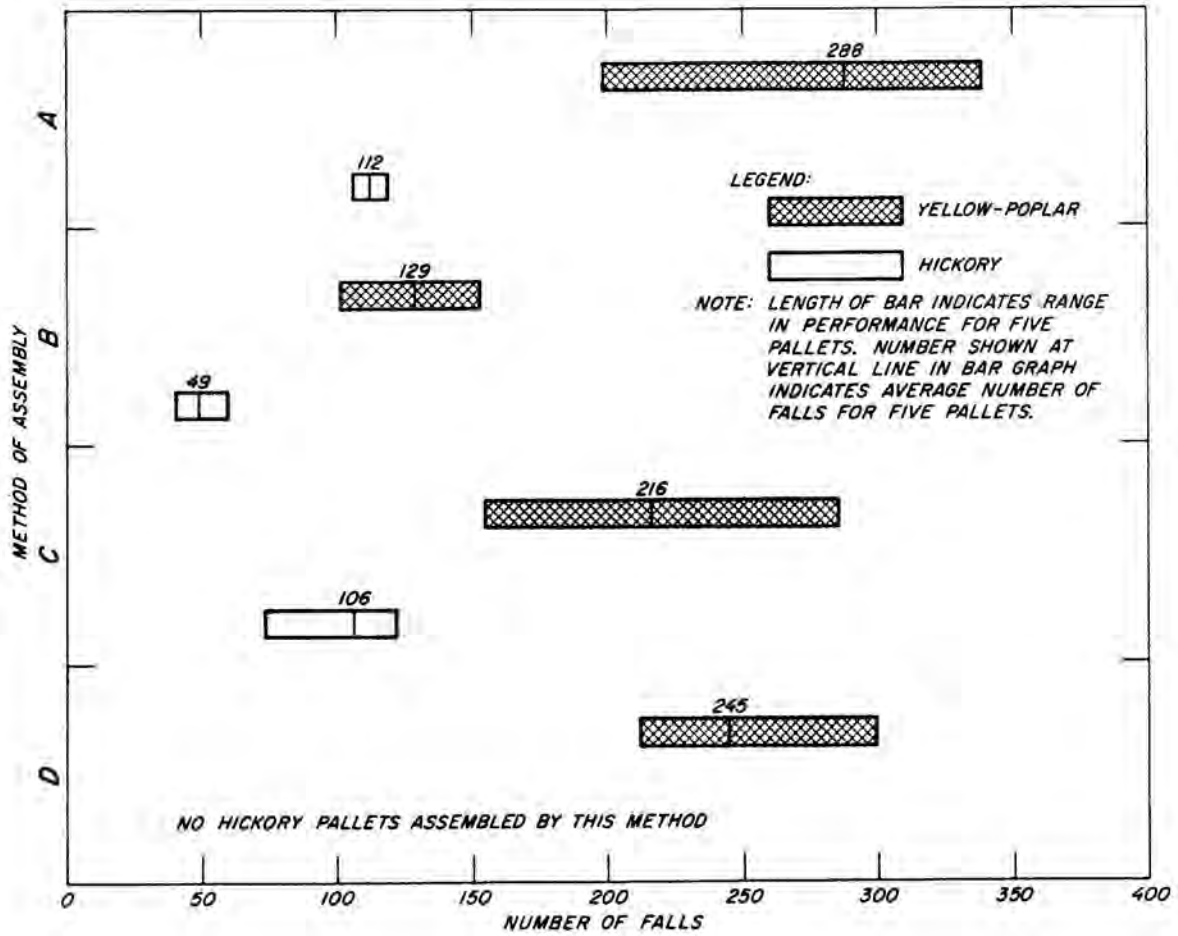

Figure 7.--Average revolving drum test performance of yellow-poplar and hickory pallets assembled by different methods. A, 2-1/2- by 0.120-inch helically threaded nails; B, 2-1/2- by 0.120-inch annularly threaded nails; C, 1/32-inch thick synthetic elastomer sealant; D, 2-1/2- by 0.120-inch helically threaded nails plus double pronged connector in leading edge deck boards. (M 136 683)

Thus, the hickory pallets because of their greater weight (60 percent heavier) have more work done upon them in any one fall in the drum than yellow-poplar pallets subjected to similar treatment. Another factor contributing to this difference in performance was that the hickory pallets developed considerably more splits at the nails during drying than did those of yellow-poplar.

Regardless of species, the annularly threaded nails resulted in less splitting during assembly and subsequent drying than did helically threaded nails, yet pallets fabricated with them did not perform as well as those assembled with helically threaded nails of the same size. The helically threaded nail, the synthetic elastomer sealant and the helically threaded nail with double-pronged connector in the leading edge deck boards resulted in pallets with similar performance levels.

Failures in the revolving drum test varied with the fastening method. For both species, helically threaded nails usually pulled through the deck board at splits, some sheared out at the ends of boards and a few broke. Annularly threaded nails generally broke with an occasional nail pulling through a split in the deck board. Annularly threaded nails broke at least 70 percent more frequently than did helically threaded nails.

Species or density influenced the failure associated with the synthetic elastomer sealant pallets. The hickory pallets exhibited a large percentage of cohesive failure (failure within the thickness of the glue line). This left the parts intact so that the pallet could be repaired either with more

Table 3.--Average racking in the free-fall-on-corner drop test expressed as a percentage of the original diagonal measurement of three stringer control pallets

Species	Fastening method							
	Three 2-1/2- by 0.120-inch helically threaded nail		Three 2-1/2- by 0.120-inch annularly threaded nail		1/32-inch-thick synthetic elastomer sealant		Two 2-1/2- by 0.120-inch helically threaded nail plus double-pronged connector[1]	
	Pounds[2]	Percent	Pounds[2]	Percent	Pounds[2]	Percent	Pounds[2]	Percent
Yellow-poplar	46	3.31	44	3.25	50	0	50	2.89
Hickory	71	5.77	74	6.50	77	0	(3)	(3)

[1] Leading edge deck boards only--rest with required number 2-1/2- by 0.120-inch helically threaded nails.

[2] Average weight of three pallets.

[3] No hickory pallets assembled in this manner.

adhesive or by predrilling for nails. The yellow-poplar pallets, being of lower density, had a considerable amount of wood failure. Often large pieces of the deck board or stringer were split or torn away. Damage to the wood pieces was such that reassembly with glues or metallic fasteners would be difficult and uneconomical.

Cornerwise drop.-All pallets were serviceable after the cornerwise drop test. There was some splitting of bottom deck boards, but there was no marked difference in appearance or performance that could be attributed to species or fastening method.

Free fall on corner.--All pallets that had been given the cornerwise drop test were then subjected to the free-fall-on-corner test. The average results for three replicates of each combination are given in table 3. The pallets assembled with the synthetic elastomer sealant had nopermanent deformation. These pallets were resilient and tended to bounce after impact. The double-pronged connector appeared to improve the resistance to distortion over that experienced with conventional pallet nails. There was little significant advantage for either of the two threaded nails. The weight of the pallets influenced the results--heavier pallets showed more average racking.

A check was made of broken nails. There was no practical difference between the number of broken annularly and helically threaded nails in the yellow-poplar pallets. In the hickory pallets, however, only an occasional helically threaded nail broke but an average of 21 annularly threaded nails broke per pallet.

EFFECT OF NOTCH SHAPE, KNOTS, AND WANE ON STRINGER PERFORMANCE

Simulated stringers and full-size pallets were evaluated to determine the effect of notch shape, knots, and wane on performance.

Test Procedures

Stringers.--Green stringers of both species, 48 inches long by 3-5/8 inches deep by 1-5/8 inches thick, with and without notches and simulated knots and wane were subjected to the standard

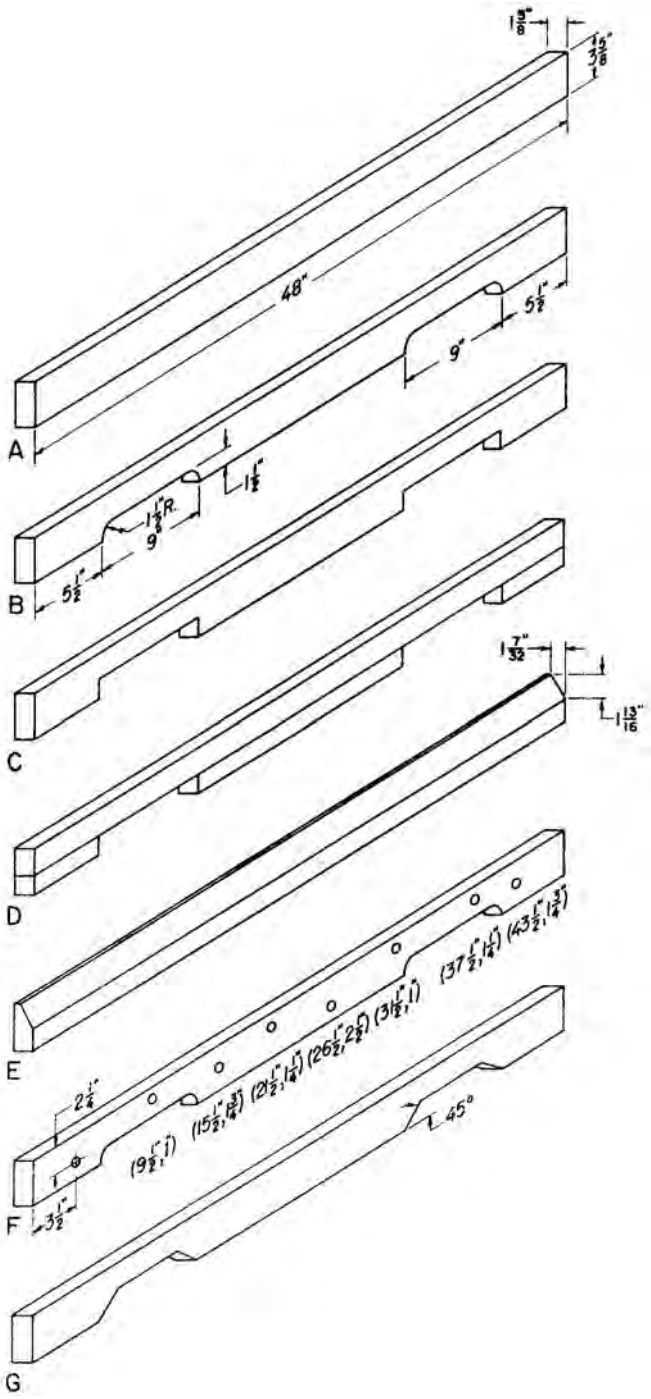

Figure 8.––Sketch of stringers with various types of notches and simulated knots and wane. A, solid stringer; B, curved cutout; C, square cutout; D, built-up notch (blocks nailed to substringer with 3- by 0.120–inch helically threaded nails); E, simulated wane; F, curved cutout with simulated knots; G, angle cutouts. The simulated knots in F are 1–1/4–inch diameter holes located as shown; the first measurement shown is from the left end of the stringer, the second is from the top edge. (M 136 688)

ASTM impact bending test.[5]

All notches were the same relative size and located in the same relative position. Actual outlines are shown in figure 8. To simulate wane (bark or lack of wood from any cause on the corner or edge of a piece), material was removed from the stringer (see fig. 8, E). It was impossible to find suitable pieces with adequate number and size of knots, so these were simulated bydrilling 1-1/4-inch-diameter holes through the stringers as shown in figure 8, F. There may be some question as to whether these holes adequately simulate knots, because in normal conditions the wood grain diverges around the knot and often creates some severe local cross grain. On the other hand, this divergence of grain may tend to reduce local high stress concentration created with the sharp and abrupt cutting of the wood grain associated with the drilling of holes.

Pallets.--To check performance of pallets with various shapes of stringer notches, green hickory and yellow-poplar pallets were fabricated similar to those illustrated by figure 1. The difference was that the notches were either square cut or formed by nailing suitable blocks to a substringer (fig. 8, C and 8, D). There were three replicates for each species and type of notch. After air drying to about 12 percent moisture content, the pallets were subjected to the cornerwise drop test.

In an effort to learn something about the influence of knots in stringers on pallet performance, three stringer control pallets (fig. 2) were made from green hickory, air dried to about 12 percent moisture content, and subjected to the revolving drum test, cornerwise drop test with 1,000 pound uniformly distributed load, and the free-fall-on-corner test. To simulate knots, holes 1-1/4 inches in diameter were drilled through the face of the stringers located as follows where first dimension is distance to center of hole from left end of stringer and second dimension is distance in inches to center of hole from top of stringer: (3, 1-1/4) (10, 2-3/8) (16-1/2,1-1/4)(23-1/2, 2-3/8) (30, 1-1/4) (37, 2-3/8). Not enough yellow-poplar was available to make similar pallets.

Results and Discussion

Stringers.--The results of impact bending tests are given in descending order in tables 4 and 5. With both yellow-poplar and hickory, the plain stringer had the best performance followed by those with wane, and then the stringers with built-up square notches. The hickory stringers showed no significant difference between the average performance of the curved, square, or

Table 4.--Average results in descending order of various yellow-poplar stringers Subjected to impact bending

Stringer	Height of drop of 50-pound hammer to cause failure		
	Minimum	Maximum	Average[1]
	Inches	Inches	Inches
Plain	23	37	30.
Simulated wane	12	32	22
Built-up square notch	8	23	17
Curved cutout	13	17	15
Curved cutout with knots	3	6	5
Square cutout	2	9	4
Angle cutout	1	3	2

[1]Average for five stringers.

Table 5.--Average results in descending order of various hickory stringers subjected to impact bending

Stringer	Height of drop of 50-pound hammer to cause failure		
	Minimum	Maximum	Average[1]
	Inches	Inches	Inches
Plain	54	[2]30@62	[3]27@62
Simulated wane	25	[2]30@62	7@62
Built-up square notch	29	60	44
Angle cutout	28	36	[4]30
Curved cutout	18	33	28
Square cutout	11	53	28
Curved cutout with knots	12	30	18

[1]Average for five stringers.
[2]Thirty drops from 62 inches without failure.
[3]Average of 27 drops from 62 inches without failure.
[4]Average of four stringers.

[5]American Society for Testing and Materials. Standard Methods of Testing Small Clear Specimens of Timber. ASTM D 143-52. p. 85.

angle cutout types. In tests of yellow-poplar stringers, the curved cutout type outperformed the square cutout and angle cutout stringers. The addition of the simulated knots significantly reduced the stringer's performance for both species.

Regardless of species, the type of failure for the plain, simulated wane, and built-up square notch stringers was the same. These failures could be described[6] as splintering or brash tension or both. The failure for all other stringers was splitting along the grain beginning at the corner of the cutout and following the natural grain of the wood. With the presence of simulated knots, the splits went from the notch through one or more holes.

Pallets.--Both hickory and yellow-poplar pallets with built-up square notches outperformed similar pallets with curved cutout notches or square cutout notches. Yellow-poplar pallets with stringers having square cutout notches failed by splitting of the stringers at the notches at either the second or third cornerwise drop from 6 inches. Those with curved cutout notches[7] failed during the 18- or 24-inch cornerwise drop. Two pallets with built-up square notches failed at the third 24-inch cornerwise drop and one survived all of the cornerwise drops plus the four 24-inch edge drops.

With the hickory pallets, the square cutout notch failed on either the fourth 24-inch cornerwise drop or the second 24-inch edge drop, while those with curved cutout notches failed at the first 24-inch cornerwise drop. Those with built-up square notches survived all of the cornerwise drops and the four 24-inch edge drops and were still serviceable. These pallets had some pulling of the nails holding the blocks to the stringer-board.

These latter pallets were subjected to the free-fall-on-corner test and had an average racking exvressed as a percentage of the original diagonal measurement of 4.25 percent, which compares favorably with other hickory pallets subjected to this procedure.

The average revolving drumperformance of five hickory pallets with simulated knots in their stringers was 170 falls; the poorest sustaining 125 falls and the best 192 falls. This compared favorably with the 180 fall average for the hickory three-stringer control pallets in a previous study.[2]

Three hickory pallets with simulated knots in the stringers and carrying a 1,000 pound uniformly distributed load withstood all of the 24-inch cornerwise drops plus four additional edgewise drops from 24 inches and were still serviceable. Damage amounted to an occasional split not exceeding 4 inches in length in two stringers.

Because these three pallets were still serviceable, they were subjected to the free-fall-on-corner test which resulted in an average racking of 3.5 percent of the original diagonal measurement. These results compare favorably with other hickory pallets. The only visible damage was an occasional split of 3 to 6 inches, generally at a nail. These pallets had an average weight of 73 pounds.

PERFORMANCE OF LEADING EDGE DECK BOARDS

A system that simulated forklift truck impact against the top leading edge deck board of a pallet was developed and used to measure the performance with various fastening systems, slope of grain, and simulated knots and wane. A modified pallet consisting of shortened stringers and full-size leading edge top deck boards was used in conjunction with the incline impact tester to provide an impact force against the midpoints of the top leading edge deck boards,

To develop this method it was necessary to arbitrarily establish levels of severity for the impact force. A performance level of approximately 15 impacts from a given distance was established, so that comparisons both above and below this level might be possible. A simple analysis of the incline impact tester was made disregarding the effects of friction and air drag on the movin dolly. This analysis was based on the formula[5]

[6] ASTM D-143-52, paragraph 51.

[7] Appalachian Hardwoods for Pallets--A Laboratory Evaluation, p. 16.

[8] Mlarks. L. S. Mechanical Engineers' Handbook. 5th Ed. New York. McGraw-Hill 1951. P. 201.

for a body falling freely from rest, $v = \sqrt{2gh}$

where v = velocity in feet per second

g = acceleration due to gravity = 32.2 feet per second per second

h = height in feet.

Figure 9 is a sketch of the incline impact tester used to permit approximate calculations of the speed of the dolly at impact for variousdistances up the track from the backstop to the front edge of the dolly.

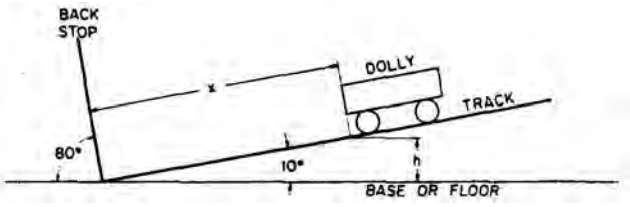

Figure 9.--Sketch for use in calculating speed of dolly. (M 136 685)

x = distance from point of impact to leading edge of dolly measured parallel to the track.

h = calculated vertical height for distance x = x sin 10°.

From this it can be seen that if x is measured in inches, h, in feet, $= \frac{x \sin 10°}{12}$ and by substitution and simplifying $v = 0.965\sqrt{x}$ feet per second.

Further, 1 mile per hour equals 1.47 feet per second. Therefore, theoretical velocity of dolly at impact in miles per hour is $\frac{0.965\sqrt{x}}{1.47} = 0.656\sqrt{x}$.

The incline impact tester dolly was modified to weigh 525 pounds and the front was fitted with two steel blocks measuring 4 by 3 by 2 inches as shown in figure 10. The steel blocks were to simulate the back portion of the forks of a forklift truck and were arranged to impact the leading edge of the top deck board midway between the stringers. The calculated potential energy of the dolly when raised a given distance, x, up the track may be found by multiplying the weight of the dolly by the vertical height, expressed as follows: potential energy $= \frac{Wx \sin 10°}{12}$, where potential energy is in foot-pounds.

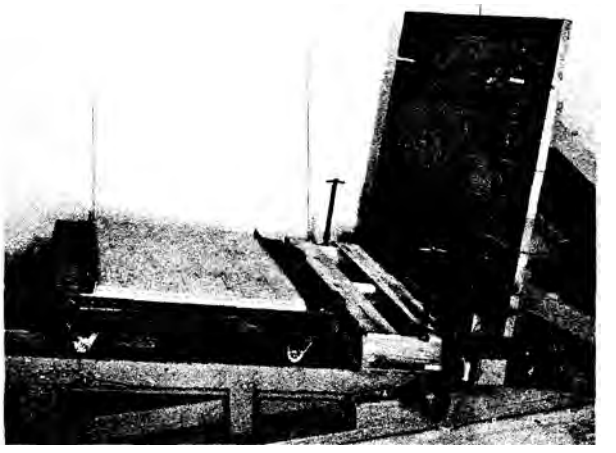

Figure 10.--Modified incline-impact tester dolly weighing 525 pounds and simulated pallet with shortened stringers and full size leading edge top deck boards ready for impact test to investigate performance of various deck board fastening methods and simulated wane, knots, and slope of grain. (M 133 391)

W = weight of dollyinpounds = 525

x = distance in inches from point of impact to leading edge of dolly measured parallel to the track

potential energy $= \frac{525 \times 0.1736x}{12}$

= 7.60x foot-pounds

The following tabulation gives various values of potential energy per impact and approximate velocity at impact for various distances up the track.

Distance (x) (In.)	Potential energy (Ft.-lb.)	Velocity (M.p.h.)
6	45.6	1.61
9	68.4	1.97
12	91.2	2.27
15	111.4	2.54
18	136.8	2.78

Procedure--fastening methods.--With the short pallet in position against the backstop, the dolly was raised up the track a predetermined distance. By means of a quick release mechanism the dolly was allowed to travel down the track and impact

the leading edge deck board.

Exploratory work indicated that results might be rather variable, and initial distances of 6 inches for yellow-poplar and 9 inches for hickory were established. If the hickory specimens withstood 20 impacts from 9 inches, the distance was increased to 12 inches and continued until failure or a total of 120 impacts. Yellow-poplar specimens were also tested until failure or until they had received a total of 120 impacts. A broken deck board, or a board dislodged or displaced at least 1-1/2 inches at two of the three stringers was considered failure.

The variables are indicated by the captions used in table 6. Both species were used and the short pallets were assembled and tested at various moisture conditions as indicated in table 6. With dry material, preboring at about 80 percent of the nail diameter was used to reduce splitting to a minimum. All deck boards were nominal 6 inches wide, except for one series where the leading edge deck board consisted of two nominal 4-inch-wide boards. When fastened with metallic fasteners, the nominal 6-inch-wide deck boards had three fasteners per joint and the nominal 4-inch-wide boards had two fasteners per joint. Those specimens with the double-pronged connector had two helically threaded pallet nails per joint, one located at each edge and the double-pronged connector in place of the center nail in a nominal 6-inch-wide board. With the hickory specimens it was necessary to prebore a small hole for each of the prongs in order to have the connectors drive properly without bending.

Procedure--slope of grain and simulated knots and wane.--Using the same impact method, an effort was made to investigate the performance of both species in nominal 6-inch-wide leading edge deck boards containing several slopes of grain and simulated knots and wane.

Slope of main.--Efforts were made to study slopes of grain of 1 in 8, 1 in 10,[4] and 1 in 12. Half width pallets and one point of impact were used. This permitted cutting nominal 6-inch-wide pieces with a controlled amount of slope of grain from nominal 8-inch-wide boards. There were 10 replicates for each slope of grain.

Wane.--The specimens were machined in two groups to produce: (1) Simulated wane equal to three-fourths of the thickness of the board and one-fourth of the width,[4] (2) simulated wane equal to three-fourths of the thickness and one-half of the width. Short pallets using each type of specimen were assembled so that simulated wane was away from impact as well as toward impact. There were five replicates for each position.

Knots.--Simulated knots were made by drilling holes at various locations. Each deck board had six 2-inch-diameter holes or six 2-3/4-inch-diameter holes located as follows: center of hole (4 inches, 2-3/4-inches) (12 inches, 2 inches) (20 inches, 3-1/2 inches) (28 inches, 2 inches) (36 inches, 3-1/2 inches) (44 inches, 2-3/4 inches) where the first dimension is the distance from the left end of the deck board and the second dimension is the distance from the top edge. There were 10 replicates for each species and size of simulated knot.

Table 6.--Average[1] number of inclined impacts to failure for various combinations and methods of fastening pallet leading edge deck boards to stringers

Species	Assembly conditions		Test conditions	2-1/2- by 0.120-inch helically threaded nail			2-1/2- by 0.120-inch annularly threaded nail			Synthetic elastomer sealant			Helically threaded nails plus double-pronged connector		
	Stringers	Deck boards		Minimum	Maximum	Average	Minimum	Maximum	Average	Minimum	Maximum	Average	Minimum	Maximum	Average
Hickory	Green	Green	Green	7	61	27	22	120	55	--	--	--	--	--	--
Do.	do.	do.	Dry	2	38	19	2	9	5	--	--	--	5	8	6
Do.	Dry[2]	Dry[2]	Dry	23	120	66	7	24	17	11	33	24	11	25	18
Do.	Green	Dry[2]	Green	23	48	33	40	85	58	--	--	--	--	--	--
Do.	do.	Green[3]	Dry	45	120	90	--	--	--	--	--	--	--	--	--
Yellow-poplar	Green	Green	Green	11	37	19	8	58	24	--	--	--	--	--	--
Do.	do.	do.	Dry	8	120	45	5	24	11	--	--	--	5	11	7
Do.	Dry[2]	Dry[2]	Dry	24	120	59	6	35	21	18	120	75	9	34	19
Do.	Green	Dry[2]	Green	15	51	24	8	119	69	--	--	--	--	--	--
Do.	do.	Green[3]	Dry	120	120	120	--	--	--	--	--	--	--	--	--

[1] Average is for six replicates.

[2] Material prebored to minimize splitting.

[3] Two nominal 4-inch-wide deck boards.

Results and Discussion

Fastening methods. --The performance data for the various fastening methods when leading edge deck boards were subjected to impact is given in table 6. There was a wide variation in results.

The annularly threaded nails tended to outperform the helically threaded nails when tested shortly after driving or when the deck boards were in the "green" condition. If there was any drying of the specimen, or if the specimens were prepared from dry material the helically threaded nail tended to give better performance.

The use of a double-pronged connector is of no benefit for fastening leading edge deck boards. The synthetic elastomer sealant appears to approach the performance of the helically threaded nails, especially with yellow-poplar.

The use of two adjoining nominal 4-inch-wide deck boards gave the best performance for both species. This is undoubtedly due, in part, to the extra nail at each stringer joint. Many of the failures involved only one of the two nominal 4-inch-wide boards. This could be of economic importance in making repairs, because one nominal 4-inch-wide board would be cheaper than one nominal 6-inch-wide board and fewer nails would be needed to replace a single 4-inch-wide board.

The failures varied with the species and with the fastener. The annularly threaded nails tended to reduce splitting, but they also tended to break more frequently than the helically threaded pallet nails of similar size. Hickory tended to develop more splits than yellow-poplar during assembly

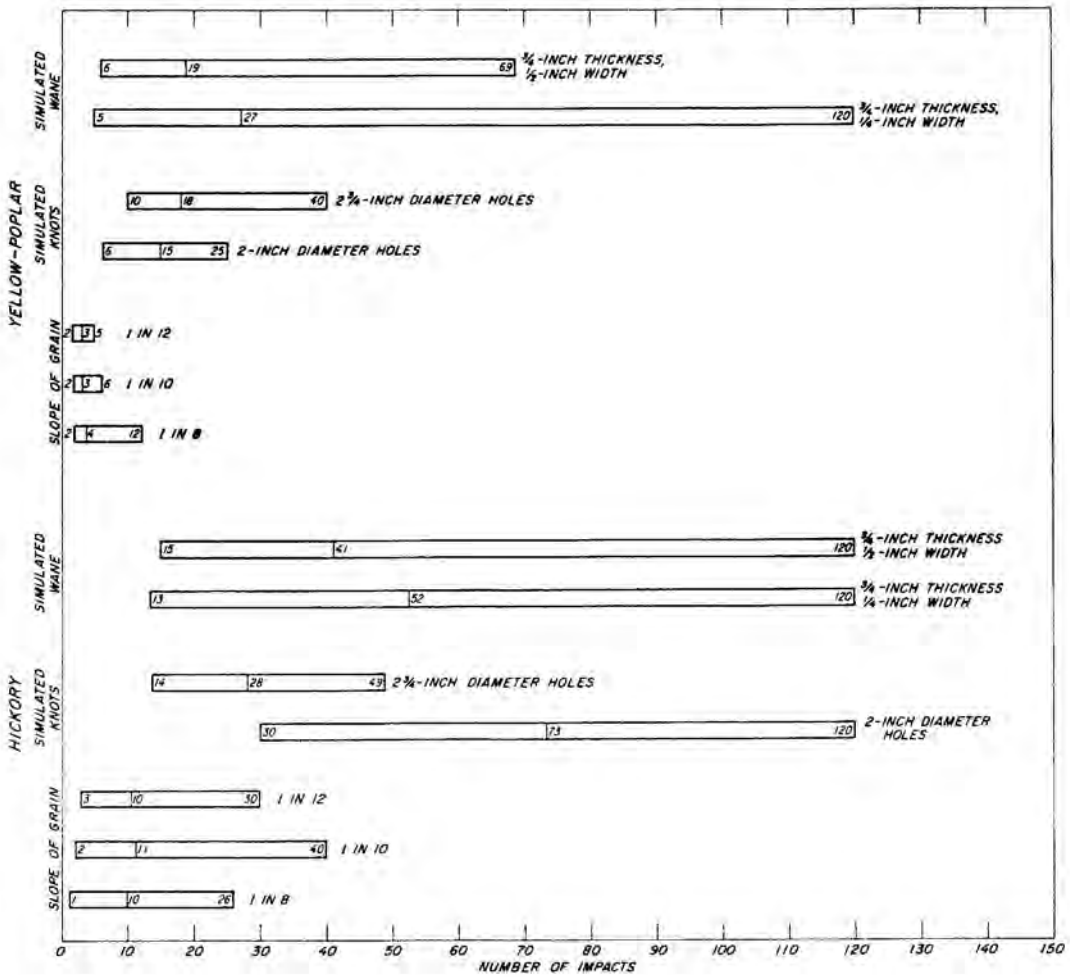

Figure 11.--Impact performance of leading edge deck boards, considering slope of grain and simulated knots and wane. Length of each bar indicates range in performance, numbers at bar extermities indicate minimum and maximum values, vertical line and number in bar indicates average performance. (M 036 687)

and also in those test specimens that were dried. There was evidence of nail popping in specimens subjected to drying regardless of species. Splits developed at the nails and sometimes extended the full length of the deck board or else followed the grain of the wood, nailheads pulled through splits in deck boards, nails pulled from the stringers, and in hickory the nail pull was often associated with split stringers.

In the yellow-poplar, nailheads pulled through the deck board. With the synthetic elastomer sealant, the failures were practically all cohesive in nature regardless of species.

Slope of grain and simulated knots and wane.--The results of this series of tests of impact performance of leading edge deck boards are given in bar graph form in figure 11. With similar slope of grain and simulated knots and wane, hickory outperformed the lower density yellow-poplar. There is a wide range of performance for all variables, except possibly with slope of grain in yellow-poplar.

Regardless of deck board quality or the species, the type of failure tended to be the same. It was characterized by splits developing at the nails and subsequently the heads of the nails pulling through or shearing from these splits.

Slope of main.--Slope of grain appears to have the most harmful effect on the performance of leading edge deck boards. For the range investigated, there was no significant difference in the average performance within a given species. Thus there does not appear, on the basis of these tests, any justification for increasingthe restriction on the slope of grain from 1 in 10 to 1 in 12.

Knots.--In hickory, simulated knots 2-3/4 inches in diameter were more detrimental than 2-inch-diameter knots. In yellow-poplar, both sizes of knots were about equally detrimental to the performance of the deck boards.

Wane.--Wane had the widest range and least influence on performance. Further, it appears that as the amount of wane increases, the level of performance tends to decrease.

When the edge containing the wane was exposed to the impact, more crushing and indentation was evident, This was true for both species, but hickory was more resistant to this crushing than yellow-poplar.

POTENTIAL OF THE SPECIES FOR BIN PALLETS

Throughout the United States there is a continued interest in the use of bin pallets for handling agricultural commodities and manufactured goods. Thus, it seemed reasonable to consider these two Appalachian hardwoods in bin pallet applications.

Procedure.--Two sets of three bins of each design or species were subjected to the test cycle. One set of bins was assembled with green material (except for the veneer which was dry), while the other set was assembled from dry material. Both sets were allowed to air dry and weather for 3 to 4 months before being subjected sequentially to the following test series:

Racking.--To get a measure of the stiffness of each bin in the horizontal plane, the racking test was conducted on empty bins both before and after the rollover test. By mechanical means, a force of 150 pounds as measured by a dynamometer was applied to one pair of diagonally opposite top corners. The diagonal distance from corner to corner was measured both before and after application of the force. Similar measurements were taken with the force applied across the other diagonal to obtain the average change in the diagonal measurements.

Rollover.--To simulate the manner in which bins are positioned in use, each was subjected to a side-to-end rollover test on concrete. The empty bin, placed upon one face, was rotated to just past the point of balance and allowed to fall freely on the adjacent face. This was repeated 16 times.

Sag.--For this and the remaining tests each bin was loaded level full with 1,500 pounds of bagged corn (fig. 3). The bin was then diagonally oriented along a timber allowing the two unsupported corners to deflect with respect to the other. This simulates placing the bin on an uneven surface. After measuring the amount of sag, the bin was rotated 90° so that the other two corners were unsupported and another set of sag readings obtained. The two readings were averaged.

Vibration.--The vibration test, simulating vibrations encountered in transit, was conducted on the Forest Products Laboratory package vibration tester operating at a frequency of about 9 cycles per second and a peak-to-peak amplitude of 1/4 inch. Each loaded bin was vibrated for 10 minute increments and measured for bulge after each increment until the bin had received a total of 30 minutes vibration.

Pendulum-impact.--Each loaded bin was subjected to the pendulum-impact test by placing the bin on the suspended platform with the front edge of the bin extending 10 inches beyond the platform. The platform was pulled back horizontally until it was elevated 9 inches vertically; then released and allowed to swing freely, striking the large concrete bumper (fig. 12). Bin sides and ends tend to rack out of square. The resistance to this stress was determined by measuring the diagonals in the plane of racking and calculating the change in dimensions due to impact. Each bin was given four impacts--one against each side and end.

Cornerwise drop.--To evaluate the overall capability of the bins, they were subjected to the cornerwise drop test. This test with loaded bins was similar to the previously described flat pallet cornerwise drop test.

Results and Discussion

The green bin pallets lost considerable weight during the storage period. Those of yellow-poplar dried from an average of 163 pounds per bin to an average of 142 pounds. The hickory bins dried from an average of 179 pounds to an average of 156 pounds. Those bins assembled dry weighed about the same as the green bins in the dry condition.

Racking--The results of this test with 150 pounds of force, both before and after the roll-

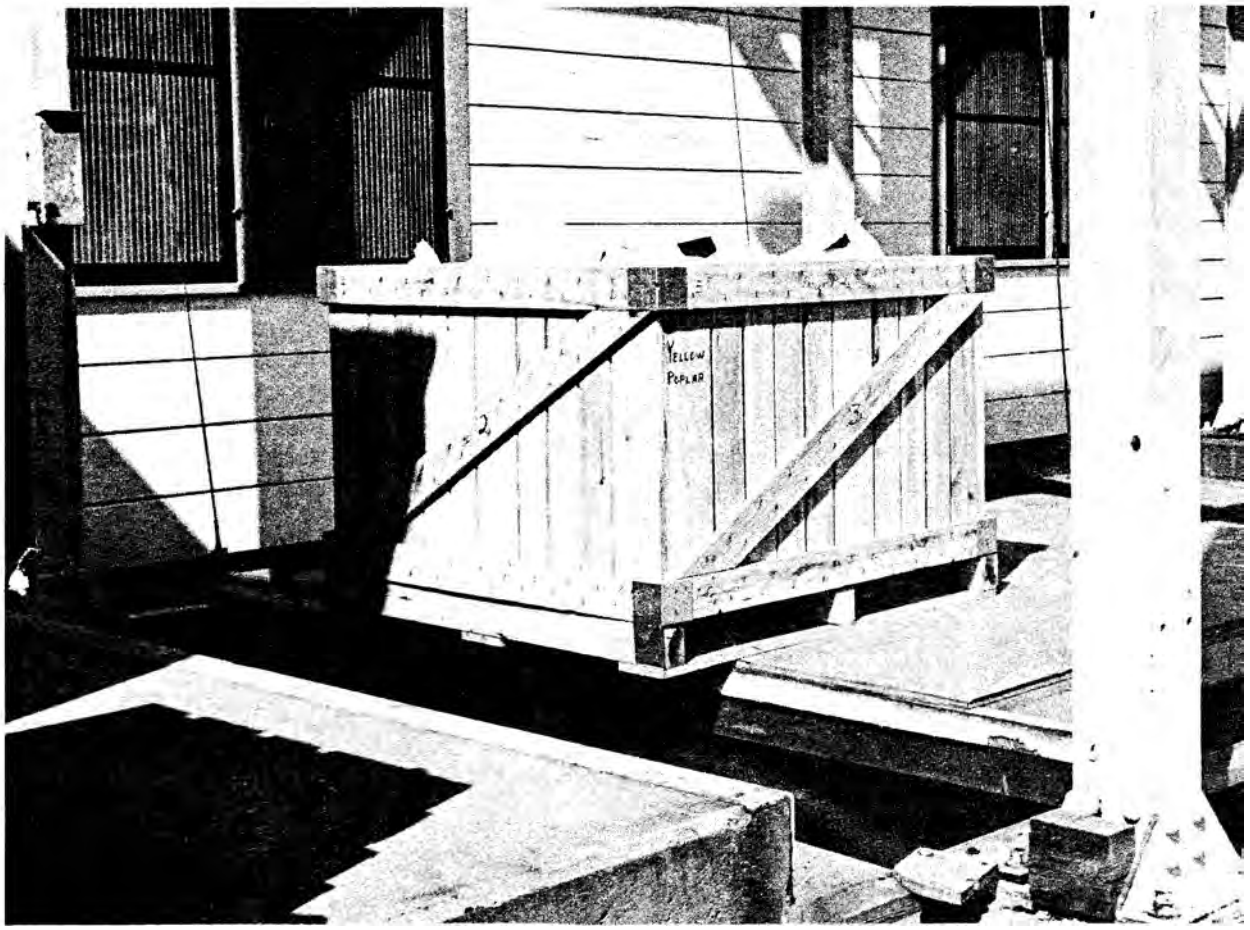

Figure 12.--Method of conducting pendulum impact test of bin pallets. (M 134 805-7)

over test, were:

Species	Assembly condition	Average change in corner-to-corner measurement	
		Before rollover (In.)	After rollover (In.)
Yellow-poplar	Green	2.2	2.4
Yellow-poplar	Dry	1.8	2.2
Hickory	Green	4.7	4.9
Hickory	Dry	2.5	2.8

These results show that bins made of dry material are more resistant to racking than are bins made of green wood and allowed to air dry.

Rollover.--Visual inspection revealed no apparent damage or deterioration of the bins. However, some general loosening of the bins occurred, because the average change in diagonal corner-to-corner racking test measurements was slightly higher after the rollover test than before it.

Sag.--The sag test results were not too consistent nor did they reveal any glaring weaknesses in the bins. The average vertical deflection for two unsupported top corners was 0.50 inch for the bins assembled from green wood. For bins made from dry material, this figure was 0.2 inch for yellow-poplar and 0.6 inch for hickory.

Vibration.--All bins, regardless of species or condition of material, successfully passed this test, although bulging was progressive and the maximum was at the bottom edge of the bin. For the green yellow-poplar bins, the maximum bulge ranged between 0.25 and 0.50 inch. For those assembled from dry material it was less--not exceeding 0.17 inch.

The green hickory bins had an average bulge of 0.3 inchwhilethose assembled from dry hickory only had half as much--0.15 inch.

Pendulum impact.--None of the yellow-poplar bins escaped without some damage in this test and there was no significant difference in performance regardless of whether or not the bin was assembled from green or dry material. Damage was breaking of top horizontal cleats, One bin in each of the yellow-poplar groups failed when the bottom horizontal cleat broke and permitted excessive bulging.

All of the hickory bins survived the pendulum impact test regardless of whether they were assembled green or dry. Generally, there was some visible damage such as a top horizontal cleat which broke in the middle due to apparent bending. Bulging was noticeable around the top and one bin developed a broken band, but all were considered serviceable.

Cornerwise drop.--Only two yellow-poplar bins assembled green were available for this test. Of these one failed after the second cornerwise drop from 18 inches while the other survived all of the drops and was still serviceable. Also, there were only two yellow-poplar bins assembled with dry material available for this test. Although these two bins experienced additional damage, they were still considered serviceable.

Of the three green hickory bins, one failed on the second drop from 12 inches when staples pulled from the top band and the strap slipped over the corner at the top, permitting the contents to spill. The remaining two bins were still serviceable as were the hickory bins made with dry material, although they sustained some additional damage.

●●●

CONCLUSIONS

The labobratory evaluation indicates that the use of synthetic elastomer sealant in pallet fabrication is promising and that there is no apparent difference in performance within the limits of glue line thickness investigated--1/32, 2/32, and 3/32 inch. Economics would naturally dictate use of the minimum joint thickness. The synthetic rubber exhibited capabilities in the tests of pallet corners that warrant further consideration for pallet applications. Moisture content of the wood was more critical with this material than with the other systems used in the study.

Throughout the study, the use of annularly threaded nails reduced the occurrence of splitting, but they had a greater tendency to break during test than the helically threaded nails. Use of a double-pronged connector with two helically threaded nails gave satisfactory performance and tended to improve resistance to distortion but economic factors and assembly difficulty are such that this technique cannot be recommended because the overall rough handling performance showed no marked improvement over conventional fastening techniques.

In the rough handling tests, pallets made of yellow-poplar tended to outperform the hickory pallets, which was also noted in previous work, but it appears quite certain that the difference in weight of the two species has some influence on performance. The density influenced the type of failure that occurred in the mastic systems. With high-density species, a cohesive failure appears characteristic while with a low-density species there is a considerable amount of wood failure. Species or density appeared to influence The breaking of annularly threaded or helically threaded nails. In the yellow-poplar pallets there was no practical difference in the number of the two kinds of broken threaded nails, but in hickory a considerably greater number of annularly threaded nails were broken. Thus, during service of pallets made from dense species, annularly threaded nails have a greater tendency to break than do helically threaded nails of similar size.

Wane does not appear to have serious effect on strength of stringers, but excessive wane might interfere with nailing or fastener systems. Knots are detrimental in a stringer regardless of species, but in dense species their influence in overall pallet performance is not as great as in low-density species.

The shape of the cutout has less influence on performance in those stringers from high density woods than those of low density. In low-density species, the curved cutout notch is better than the square or angle cutout notch. Regardless of species, the formation of notches by nailing proper sized blocks to a full length stringer board gave better performance than similar sized stringers with similar size cutout notches regardless of shape.

In leading edge top deck boards, two 4-inch-wide boards adjoining each other should outperform a single nominal 6-inch leading edge deck board. Slope of grain in leading edge deck boards is more detrimental than knots and wane. However, there does not appear to be any justifiable reason for tightening the restrictions on slope of grain. Any such increase would certainly work a hardship with pallet producers and, as indicated in this study, increasing the slope restriction to 1 in 12 would not materially improve performance. If possible, the best quality boards should be used as leading edge deck boards, but if it is necessary to use a board with wane, the wane should be placed to the inside to reduce crushing and indentation.

Additional work should be considered to study the influence of knots, slope of grain, etc., but one of the biggest difficulties is control of these variables and eliminating all except the one under investigation.

Judging by their overall performance, serviceable bin pallets of at least two designs may be produced from the most prevalent of the Appalachian hardwoods.

ABOUT THE FOREST SERVICE. . . .

As our Nation grows, people expect and need more from their forests--more wood; more water, fish and wildlife: more recreation and natural beauty; more special forest products and forage. The Forest Service of the U.S. Department of Agriculture helps to fulfill these expectations and needs through three major activities:

* Conducting forest and range research at over 75 locations ranging from Puerto Rico to Alaska to Hawaii.

* Participating with all State forestry agencies in cooperative programs to protect, improve, and wisely use our Country's 395 million acres of State, local, and private forest lands.

* Managing and protecting the 187-million acre National Forest System.

The Forest Service does this by encouraginguse of the new knowledge that research scientists develop; by setting an example in managing, under sustained yield, the National Forests and Grasslands for multiple use purposes; and by cooperating with all States and with private citizens in their efforts to achieve better management, protection, and use of forest resources.

Traditionally, Forest Service people have been active members of the communities and towns in which they live and work. They strive to secure for all, continuous benefits from the Country's forest resources.

For more than 60 years, the Forest Service has been serving the Nation as a leading natural resource conservation agency.

☆ U.S. Government Printing Office: 1973-754-324/4