United States
Department of
Agriculture

Forest Service

Forest
Products
Laboratory

Research
Note
FPL-0251

May 1985

Performance of a Press-Lam Bridge

A 5-Year Load-Testing and Monitoring Program

David S. Gromala, Research Engineer[1]
Russell C. Moody, Research Engineer
Forest Products Laboratory, Madison, WI

Michael M. Sprinkel, Research Scientist
Virginia Highway and Transportation Research Council, Charlottesville, VA

Abstract

This paper summarizes the results of load tests on an experimental highway bridge erected and put into service on the George Washington National Forest in Virginia in 1977. The bridge, made entirely of Press-Lam, a laminated veneer lumber (LVL) product, was load tested 1 month, 1 year, and 5 years after erection.

The bridge continues to perform quite well and, although a slight increase in bridge flexibility was noted during this time period, the deflections were well below those calculated in the original design. Thus, laminated veneer structural members can be successfully used in exterior structures.

Keywords: Press-Lam, laminated veneer, bridge, load testing.

Gromala, David S.; Moody, Russell C.; Sprinkel, Michael M. Performance of a Press-Lam bridge: A 5-year load-testing and monitoring program. Res. Note FPL-0251. Madison, WI: U.S. Department of Agriculture, Forest Service, Forest Products Laboratory; 1985. 7 p.

A limited number of free copies of this publication are available to the public from the Forest Products Laboratory, P.O. Box 5130, Madison, WI 53705. Laboratory publications are sent to over 1,000 libraries in the United States and elsewhere.

The construction technique and materials used in the bridge tested in this study are discussed fully in the following publication: Youngquist, J. A.; Gromala, D. S.; Jokerst, R. W.; Moody, R. C.; Tschernitz, J. L. Design, fabrication, testing, and installation of a Press-Lam bridge. Res. Pap. FPL 332. Madison, WI: U.S. Department of Agriculture, Forest Service, Forest Products Laboratory; 1979.

The Laboratory is maintained in cooperation with the University of Wisconsin.

[1]David S. Gromala is now senior engineer with the Trus Joist Corporation, Richardson, TX.

Introduction

In this study, a small (20-ft span) highway bridge made of Press-Lam (a laminated veneer lumber (LVL) product developed at the Forest Products Laboratory) was proof loaded to full design load three times-after 1 month, 1 year, and 5 years of use. The bridge had been put into service on the George Washington National Forest in Virginia in 1977. Testing was conducted by the Virginia Highway and Transportation Research Council. The bridge (figs. 1 and 2) was designed for a standard American Association of State Highway and Transportation Officials (AASHTO) HS20-44 (AASHTO 1973) design load. An allowable bending stress of 2,000 pounds per square inch (lb/in.^{2}) was determined in the laboratory-on the basis of testing 18 stringers to failure.

Overall, the physical condition of the bridge is very good. The deck system, protected by an asphalt-wearing surface on top, shows only slight evidence of weather-induced checking at the exposed end grain. The stringers are in excellent condition. Only the bridge guardrail system, also made of Press-Lam, has significantly delaminated at several locations since 1977. However, a discussion of the guardrail system is beyond the scope of this paper. The reader is directed to Sprinkel (1982) for further information on this topic.

Background

During the early 1970's, a major research program at the U.S. Forest Products Laboratory was organized to develop an LVL product that could be used as a structural lumber substitute. The product, called Press-Lam, was produced by press drying and then laminating the still hot veneers. Press-Lam was conceived as a means to manufacture large structural timbers from small trees. Although much of the research was process oriented, the program was designed to culminate in the manufacture of sufficient quantities of Press-Lam for both laboratory testing and installation into demonstration structures, the largest of which is the bridge discussed in this paper.

LVL differs in significant ways from other commercially available products such as glued-laminated timbers and plywood. LVL is manufactured from peeled veneers, whereas glued-laminated timbers are manufactured from solid lumber laminations. This provides the potential for increased yield because peeling produces no sawdust. LVL is produced with all plies oriented in the same direction, rather than alternating directions as in plywood. Use of parallel plies produces a product that behaves much like lumber.

There are several LVL products currently in commercial production. Press-Lam, not currently being manufactured, differs from these LVL products in commercial use primarily in its use of a press dryer and in the use of the residual heat of drying to cure the adhesive.

Figure 1.—Loaded rear-axle trailer used for load testing the Press-Lam bridge. (M85 0023- 17)

Research Methods

The bridge was loaded with the rear tandem axle of a truck 2 weeks after construction in the spring of 1977, again a year later in 1978, and once again 5 years later in 1982. The load of approximately 40,000 pounds was applied at stringer midspans at 13 locations across the bridge (fig. 1). Deflections were measured at the midspan of each stringer. Also, the moisture content on the stringers and the deck was measured after 3 months, 6 months, and then annually, using a resistance-type moisture meter.

The deflection results were analyzed by comparing the readings for the tests after 1, 2, and 5 years, and by comparing results with those predicted by the design. Moisture contents for similar locations were also compared over the 5-year period.

Results and Discussion

Results of the deflection readings are summarized in Table 1, and an example of the deflection profile under one loading is shown in figure 3. The bridge became slightly more flexible with age. Total deflection increased 9 percent after 1 year and 17 percent after 5 years. This might be expected, as moisture content of the bridge members has increased by up to 5 percent since 1977 (fig. 4).

Based on the deflection data, the load distribution factor for the interior stringers has remained nearly constant, decreasing less than 4 percent since installation. After 5 years, the load-distributing ability of the deck remains about 25 percent better than assumed in the initial design. Thus, deflections are all less than 75 percent of those predicted in the design.

Examination of deflection profiles for the 3 load tests for all 13 load positions confirmed the increase in flexibility. However, some of the increase in deflections appears to be a “smoothing” of the deflection profile (especially between the wheel loads) rather than an overall increase in deflections across the bridge.

If the deflections are plotted as influence lines for the stringers (fig. 5), other observations are apparent. The first is that the same smoothing effect that was indicated in the deflection profiles occurs in the influence lines. A second, more significant, observation is that the maximum deflection observed in the 1977 load test was not exceeded in the 1978 or 1982 load tests for 7 of the 11 stringers. For the other four stringers, the 1977 maximum was exceeded by 8 to 17 percent in subsequent tests.

Table 1.—Comparison of results of three series of load tests[1]

	Initial loading	1 -year loading	5-year loading
Test date	May 4, 1977	April 26, 1978	May 11, 1982
Loading			
Total test load (lb).	40,780	40,280	39,400
Theoretical maximum test moment as a percentage of moment produced by 32,000 lb AASHTO axle . .	97.6	96.4	93.6
Deflection			
Theoretical maximum midspan deflection (in.):			
Interior stringers	0.446	0.440	0.431
Exterior stringers	0.440	0.435	0.425
Measured maximum midspan deflection as a percentage of the theoretical:			
Interior stringers	62.5	63.6	74.1
Exterior stringers	70.8	71.4	73.4
Total deflection for 13 loading positions (in.)	13.21	14.27	14.88
Ratio of total deflection to that at initial loading[2]	1.00	1.09	1.17
Interior stringer load distribution factor based on deflection data	5.65	5.60	5.45

[1]Note: Adapted from Sprinkel (1982).

[2]Normalized to 40,780 lb loading.

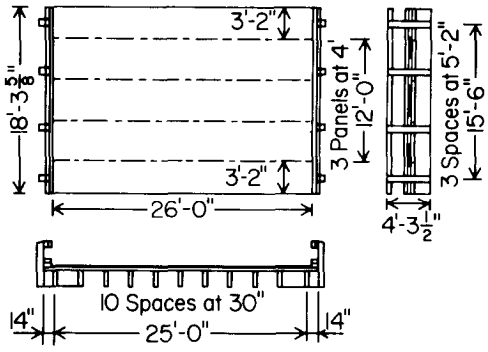

Figure 2.—Construction of Press-Lam bridge. (ML85 5007)

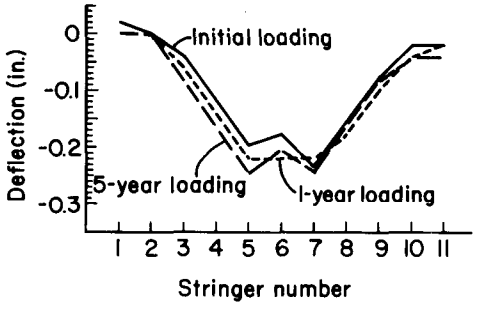

Figure 3.—Typical deflection profile for the truck positioned near the center of the bridge. (ML85 5006)

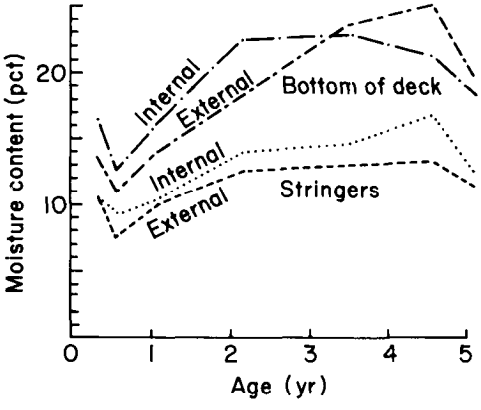

Figure 4.—Change in moisture content of various bridge components. (ML85 5004)

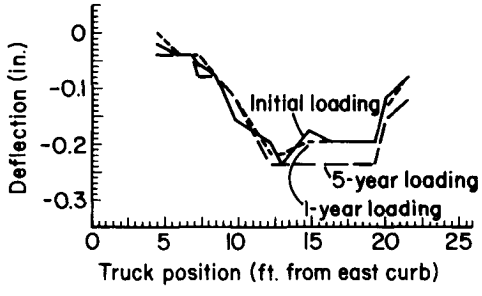

Figure 5.—Typical influence line for stringer deflection related to truck position. This shows the deflection of a stringer located at about 13 feet from the east curb when the load is located at different positions. (ML85 5005)

If one assumes that the stiffness of the structural elements remains reasonably constant over time while the composite action between the deck and stringers decreases, one might expect the type of behavior exhibited in the Press-Lam bridge. Under this assumption, the deck would retain its ability to distribute load laterally but would not effectively transmit loads longitudinally. In this way, if a given portion of the load was transmitted to the supports due to plate action in the 1977 test, a larger share of the loads would be transmitted laterally in the subsequent tests. This effect would produce smoother deflection profiles and higher deflections in those stringers not directly under a load.

Pault et al. (1977) showed that composite action in reduced-scale glulam timber bridge systems can stiffen a bridge by about 8 percent. Thus, to obtain larger increases in deflection one must assume that the stringer stiffnesses have also decreased somewhat. If one assumes that the increase in stringer deflections with age is due to a decrease in modulus of elasticity of the deck and the stringers (as a result of increased moisture content or some type of structural deterioration), both the deflection profiles and the influence lines should exhibit relatively uniform increases in deflection in the subsequent load tests. Such behavior was not observed. Thus, the most reasonable hypothesis that is consistent with the test data is that either the stiffness of the stringers has decreased relative to the deck stiffness or the composite action between them has decreased substantially.

Summary

A prototype bridge constructed entirely of Press-Lam, an LVL product, was erected in 1977 and field tested to its design load three times over a 5-year period. The bridge continues to perform satisfactorily, in fact better than predicted by the original design calculations.

The bridge has become more flexible with age; however, maximum stringer deflections have not significantly increased. The load test data indicate that at least part of the loss in stiffness may be caused by a decrease in deck-stringer composite action. Some additional loss in stiffness may be caused by a decrease in stringer stiffness.

Literature Cited

American Association of State Highway and Transportation Officials. Standard specifications for highway bridges. Washington, DC: AASHTO; 1973.

Pault, J. D.; Gutkowski, R. M.; Goodman, J. R.; Bodig, J. Composite action in glulam timber bridge systems. Structural Res. Rep. 17. Fort Collins, CO: Colorado State University; 1977.

Sprinkel, M. M. Evaluation of the performance of a Press-Lam timber bridge: bridge installation and load test. Interim Rep. No. 1. VHTRC 78-R2. Virginia Highway and Transportation Research Council; 1977.

Sprinkel, M. M. Evaluation of the performance of a Press-Lam timber bridge: bridge performance and load test after 1 year. Interim Rep. No. 2. VHTRC 78-R57. Virginia Highway and Transportation Research Council; 1978.

Sprinkel, M. M. Final report: evaluation of the performance of a Press-Lam timber bridge. VHTRC 82-R56. Virginia Highway and Transportation Research Council; 1982.

Youngquist, J. A.; Gromala, D. S.; Jokerst, R. W.; Moody, R. C.; Tschernitz, J. L. Design, fabrication, testing, and installation of a Press-Lam bridge. Res. Pap. FPL 332. Madison, WI: U.S. Department of Agriculture, Forest Service, Forest Products Laboratory; 1979.

Acknowledgments

The Press-Lam bridge project was made possible by the cooperation of many people in both State and Federal agencies (Youngquist et al. 1979).

This paper is based on data collected by the Virginia Highway and Transportation Research Council.

2.4-5/85

☆ U.S. GOVERNMENT PRINTING OFFICE: 1985-554 045-10035

The Forest Products Laboratory (USDA Forest Service) has served as the national center for wood utilization research since 1910. The Laboratory, on the University of Wisconsin-Madison campus, has achieved worldwide recognition for its contribution to the knowledge and better use of wood.

Early research at the Laboratory helped establish U.S. industries that produce pulp and paper, lumber, structural beams, plywood, particleboard and wood furniture, and other wood products. Studies now in progress provide a basis for more effective management and use of our timber resource by answering critical questions on its basic characteristics and on its conversion for use in a variety of consumer applications.

Unanswered questions remain and new ones will arise because of changes in the timber resource and increased use of wood products. As we approach the 21st Century, scientists at the Forest Products Laboratory will continue to meet the challenge posed by these questions.

Forest Products Laboratory
1910 75th 1985
ANNIVERSARY