United States
Department of
Agriculture

Forest Service

Forest
Products
Laboratory

Research
Note
FPL-0247

July 1984

The Role of Water Repellents and Chemicals in Controlling Mildew on Wood Exposed Outdoors

William C. Feist, Supervisory Research Chemist
Forest Products Laboratory, Madison, Wis.

Abstract

The natural look of wood siding, and the retention of that look, has become increasingly popular over the past several years. Many new commercial formulations are being offered for use as clear natural wood finishes. A successful finish will retain color, control mold and mildew, and minimize weathering. Some of these formulations contain a chemical as a mildewcide (fungicide, preservative) and/or a water repellent, and some do not. To evaluate several chemicals (alone or in combination with water repellents) as components of natural finish formulations, we dip-treated ponderosa pine sapwood specimens in various formulations and exposed them on test fences in Mississippi, Wisconsin and Washington.

Several chemicals were very effective at controlling mildew and maintaining the natural appearance of the exposed wood. Aqueous formulations of chromium salts were the most effective for up to 22 months exposure outdoors. Many chemical formulations in mineral spirits (including water repellents and wood sealers) were effective for 5 to 9 months of exposure, but

Feist, William C.; The role of water repellents and chemicals in controlling mildew on wood exposed outdoors. Res. Note FPL-0247. Madison, WI: U.S. Department of Agriculture, Forest Service, Forest Products Laboratory; 1984. p. 15.

A limited number of free copies of this publication are available to the public from the Forest Products Laboratory, P.O. Box 5130, Madison, WI 53705. Laboratory publications are sent to over 1,000 libraries in the United States and elsewhere.

The Laboratory is maintained in cooperation with the University of Wisconsin.

Note: Abbreviations used in this publication are summarized in Appendix I, and italicized numbers in parentheses refer to literature cited at end of report.

Keywords: Natural finishes, moisture control, mildewcides, siding, outdoor exposure, weathering, water repellent, water-repellent preservative, fungicides, preservatives.

their effectiveness was reduced with longer exposure. Of all the chemicals evaluated in mineral spirits formulations, only pentachlorophenol and copper naphthenate were found to be effective mildewcides after exposures of greater than 9 months. Their mildewcidal effectiveness was improved with the addition of a simple water repellent (paraffin wax), especially with exposures greater than 9 months.

Mildew growth was markedly worse in the warm, humid climate of Mississippi than in Washington or Wisconsin. This means that natural wood finishes for climates similar to Mississippi must contain high concentrations of effective mildewcides for good performance.

This paper should be useful to homeowners, architects, builders, and wood finish formulators.

Introduction

The fresh, new, natural look for wood exposed outdoors as siding, decking, fencing and furniture, has been popular for a long time. Unfortunately, unprotected wood exposed outdoors usually changes color very quickly and ultimately becomes gray. In this weathering process (*11,19*) fungal stain is the primary cause of graying (*4,8,14-16*). This fungal stain is commonly called mildew or mildew growth. The most common stain fungus found on exposed wood surfaces is *Aureobasidium pullulans* (de Bary) Arnaud (*11,16*). This fungus is also commonly found on paint and other surfaces (*3,16*).

Many natural finish formulations incorporate a chemical as a mildewcide, fungicide, or preservative to control stain organisms such as mildew (*12,14,15*). Chemicals are used to control sapstain and mold on freshly cut wood (*4,5,6,9,17,18,20*). Water repellents usually combined with chemicals are used to help control fungal stains and decay on painted wood (*11-14*). Despite the large number of studies on the control of fungal stains in wood and the control of weathering, little effort has been directed toward developing natural finishes by judicious combinations of chemicals (as mildewcides) and water repellents. Indeed, the role of water repellents in finish formulations is poorly understood even though such formulations have existed for many years (*11,12,14*).

The objectives of the work reported here were to: 1) investigate different chemicals for use as mildewcides in a clear natural wood finish, and 2) determine the effectiveness and/or synergistic effect of water repellents used in combination with chemicals in a natural wood finish. The formulations studied were applied to wood by dipping, and the treated specimens exposed outdoors above ground at three exposure sites with greatly varying climates.

Test Procedures, Materials, Methods

Exposure Specimens

This study was originally designed to determine the effectiveness of chemicals and water repellents in protecting wood exposed above ground. The specimen design is that reported earlier as a post and rail test unit (*7*), or a step-rail joint (9). This specimen design was chosen because the prime concern was to study the effects of chemical treatments in controlling decay organisms. However, initial observations indicated that mildew growth and its control could also be evaluated from the exposure of these test specimens. The specimens were all made from planed, clear sapwood of Ponderosa pine (*Pinus ponderosa*) and assembled as described by Clark and Scheffer (*7*) (Fig. 1). They were mounted approximately 4 feet above the ground on vertical exposure fences facing to the south. The two sections of each specimen were always end-matched from one board and the replicate specimens for three exposure sites were cut from one board. Holes for nails and screws were drilled before dip treatment.

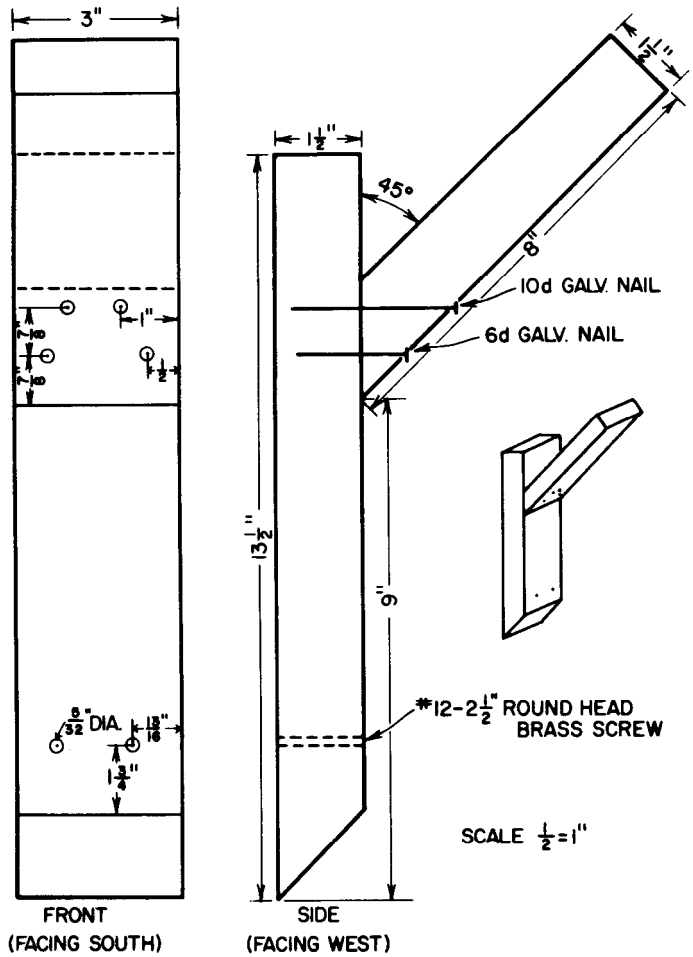

Figure 1.--Diagram post and rail specimen.

Exposure Sites

Three replicate test specimens for each treatment were installed on each of the vertical fences at Saucier, Miss., Madison, Wis., and Olympia, Wash. These exposures represent the extremes of a warm, moist climate in the South; a wide range of cold and heat in the upper Midwest; and a cool, moist climate in the Pacific Northwest.

Wood Treatments

The dip treatments used for this study are described as water repellents (WR), water-repellent preservatives (WRP) and wood preservatives (WP). (The words wood preservatives include all chemicals used in the study including mildewcides.) A representative composition range is shown in Appendix II. The largest number of treatments used mineral spirits as a solvent (treatments 1-46, Appendix Ill). Most WRP's were made with one percent paraffin wax in a wood sealer as the WR. The 52 formulations used are summarized in Appendix Ill.

Each set of three specimens for each of the three exposure sites was weighed and treated by immersion for 3 minutes in the formulations shown in Appendix Ill. The specimens were drained for 3 minutes and weighed. Treating solution retentions are shown in Appendix IV. Retentions ranged from 1.6 to 5.3 wet weight percent for the mineral spirit formulations and 3.6 to 8.8 for the aqueous ones. All specimens were air-dried for at least 2 weeks before installation on the exposure fences.

The mildewcidal effectiveness of chemicals with known preservative or mildewcide properties was evaluated at different concentrations in the dip-treated specimens. Some chemical combinations were included in the study and some commercially available WRP's were included for comparative purposes. Three concentrations of each chemical were evaluated (Appendix Ill). Chemical concentration ranges were chosen based on the results of earlier studies (*5,6,9,12,14,15*).

Treatments 10 to 44 were chosen to study the contribution of a WR to control of mildew growth by WRP formulations (Appendix Ill). Each even-numbered treatment contained one percent paraffin wax as the WR plus a chemical (preservative) for mildew control. In the odd-numbered treatments, the formulation was WP in a wood sealer without WR.

Mildew Evaluations

Test specimens were installed between December 23, 1977, and April 15, 1978, at the three sites. The effectiveness of the test formulations in controlling mildew growth was evaluated visually. All portions of the test specimens were examined and rated. Evaluations were performed as regularly as possible for comparative purposes. Budgetary travel restrictions did not permit evaluations at equivalent exposure times at each site. Colored photographic (35 mm) transparencies were used for evaluation and direct comparison along with onsite inspection. Each specimen was assigned a mildew rating value on a descending scale of 10 to zero in accordance with the usual American Society for Testing and Materials (ASTM) practices for

finish evaluation (*1*). A value of 10 represents no mildew growth while a value of 0 represents 100 percent mildew growth on the entire specimen surface (74). A photographic representation of each of the values from 10 to 0 was used as a reference similar to those used by ASTM (*1*).

From a practical standpoint, a value of 10 indicates no change from the original unweathered condition, total failure is represented by a 0, and 5 represents a condition at which a homeowner, for example, would need to refinish wood siding to retain a natural look. Thus, 5 can be considered the point of pass/fail in evaluating any system for mildew protection in a natural wood finish. This will be discussed later in describing the results.

Results and Discussion

Mildew Ratings for Water Repellents

Water repellents used alone, whether laboratory or commercially prepared, were moderately effective in controlling mildew growth during the first 5 to 9 months of exposure (table 1). After 15 to 20 months of exposure, mildew growth on the wood surfaces was not greatly retarded by pretreatment with a WR. This shows that denying fungal stain organisms the moisture they need for growth by using a simple WR treatment can give short term protection to wood surfaces.

Water repellent concentration in a 10 percent resin content sealer was varied between 0.25 and 2.0 weight percent, (table 1). The low level of WR (paraffin wax) was nearly as effective as the high. A simple wood sealer (Treatment No. 3, 20 pct exterior varnish in mineral spirits), which is the WR formulation without any paraffin wax, was also effective in controlling mildew growth in the early exposure time. Effectiveness was markedly reduced after outdoor exposures greater than 9 months. This shows that a wood sealer is capable of acting as a WR even without added paraffin wax, but will not be effective for more than 5 to 9 months.

Mildew Ratings for Water-Repellent Preservatives and Wood Preservatives

Mildew rating values for all chemicals used in WRP or WP formulations are shown in table 2. The extent of mildew growth on the surface of the test specimens is seen in the mildew rating value at each of the exposure sites for the exposure time shown.

All of the WRP and WP formulations controlled mildew growth well during the first exposure period of 5 to 9 months at each exposure site. The effectiveness of the WRP and WP formulations was greatly reduced after exposure outdoors for 15 to 20 months (table 2). The greatest loss of effectiveness was found at the warm, humid Mississippi site. Further exposure of 27 to 33 months resulted in essentially total failure of all formulations in controlling mildew growth and the graying of wood (mildew rating value below 5).

Table 1.--Mildew rating values for wood treatments without chemicals

Treatment type[1]	Treatment formulation No.[3]	Water-repellent concentration	Mildew rating at each exposure site[2]								
			Mississippi after (mo)			Wisconsin after (mo)			Washington after (mo)		
			8	17	22	9	20	33	5	15	29
		Pct									
Control	1	0	3.0	0.7	0.0	6.3	2.3	0.7	3.7	2.7	0.7
Mineral spirits	2	0	3.3	1.3	0.0	6.3	2.3	1.0	3.7	2.0	0.3
Wood sealer	3	0	6.0	0.7	0.0	6.7	2.7	1.0	7.0	3.3	1.0
Water repellent	4	0.25	6.0	2.0	0.0	8.0	3.0	2.0	7.7	2.7	0.3
Water repellent	5	0.5	6.7	1.0	0.3	7.7	3.7	1.0	6.3	2.7	0.3
Water repellent	6	1.0	7.7	1.7	0.0	8.0	3.0	1.7	8.0	3.7	1.0
Water repellent	7	2.0	7.0	1.3	0.3	8.0	4.0	3.0	8.0	3.0	1.0
Commercial water repellent-l	8	—	5.7	1.0	0.0	7.0	3.0	1.7	7.0	2.0	1.0
Commercial water repellent-2	9	—	6.0	1.0	0.3	8.7	4.0	1.7	7.0	4.0	2.0

[1]See appendixes I, II, and III.

[2]Average of 3 specimens.

[3]Formulations 4-7 contained 10 percent resin. Commercial water repellents (8,9) also contain some resin.

The 16 most effective treating formulations were ranked (table 3). Ranking changed somvwhat between 5 to 9 months and 15 to 20 months of exposure. Of the 16 formulations in the first exposure period, 11 remained in the ranking after the second period. The aqueous chromium-containing formulations were the most effective after either exposure time. Mineral spirits formulations containing CONAP or Penta, alone or in combination, were the next most effective after 15 to 20 months of exposure. There were 4 chromium-containing, 5 CONAP-containing, 3 Penta-containing, and 3 containing Penta plus CONAP formulations and 1 containing Penta plus CO-8-Q in the first 16 most effective formulations after 15 to 20 months of exposure.

A major goal of this study was to determine if water repellents added to mineral spirits formulations of wood preservatives would help improve the mildewcidal characteristics of the formulation. For ease of comparison, the mildew ratings of all WRP's were combined at each site for each exposure time and the values averaged (table 4). The same was done for each corresponding WP.

Generally, WRP's performed better than WP's in controlling mildew growth. The improvement was greatest at the Mississippi site and least at the Washington site after the first exposure of 5 to 9 months. The WP's were more effective at the Wisconsin and Washington sites after 15 to 20 months of exposure and the WRP's were consistently better than the corresponding WP's. Average mildew ratings at these two sites were 0.9 to 1.3 units better for the WRP than the WP, equivalent to 20 to 31 percent improvement. Thus, water repellents added to wood preservatives (i.e. chemicals as mildewcides in a treatment formulation) will help to increase resistance to mildew growth for the formulation. This means that natural wood finishes would benefit in having both mildewcides (and/or mildewstats) and water repellents in their formulation.

Table 2.--Mildew rating values for wood treatments with chemicals as mildewcides--con.

Treatment type[1]	Treatment formulation No.	Chemical[1]	Concentration	Mildew rating at each exposure site[2]								
				Mississippi after (mo)			Wisconsin after (mo)			Washington after (mo)		
				8	17	22	9	20	33	5	15	28
			Pct									
			MINERAL SPIRITS FORMULATIONS									
Control	1			3.0	0.7	0.0	6.3	2.3	0.7	3.7	2.7	0.7
WRP	10	Penta	2.5	7.7	1.3	0.0	8.0	5.0	1.7	9.0	4.0	3.0
WP	11	Penta	2.5	7.0	0.7	0.0	7.7	4.0	1.7	8.7	2.0	1.0
WRP	12	Penta	5.0	8.0	4.0	2.7	8.0	7.0	2.0	9.0	7.0	3.0
WP	13	Penta	5.0	8.0	4.3	1.0	8.7	7.3	3.0	9.7	6.3	2.0
Commercial WRP	14	Penta	5.0	7.0	3.3	0.0	7.7	4.0	2.0	8.0	6.7	2.0
WRP	15	Penta ZINAP	2.5 1.0	7.7	0.3	0.0	8.0	5.0	1.3	9.0	3.0	2.0
WP	16	Penta ZINAP	2.5 1.0	7.0	2.0	0.0	7.7	4.3	1.0	9.0	3.0	0.7
WRP	17	Penta CONAP	2.5 1.0	8.7	4.3	3.7	8.7	6.7	1.3	9.0	5.3	2.7
WP	18	Penta CONAP	2.5 1.0	8.3	4.0	3.3	8.0	6.0	1.0	9.0	5.0	2.0
WRP	19	Penta CO-8-Q	2.5 0.6	8.7	3.0	0.0	8.0	4.0	1.7	9.0	8.0	3.0
WP	20	Penta CO-8-Q	2.5 0.6	7.7	2.3	0.0	7.7	3.7	1.3	7.7	5.3	1.3
WRP	21	CONAP	0.5	8.0	2.0	0.7	8.3	4.3	2.0	9.0	5.3	1.0
WP	22	CONAP	0.5	7.3	1.3	0.0	8.0	3.0	1.3	7.7	5.3	1.0
WRP	23	CONAP	1.0	8.7	2.7	3.3	9.0	6.0	1.0	8.7	6.3	2.7
WP	24	CONAP	1.0	7.7	2.3	1.7	7.7	5.7	1.3	9.0	5.7	2.3
WRP	25	CONAP	2.0	9.0	2.7	3.3	9.3	6.3	1.3	9.0	7.3	3.3
WP	26	CONAP	2.0	8.7	2.3	2.0	8.3	6.3	1.0	9.0	7.0	2.3
WRP	27	ZINAP	0.5	7.7	1.3	0.0	7.7	4.7	2.0	8.3	5.0	1.0
WP	28	ZINAP	0.5	6.3	0.7	0.0	7.3	2.3	1.7	8.0	3.3	0.0
WRP	29	ZINAP	1.0	8.0	0.7	0.0	7.7	4.7	1.0	7.7	5.0	2.0
WP	30	ZINAP	1.0	6.7	0.3	0.0	7.0	3.0	1.0	7.7	2.7	0.7
WRP	31	ZINAP	2.0	8.0	0.0	0.0	8.0	5.0	1.7	8.0	3.3	0.7
WP	32	ZINAP	2.0	7.0	0.0	0.0	6.7	3.7	0.7	8.0	3.0	0.0
WRP	33	CO-8-Q	0.3	8.0	0.7	0.0	7.7	4.7	1.0	9.0	6.0	1.0
WP	34	CO-8-Q	0.3	7.0	0.7	0.0	9.0	4.0	1.3	9.0	4.0	0.0
WRP	35	CO-8-Q	0.6	9.0	1.7	0.0	9.3	5.3	2.0	9.0	5.7	1.0
WP	36	CO-8-Q	0.6	7.7	1.7	0.0	8.7	5.3	1.7	9.0	3.7	0.0
WRP	37	CO-8-Q	1.2	9.0	2.0	0.0	9.3	5.3	1.3	9.0	6.0	1.0
WP	38	CO-8-Q	1.2	8.0	2.0	0.0	9.0	5.0	1.3	8.7	4.3	0.0
WRP	39	TBTO	0.5	9.0	3.0	1.0	9.0	6.0	1.7	8.3	5.0	1.0
WP	40	TBTO	0.5	7.0	1.0	0.0	7.7	3.7	0.7	8.0	3.7	0.0
WRP	41	TBTO	1.0	8.7	1.3	0.0	8.7	5.7	1.3	9.0	5.7	1.0
WP	42	TBTO	1.0	6.7	0.7	0.0	8.3	4.3	1.3	9.0	3.7	0.0
WRP	43	TBTO	2.0	8.7	2.0	0.3	9.0	5.0	1.3	9.0	5.7	0.7
WP	44	TBTO	2.0	6.3	0.7	0.0	8.0	5.0	1.3	9.0	3.3	0.3
Commercial WRP	45	CONAP	2.0	7.7	5.7	4.0	8.0	7.0	2.0	8.0	7.0	2.0
Commercial WRP	46	ZINAP	2.0	6.3	2.7	0.0	7.0	3.0	1.7	6.7	2.3	0.7
			WATERBORNE FORMULATIONS									
WP	47	CrO_3	1.25	9.0	4.7	4.3	10.0	7.0	4.3	9.0	6.3	3.0
WP	48	CrO_3	2.5	10.0	8.0	7.0	10.0	9.0	5.0	10.0	8.0	4.0
WP	49	$CuCrO_4$-Acid	2.5	8.0	6.7	4.7	10.0	10.0	4.7	9.0	7.0	2.0
WP	50	$CuCrO_4$-Amm.	2.5	9.0	5.3	5.0	10.0	8.3	4.0	10.0	8.7	3.0
WP	51	Na_2MoO_4	2.5	4.7	0.0	0.0	6.7	2.7	1.3	6.3	1.7	0.0
WP	52	$CuMoO_4$	2.5	6.7	0.7	0.0	9.3	6.3	2.0	7.7	3.0	0.3

'See appendixes I and II.

*Average of 3 specimens.

Table 3.--Ranking of 16 most effective treating formulations after exposure at 3 sites[1]

Ranking	Treatment formulation No.	
	After 5-9 months	After 15-20 months
1	48 (CrO_3)	48 (CrO_3)
2	50(CrO_3 + $Cu(NO_3)_2$)	49 (CrO_3 + $Cu(NO_3)_2$)
3	47 (CrO_3)	50 (CrO_3 + $Cu(NO_3)_2$)
4	25 (CONAP)	45 (CONAP)
5	35 (CO-8-Q)	12 (Penta)
6	37 (CO-8-Q)	47 (CrO_3)
7	49 (CrO_3 + $Cu(NO_3)_2$)	13 (Penta)
8	43 (TBTO)	17 (Penta + CONAP)
9	13 (Penta)	25 (CONAP)
10	17 (Penta + CONAP)	26 (CONAP)
11	23 (CONAP)	18 (Penta + CONAP)
12	41 (TBTO)	19 (Penta + CO-8-Q)
13	39 (TBTO)	23 (CONAP)
14	26 (CONAP)	14 (Penta)
15	19 (Penta + CO-8-Q)	39 (TBTO)
16	38 (CO-8-Q)	24 (CONAP)

[1]Mildew rating values combined from specimens at 3 exposure sites (See table 2).

Table 4.--Comparison of mildew rating values for WP and WRP formulations at three exposure sites

Exposure site	Exposure	Mildew ratings[1]			
		WRP		WP	
		Total	Average	Total	Average
	Mo				
Mississippi	8	143	8.4	124	7.3
Mississippi	17	33	1.9	27	1.6
Wisconsin	9	144	8.5	136	8.0
Wisconsin	20	91	5.4	77	4.5
Washington	5	149	8.8	146	8.6
Washington	15	94	5.5	71	4.2

[1]Highest possible total rating representing no mildew growth would be 170. A single specimen with no mildew growth would have a 10 rating.

Waterborne Chromium Salts as Mildewcides

Earlier studies (*2,10,14*) had shown that various chromium-containing chemical solutions could be used as natural finishes for wood. The hexavalent chromium compounds were shown to help control mildew growth and also provided water repellency. Of all the chemical formulations investigated in this study, the aqueous solutions of hexavalent chromium were the most effective at controlling mildew growth (formulations 47 to 50). They also provided the best performance after longer exposures of 17 to 33 months (table 2). The single best formulation in this study was an aqueous solution of 4.8 percent CrO_3. (This solution contains the equivalent of 2.5 percent chromium). This single chemical solution was also shown to be highly effective in protecting exposed wood surfaces from ultraviolet light degradation and from liquid water (*10*).

Effect of Climate on Mildew Growth and Mildewcide Effectiveness

An earlier related study (*15*) on the performance of chemicals as mildewcides in a semi-transparent stain wood finish showed that the Upper Midwest climate in Madison, Wis., had less mildew growth on treated test specimens than the Washington or Mississippi test sites. In that study, mildew growth on all test specimens in the cool, moist climate of Olympia, Wash., and in the warm, moist climate near the Gulf Coast in Saucier, Miss., was 1.5 times as severe as that in Wisconsin after 30 months of exposure. The study reported here showed that mildew growth was almost three times greater in Mississippi than in Wisconsin or Washington after 15 to 20 months of exposure (table 4). This conclusion was based on a comparison of the average mildew rating for all specimens at each site, at each exposure time. There was only a small difference in the mildew values at the three sites for the 5- to 9-month exposure time. This observation shows the effectiveness of the various WRP and WP formulations in controlling mildew growth at the shorter exposure time even in areas with a high tendency for mildew growth. The effectiveness is reduced with longer exposure times.

The differences in mildew growth at the three exposure sites can also be assessed by comparing the number of treatments that result in a mildew rating of 5 or above (assuming that a rating of 5 would require a homeowner to refinish a natural wood finish). In the 5- to 9-month exposure period, there was little difference in the number of treatments that were rated 5 or above at all 3 sites (table 5). After 15 to 20 months, however, the Wisconsin and Washington exposure sites had 25 and 26 treatments respectively, with a rating above 5 while the Mississippi site had only 4 treatment formulations above 5. When the number of treatments with a rating above 8 are compared (table 5), the greater mildew growth on test specimens at the Mississippi site is readily apparent. After longer exposures, there is little difference between the number of treatment formulations with a rating of 8 or above.

Table 5.--Number of treatments with a passing mildew rating, and average mildew ratings for all specimens at each exposure site and time

Location	Exposure time	Number of treatments with a mildew rating of 5 or above	Number of treatments with a mildew rating of 8 or above	Average mildew rating[1]
	MO			
Mississippi	8	49	22	7.5
	17	4	1	2.1
	22	2	0	0.9
Wisconsin	9	52	33	8.2
	20	25	3	4.9
	33	1	0	1.7
Washington	5	50	41	8.3
	15	26	1	4.7
	28	0	0	1.3

[1]Average mildew rating of all specimens exposed at each site for time shown.

Summary and Conclusions

This outdoor exposure study of the performance of chemicals alone or in combination with water repellents shows the value of several treatment formulations in controlling mildew growth on exposed wood surfaces. Aqueous formulations containing chromium salts, and mineral spirits based formulations containing pentachlorophenol, copper naphthenate or combinations of the two, were quite effective when treated wood specimens were exposed for 5 to 9 months. The effectiveness fell fairly rapidly in the longer exposure times of 15 to 20 months. Only half the formulations evaluated were effective after 15 to 20 months exposure in Wisconsin or Washington and only 4 of the 52 formulations were of any value in Mississippi (formulations 45, 48, 49, 50).

This study showed that adding a simple water repellent (paraffin wax) to a wood preservative formulation in mineral spirits would help control mildew growth to a greater extent than the wood preservative alone. However, water repellents alone are not very effective in controlling mildew growth except for short exposure times of 5 to 9 months. The water repellent concentration used for most of this study was that normally used for a paintable pretreatment system. It may well be that larger amounts of a water repellent, or perhaps different water repellents, might be more effective. This study showed, however, that raising the concentration of paraffin wax from 0.5 to 2.0 percent did not greatly reduce mildew growth on the wood surface more than that found for 0.5 percent. Wood sealers (10 pct resin content in mineral spirits) were also effective as mildew control agents for short exposures of 5 to 9 months.

As we and others have found, mildew growth was greater in warm, humid climates. This means higher concentrations of effective mildewcides or more stable compounds will be needed in natural finish formulations for these climates to help control mildew growth as compared to cooler, less humid climates.

This study did not contain a wide range of chemicals that may be suitable as mildewcides in natural finish formulations. A number of additional exposure studies prompted by this study are underway, and newer chemicals were included. In addition, typical siding materials (wood, plywood, waferboard) are being used to evaluate the mildewcidal effectiveness of the chemicals.

The specimens used in this study will be left exposed outdoors with the hope that future evaluations will help to determine the combined role of wood preservatives and water repellents in protecting unfinished millwork from weathering and decay.

Acknowledgement

Edward A. Mraz and Peter G. Sotos gave helpful suggestions and technical assistance in this study.

Literature Cited

1. American Society for Testing and Materials. Annual Book of ASTM Standards, Part 27. Paint-tests for formulated products and applied coatings. ASTM D 659-74, D 660-44, D 661-44, D662-44, D 714-56, D 772-47. Philadelphia, PA; 1978.

2. Black, J. M.; Mraz, E. A. Inorganic surface treatments for weather-resistant natural finishes. Res. Pap. FPL 232. Madison, WI: U.S. Department of Agriculture, Forest Service, Forest Products Laboratory; 1974.

3. Brand, B. G.; Kemp, H. T. Mildew defacement of organic coatings. The Paint Res. Inst., Fed. of Soc. for Paint Techn. Philadelphia, PA; 1973.

4. Butcher, J. A.; Drysdale, J. Laboratory screening trials with chemicals for protection of sawn timber against mold, sapstain and decay. International Biodeterioration Bulletin. 14(1): 11-19; 1978.

5. Cassens, D. L.; Eslyn, W. E. Fungicides to prevent sapstain and mold on hardwood lumber. Forest Products Journal. 31(9): 39-42; 1981.

6. Cassens, D. L.; Eslyn, W. E. Field trials of chemicals to control sapstain and mold on yellow-poplar and southern yellow pine lumber. Forest Products Journal. 33(10): 52-56; 1983.

7. Clark, J. W.; Scheffer, T. C. A test of various preservatives and treating methods for new lumber going into exterior structures of Navy frame buildings. Office Report. Madison, WI: U.S. Department of Agriculture, Forest Service, Forest Products Laboratory; 1958.

8. Duncan, C. G. Role of microorganisms in weathering of wood. Official Digest. Federation of Paint and Varnish Production Clubs. 35(465): 1003-1012; 1963.

9. Eslyn, W. E.; Cassens, D. L. Laboratory evaluation of selected fungicides for control of sapstain and mold on southern pine lumber. Forest Products Journal. 33(4): 65-68; 1983.

10. Feist, W. C. Protection of wood surfaces with chromium trioxide. Res. Pap. FPL-339. Madison, WI: U.S. Department of Agriculture, Forest Service, Forest Products Laboratory; 1979.

11. Feist, W. C. Weathering of wood in structural use. In: Structural uses of wood in adverse environments. Meyer, R. W.; Kellogg, R. M., eds. New York: Van Nostrand Reinhold; 1982.

12. Feist, W. C.; Mraz, E. A. Wood finishing: Water repellents and water repellent preservatives. Res. Note FPL-0124. Madison, WI: U.S. Department of Agriculture, Forest Service, Forest Products Laboratory; 1978.

13. Feist, W. C.; Mraz, E. A. Protecting millwork with water repellents. Forest Products Journal. 28(5): 31-35; 1978.

14. Feist, W. C.; Mraz, E. A. Durability of exterior natural finishes in the Pacific Northwest. Res. Pap. FPL 366. Madison, WI: U.S. Department of Agriculture, Forest Service, Forest Products Laboratory; 1980.

15. Feist, W. C.; Mraz, E. A. Performance of mildewcides in a semitransparent stain wood finish. Forest Products Journal. 30(5): 43-46;1980

16. Schmidt, E. L.; French, D. W. *Aureobasidium pullulans* on wood shingles. Forest Products Journal. 26(7): 34-37; 1976.

17. Unligil, H. H. Prevention of fungal stains on pine lumber--Laboratory screening tests with fungicides. Forest Products Journal. 26(1): 32-33; 1976.

18. Unligil, H. H. Laboratory screening tests of fungicides of low toxic hazard for preventing fungal stain of lumber. Forest Products Journal. 29(4): 55-56; 1979.

19. U.S. Department of Agriculture. Wood finishing: Weathering of wood. Res. Note FPL-0135. Madison, WI: U.S. Department of Agriculture, Forest Service, Forest Products Laboratory; 1975.

20. Verrall, A. F. Preserving wood by brush dip and short-soak methods. Tech. Bull. 334. U.S. Department of Agriculture, Forest Service, Washington, D.C.; 1965.

Appendix I

Abbreviations Used in this Publication

Name	*Abbreviation*
Bis - (tri-n-butyltin) oxide	TBTO
Chromium trioxide	CrO_3
Copper nitrate	$Cu(NO_3)_2$
Copper molybdate	$CuMoO_4$
Copper naphthenate	CONAP
Copper-8-quinolinolate	CO-8-Q
Pentachlorophenol	Penta
Sodium molybdate	Na_2MoO_4
Water repellent	WR
Water-repellent preservative	WRP
Wood preservative	WP
Zinc naphthenate	ZINAP

Appendix II

Water repellent and water-repellent preservative composition[1]

Component	Composition range[2]
	Weight pct
Exterior grade urethane varnish[3]	20
Paraffin wax[4]	1
Chemical (mildewcide)	0-5
Mineral spirits solvent	79-74

[1]See reference (*14*) for a more detailed description.

[2]Final composition of a typical water-repellent preservative would be: wax--1 pct; chemical-5 pct; varnish resin-20 pct; solvent-74 pct.

[3]Contained 50 percent solids (resin).

[4]Several water repellents were prepared with a paraffin wax content of 0.5-2 percent.

Appendix III

Treatment formulations

Treatment formulation No.	Description	Chemical	Concentration	Comments
			Pct	
		MINERAL SPIRITS FORMULATIONS		
1	Control	None	—	—
2	Mineral spirits	None	—	Mineral spirits dip
3	Sealer	None	—	10 percent resin in mineral spirits
4	WR	None	—	0.25 percent wax in sealer
5	WR	None	—	0.5 percent wax in sealer
6	WR	None	—	1.0 percent wax in sealer
7	WR	None	—	2.0 percent wax in sealer
8	WR	None	—	Commercial preparation
9	WR	None	—	Commercial preparation
10	WRP	Penta	2.5	1
11	WP	Penta	2.5	1
12	WRP	Penta	5.0	1
13	WP	Penta	2.5	1
14	WRP	Penta	5.0	1, Commercial preparation
15	WRP	Penta +	2.5	1
		ZINAP	1.0	2
16	WP	Penta +	2.5	1
		ZINAP	1.0	2
17	WRP	Penta +	2.5	1
		CONAP	1.0	2
18	WP	Penta +	2.5	1
		CONAP	1.0	2
19	WRP	Penta +	2.5	1
		CO-8-Q	0.6	2
20	WP	Penta +	2.5	1
		CO-8-Q	0.6	2
21	WRP	CONAP	0.5	2
22	WP	CONAP	0.5	2
23	WRP	CONAP	1.0	2
24	WP	CONAP	1.0	2
25	WRP	CONAP	2.0	2
26	WP	CONAP	2.0	2
27	WRP	ZINAP	0.5	2
28	WP	ZINAP	0.5	2
29	WRP	ZINAP	1.0	2

Treatment formulations--con.

Treatment formulation No.	Description	Chemical	Concentration	Comments
			Pct	
	MINERAL	SPIRITS	FORMULATIONS--con.	
30	WP	ZINAP	1.0	2
31	WRP	ZINAP	2.0	2
32	WP	ZINAP	2.0	2
33	WRP	CO-8-Q	0.3	1
34	WP	CO-8-Q	0.3	1
35	WRP	CO-8-Q	0.6	1
36	WP	CO-8-Q	0.6	1
37	WRP	CO-8-Q	1.2	1
38	WP	CO-8-Q	1.2	1
39	WRP	TBTO	0.5	1
40	WP	TBTO	0.5	1
41	WRP	TBTO	1.0	1
42	WP	TBTO	1.0	1
43	WRP	TBTO	2.0	1
44	WP	TBTO	2.0	1
45	WRP	CONAP	2.0	2, Commercial preparation
46	WRP	ZINAP	2.0	2, Commercial preparation
		WATERBORNE	FORMULATIONS	
47	WP	CrO_3	1.25	2,3
48	WP	CrO_3	2.5	2,3
49	WP	CrO_3 + $Cu(NO_3)_2$	1.25 1.25	2,3 Acid formulation (reference (*10*))
50	WP	CrO_3 + $Cu(NO_3)_2$	1.25 1.25	2,3 Ammoniacal formulation (reference (*10*))
51	WP	Na_2MoO_4	2.5	2,3
52	WP	Na_2MoO_4 + $Cu(NO_3)_2$	1.25 1.25	2,3 —

[1]Concentration expressed as weight percent of chemical used.

[2]Concentration expressed as weight percent of heavy metal (zinc, copper, chromium, or molybdenum).

[3]Aqueous solution, all others used mineral spirits.

Appendix IV

Wet weight retention (percent) of dip treatments for post and rail specimens

Treatment formulation No.[1]	Solution retention[2]			Treatment formulation No.[1]	Solution retention[2]		
	1	2	3		1	2	3
	— — —*Pct*— — —				— — —*Pct*— — —		
1	—	—	—	27	3.4	3.8	3.1
2	—	—	—	28	3.1	3.4	3.8
3	2.2	3.0	2.6	29	3.7	3.5	3.3
4	2.2	2.2	3.4	30	3.9	3.5	3.3
5	3.4	1.8	2.1	31	4.1	4.6	4.4
6	2.1	2.3	4.3	32	4.5	4.6	3.9
7	4.3	2.6	2.5	33	3.6	4.2	3.7
8	1.7	2.0	2.4	34	3.5	4.5	3.1
9	1.6	3.8	2.9	35	3.9	4.0	4.2
10	3.3	2.9	2.8	36	4.4	4.7	4.5
11	2.4	2.5	2.3	37	4.6	4.4	4.1
12	2.6	3.1	2.7	38	3.6	4.2	3.7
13	3.0	2.1	4.1	39	4.5	4.4	4.5
14	3.0	4.1	4.0	40	4.1	4.5	3.2
15	3.1	2.1	3.9	41	4.5	3.2	4.3
16	2.0	4.3	3.5	42	4.6	3.2	4.2
17	3.4	2.8	2.8	43	4.4	4.7	3.2
18	3.3	2.8	2.8	44	5.3	3.3	4.4
19	3.2	2.6	3.5	45	4.3	3.3	4.0
20	3.0	2.9	3.0	46	2.8	3.2	4.0
21	2.7	2.8	2.6	47	4.2	4.6	4.9
22	3.3	2.8	3.2	48	6.4	6.7	4.4
23	3.3	2.9	3.1	49	6.0	4.6	5.6
24	3.2	3.5	3.0	50	4.7	5.0	3.5
25	3.5	3.4	3.4	51	4.5	3.7	3.6
26	3.2	3.2	3.6	52	4.3	8.8	4.1

[1]See appendix III.

[2]Each set (1,2,3) consisted of 3 matched specimens, 1 for each of the 3 exposure sites.

PESTICIDE PRECAUTIONARY STATEMENT

This publication reports research involving pesticides. It does not contain recommendations for their use, nor does it imply that the uses discussed here have been registered. All uses of pesticides must be registered by appropriate State and/or Federal agencies before they can be recommended.

CAUTION: Pesticides can be injurious to humans, domestic animals, desirable plants, and fish or other wildlife — if they are not handled or applied properly. Use all pesticides selectively and carefully. Follow recommended practices for the disposal of surplus pesticides and pesticide containers.