U.S. DEPARTMENT OF AGRICULTURE • FOREST SERVICE • FOREST PRODUCTS LABORATORY • MADISON, WIS.
In Cooperation with the University of Wisconsin

U. S. FOREST SERVICE
RESEARCH NOTE
FPL-049
May 1964

A STUDY OF WIND STRESSES IN THREE TYPICAL POLE BUILDING FRAMES

Summary

This Research Note presents results of a preliminary study conducted to indicate the position of maximum stress along the axis of poles in three types of pole building frames in common use. Analysis was made by the matrix slope-deflection method using a high-speed digital computer, and was based on a loading condition considered critical for the three types of buildings, namely, wind from one side with the windward side of the building open. Connections were assumed to be either pinned or fixed, and for each condition under consideration, final moments, forces, and deformations were determined and compared.

In most instances, results indicated the position of maximum stress in the poles to be at the groundline or below. Recommendations for further study are included, and on the basis of results, a test method is proposed for determining the strength of poles in this type of building.

A STUDY OF WIND STRESSES IN THREE TYPICAL POLE BUILDING FRAMES

By

JOHN E. PARKER Engineer

Forest Products Laboratory,[1] Forest Service
U.S. Department of Agriculture

Introduction

Present allowable stresses in wood poles used for transmission lines were derived from the results of numerous static bending tests of poles using methods that apply maximum stress at the groundline.[2] The average strength obtained by such methods for each species is reduced by suitable factors specified in the National Electrical Safety Code to obtain design values.

However in pole-type buildings, the poles acting as columns are an integral part of the entire structure and are subjected to loading conditions different from those of a simple cantilevered pole. The stress distribution in a given pole depends upon such factors as the relative stiffness of each member in the building, the external loading, the fixity of all joints--including that of the poles at the groundline, and the types and positions of intermediate attached supports.

Because the poles are tapered and have a smaller cross-sectional area at the top, the possibility of the maximum stress occurring at a position different than that observed in the cantilever tests was investigated. Other factors that could alter the position of maximum stress are: an axial load on the pole; restraint at the top of the pole against rotation; forces caused by attached bracing at intermediate points; and conditions other than complete fixity at the groundline.

---

[1] Maintained at Madison, Wis., in cooperation with the University of Wisconsin.

[2] American Society for Testing and Materials. Standard methods of static tests of wood poles. ASTM D 1036-58. 1958.

This study was based on two-dimensional pole frames rather than three-dimensional structures. This afforded a simplified approach to obtaining a preliminary indication of stress distributions, needed in determining whether design values for transmission line poles were also applicable to poles in building frames.

Prior to selecting the three most representative types of pole building frames for structural analysis, an extensive study was made of numerous frame types from various information sources, including: the U.S. Department of Agriculture, the Wick Building Systems, Inc., the Wisconsin State Industrial Commision, and the American Wood Preservers' Institute.[3]

The three types chosen for analysis are shown in figure 1, and are classified as follows:

Type 1. Interior poles and no knee braces (fig. 1A)
Type 2. Knee braces and no interior poles (fig. 1B)
Type 3. Interior poles, knee braces, and truss (fig. 1C)

Method of Analysis

Pole building frames (termed bents) are structurally indeterminate, The degree of external indetermination may vary from a minimum of three for a bent with two poles to 3n minus 3 for a bent with n number of poles. For example, the bent shown in figure 1A is indeterminate to the ninth degree.

An approximate method[4] may be used to analyze an indeterminate structure. Distribution of external loads on the poles, according to assumed ratios, will give the horizontal and vertical forces on the poles. Once the horizontal force is obtained, the moment and the bending stress may be calculated at any point on the pole by estimating the position of the inflection point (the point of zero moment).

A fallacy of this method is that the structure is analyzed as a series of members acting separately. Actually, the structure is made up of members acting together, and the stress and deformation of each member is dependent upon the action of the entire structure.

---

[3] Patterson, Donald. How to design pole-typc buildings. Amer. Wood Preservers' Institute. 1962.

[4] Meader, N. F., and Hurst, H. J. Tilt-up rigid timber frames. Paper No. 63-430 presented at the 1963 Annual Meeting of the Amer. Soc. of Agr. Engineers. 1963.

If a pole building bent were a rigid frame, a method of indeterminate structural analysis, such as slope deflection or moment distribution, could be used to solve for the moments caused by a given external load. The bent shown in figure 1A could be analyzed by moment distribution in a short time if all joints were assumed to be rigid, because it has only one degree of freedom in sidesway. However, many bents contain members that have little or no rotational restraint at their connections. A truss supported by two poles (fig. 1C) is a typical example of a frame containing pinned joints.

A method of analysis, known as the matrix–slope–deflection method, was recently developed by Prof. C. K. Wang of the University of Wisconsin, Department of Civil Engineering. The method is well adapted to frames with a high degree of indetermination and which contain pinned as well as rigid joints. It was designed for high–speed digital computers that are capable of solving the large number of simultaneous equations in a matter of seconds. The matrix–slope–deflection method was used to analyze the three types of pole buildings shown in figure 1. The large matrices involved required the use of a digital computer with a large number of storage spaces, and for this reason, the Model CDC 1604 computer at the University of Wisconsin was used for this study.

The three types of buildings were analyzed for one condition of loading only, namely, that of wind loading alone with the windward side of the building at least 30 percent open. The spacing between the pole frames ranged from 12 to 20 feet. The wind pressure coefficients used were those recommended by the Metal Building Manufacturers Association[5] and the American Society of Civil Engineers, Subcommittee No. 31.[6] The condition of wind load alone with the windward side open, was found, from preliminary studies, to produce a greater stress in the poles than the condition of wind load with the windward side closed plus snow load on the leeward portion of the roof. Dead load, if included, would increase the total compressive stress in the poles by less than 100 pounds per square inch, for either type of loading.

The pole building bent with interior poles and no braces was analyzed for two different conditions of fixity of joints. For one condition, it was assumed that the poles were completely fixed at the groundline and that the pole–rafter connections were rigid (fig. 2A). The effect of axial deformation in each member was neglected. The stiffness factors for each pole were determined using the conjugate beam method, with a straight–line approximation for the variation of

---

[5] Metal Building Manufacturers Association, Cleveland, Ohio. Recommended design practices manual. 1959.

[6] American Society of Civil Engineers, Subcommittee No. 31 on steel. Wind bracing in steel buildings. ASCE Trans., Vol. 105, pp. 1713–1719. 1940.

bending moment divided by stiffness. The effect of the variation in the moment of inertia along the length of the poles was neglected in computing the fixed end moments. A numerical method was used later to account for the effect of the variation in moment of inertia on the fixed end moments. The change in the final moments was found to be very small.

For the other condition, it was assumed that the poles were completely fixed at a point 1.5 feet below the groundline (approximately one-fourth of the embedment depth) and that the pole-rafter connections were pinned (fig. 2B). Axial deformation of the poles was assumed to be negligible, and because the rafters were assumed to be pinned at both ends, the deformation was in the axial direction alone.

The final moments and forces for both conditions are shown in figures 3A and B. The actual restraint at the connections and at the groundline would be somewhere between the two assumed extreme conditions, so that the final moment diagram would be between the two moment diagrams shown. A comparison of the stresses in the poles for the two extreme conditions of joint restraint is shown in table 1.

The maximum horizontal deflection at the tops of the poles was 0.85 inch, with complete fixity at all the joints. With pinned rafter-pole connections, the horizontal deflection was 4.01 inches.

The pole building bent with knee braces and no interior poles was also analyzed for the two types of joint restraint. In one type, it was assumed that all connections were rigid, including complete fixity at the groundline (fig. 4A); also, that axial deformation in all members was negligible. In the other type, it was assumed that the knee braces and the tie at the ridge had no rotational restraint at their connections, and that all other connections were rigid (fig. 4B). Only axial deformation was considered in the knee braces and tie. It was assumed, however, to be negligible in the other members.

The stiffness factors for both types were computed as before. The effect of the taper of the poles on the fixed end moments was not considered for this type of bent.

The final moment and forces for both conditions are shown in figures 5A and B. The horizontal deflections at the knee brace-rafter connections and the horizontal tie-rafter connections varied from 4 to 5 inches for both conditions, but were slightly higher with the knee braces fixed at both ends. A comparison of the stresses in the poles for the two conditions is shown in table 2.

The pole building bent with interior poles, knee braces, and truss was analyzed for one condition only (fig. 6). It was assumed that each connection and splice was pinned, and that axial deformation was negligible in the rafters, poles, and the bottom chord of the truss. Only axial deformation was considered in the other members. The stiffness factors and fixed end moments were computed as before. The final moments and forces are shown in figure 7, and the stresses in the poles are given in table 3.

The final moments, forces, and deformations for each analysis were checked for accuracy. Static checks were made by adding the moments and forces at each joint and checking for equilibrium. Sidesway equilibrium was checked by ascertaining that the summation of the horizontal reactions on the poles at the ground level equaled the total external horizontal load. Rotational and horizontal displacements at a few selected points were checked by the conjugate beam method.

Discussion of Results

The final moments obtained from the analysis of bent type 1 (fig. 3), show that wind stresses at the groundline in all the poles, except pole W are considerably less for a rigid frame than for a pin-connected frame. For the pin-connected frame, the moments are approximately equal. This can be explained by examining the degree of freedom in sidesway. If a frame has only one degree of freedom in sidesway, such as bent type 1, the deflections at the top of the poles are very nearly equal. If the rotational restraints at the end of the poles are the same, the final moments will depend only upon the relative stiffnesses of the poles.

A comparison of figures 5A and 5B shows that the effect of the amount of rotational restraint at the ends of knee braces and ties is not significant. The fact that the moment at the base of the windward pole is greater than the moment at the base of the leeward pole can be explained by using the same reasoning as for bent type 1. The loading on bent type 2 caused an upward deflection of the ridge, resulting in a greater horizontal deflection at the top of the windward pole than at the top of the leeward pole. Because the two poles have equal stiffness, the amount of rotational restraint is the only other variable affecting the moments in the poles.

The large difference in the stiffness of the poles shown in figure 6 is the major reason for the variation in the moments at the base of the poles (fig. 7). The unsymmetrical shape of the bent is another reason for the variation.

Conclusions

The principal conclusions drawn from this study are as follows:

1. The wind loading on pole buildings with the windward side open produces the largest stresses on the poles.
2. The moments in the poles produced by wind loads are dependent upon deflection, rotation, and stiffness of the poles.
3. In most instances with fixed pole–rafter connections, it is safe to assume that the maximum stress in the poles occurs at the groundline or below. However, poles usually contain more knots and have a lower density at the top than at the bottom. This situation results in a lower strength at the top, so that the section at which the stress is a maximum is not necessarily the critical section.
4. Insofar as the critical section occurs at the groundline, design stresses for transmission line poles are also applicable to poles in building frames.

Recommendations for Further Study

For this study, the poles were assumed to be completely fixed at the groundline or at a point one–fourth of the embedment depth below the groundline. The actual rotational restraint at the groundline in most instances is probably less than that assumed for this study. The effect of rotational restraint at connections or at the groundline of the pole could be studied by assuming values for a restraint factor ranging from zero (for an unrestrained condition) to one (for a fixed condition).

The effect of the added rigidity of the end walls, side walls, and roofing material on pole building bents was not considered in this study. The effect of siding and roofing has been investigated by Meador and Hurst,[4] but additional research is needed to determine the amount of additional strength obtainable from the exterior skin.

The frictional resistance against uplift of the soil or concrete around the pole was not considered in this study, and should be investigated. Wind loads with the windward side open produce an appreciable amount of uplift that must be counteracted by the frictional force on the poles, or by other means of transferring the force to the soil.

Figure 8 shows a suggested test arrangement and the resulting moment diagram for determining the strength of wood poles in bending, at any desired location along the axis of the poles. The moment variation produced by this test method simulates the moment variation produced by wind load on a pole with a knee brace. A typical distance from tip to knee brace is 5 feet, regardless of the pole length, and the points of application of the load, P, could be varied to give information on the variation in strength along the axis of the poles.

Table 1.--Effect of joint restraint on wind stresses in poles of type 1 pole building bents

Type of joint restraint	Wind stress: Pole designation[1] W	X	Y	Z
	P.s.i.	P.s.i.	P.s.i.	P.s.i.
AT TOP OF POLE				
Fixed	1,430	880	1,130	2,050
Pinned	0	0	0	0
AT BOTTOM OF POLE				
Fixed	2,220	700	950	1,930
Pinned	1,970	1,190	1,960	3,240

[1]Poles are designated as shown in figure 3A.

Table 2.--Effect of fixity of knee braces and tie on wind stresses in poles of type 2 pole building bents

Type of restraint at knee braces and tie	Wind stress: Pole designation[1] W	X
	P.s.i.	P.s.i.
AT KNEE BRACE		
Fixed	1,220	1,980
Pinned	950	1,660
AT GROUNDLINE		
Fixed	5,140	2,930
Pinned	4,640	2,820

[1]Poles are designated as shown in figure 5A.

Table 3.--Wind stresses in poles of type 3 pole building bents

Location of stress	Wind stress: Pole designation[1] W	X	Y	Z
	P.s.i.	P.s.i.	P.s.i.	P.s.i.
At brace	0	970	1,250	530
At groundline of pole	3,430	2,250	1,380	300

[1]Poles are designated as shown in figure 7.

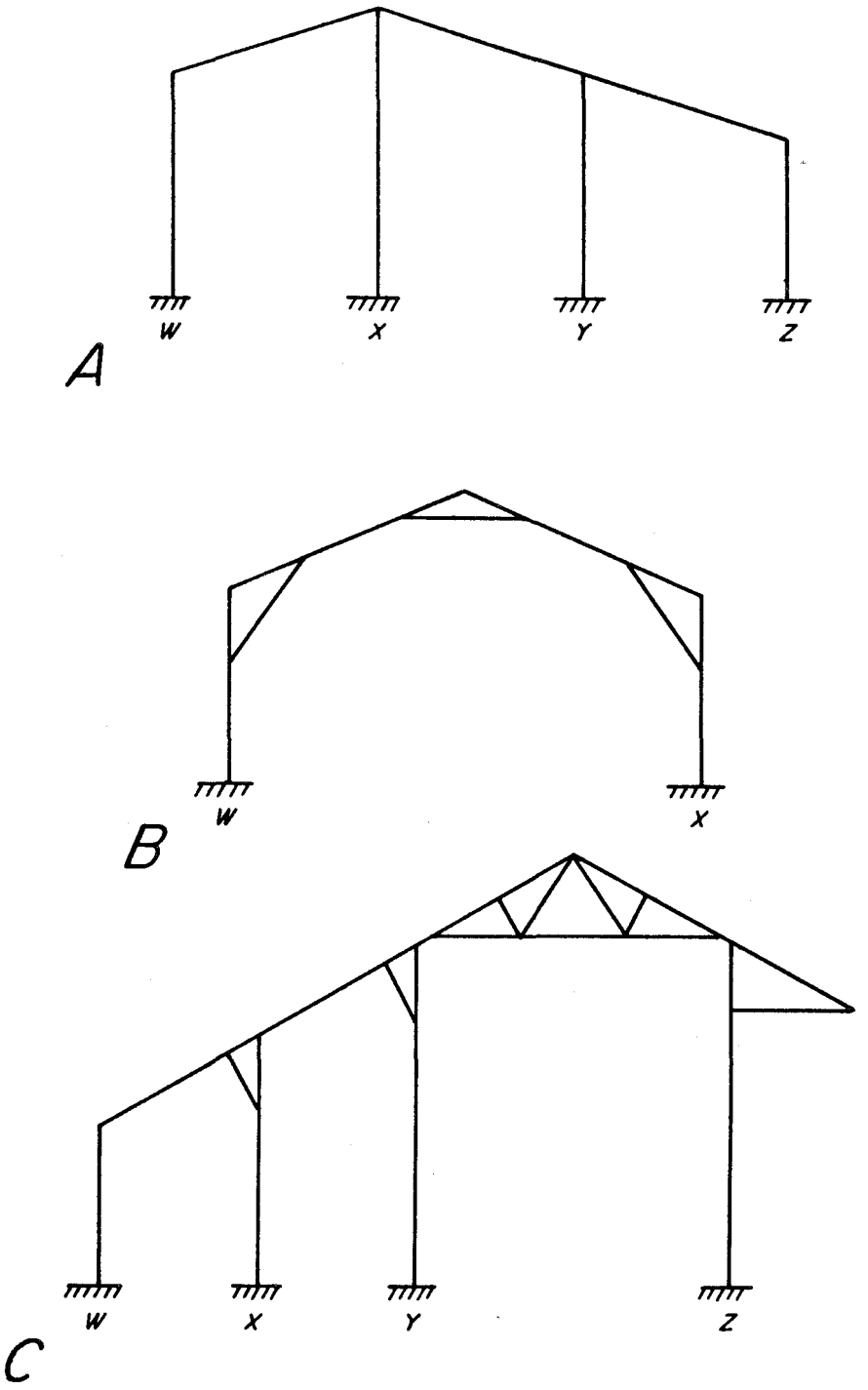

M 126 553

Figure 1.--The three types of pole building frames (bents) chosen lor analysis: A, interior poles and no knee braces (type 1); B, knee braces and no interior poles (type 2); and C, interior poles, knee braces, and truss (type. 3).

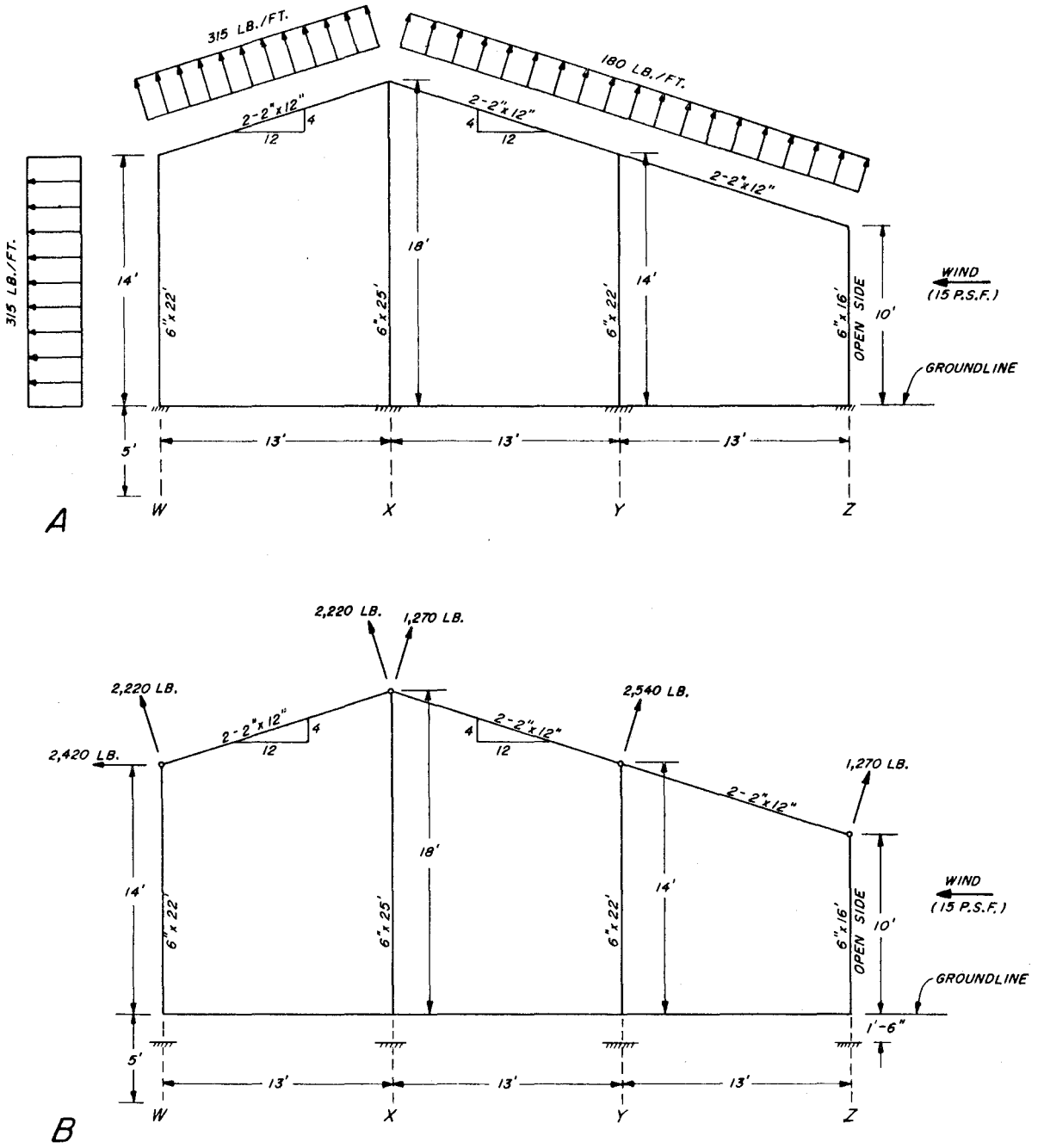

M 126 557

Figure 2.--Dimensions, properties, and loading for type 1 pole building bents: A, with rigid pole-rafter connections; B, with pinned pole-rafter connections.

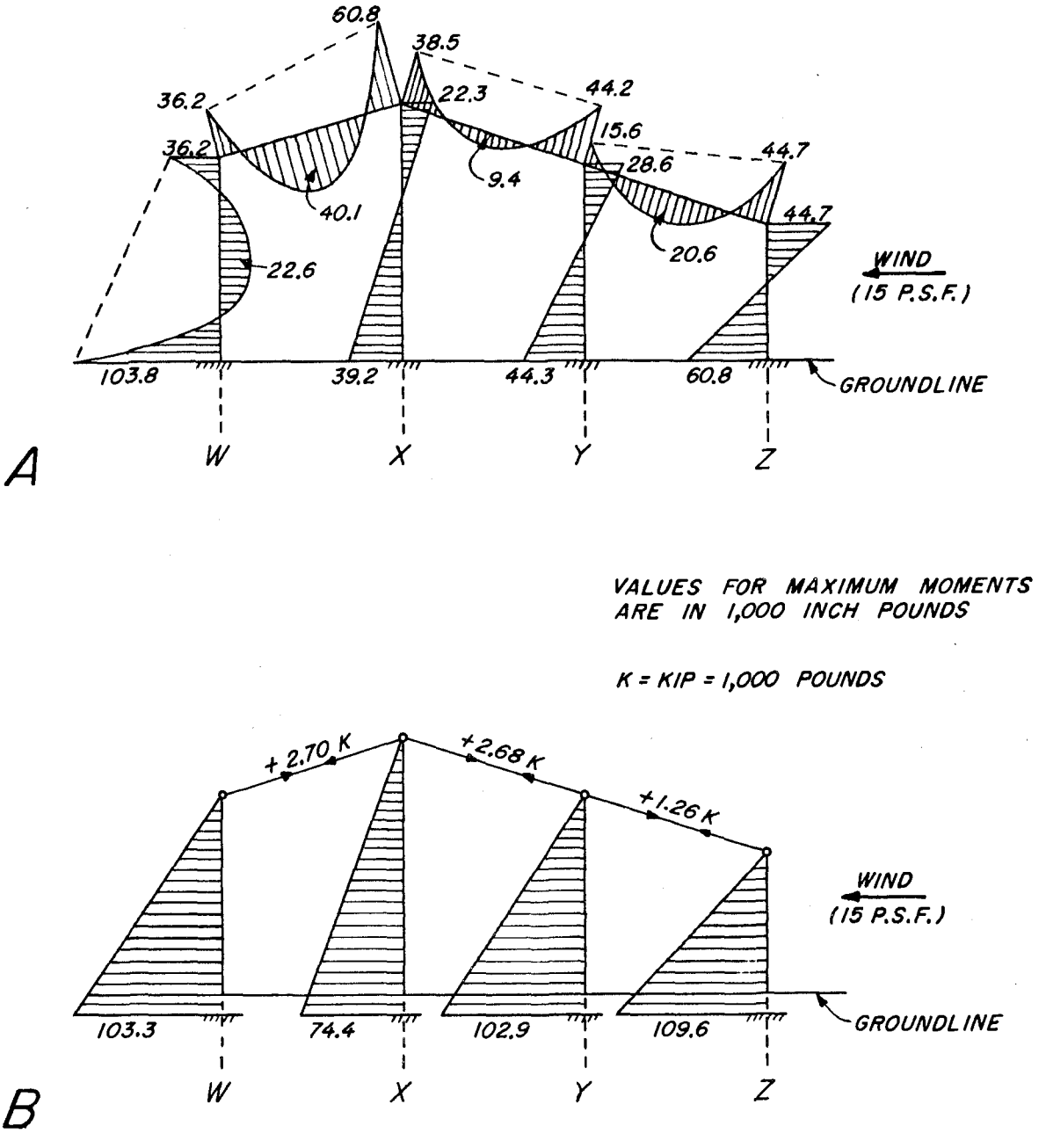

M 126 555

Figure 3.--Moment diagram and forces for type 1 pole building bents: A, with rigid pole-rafter connections; B, with pinned pole-rafter connections.

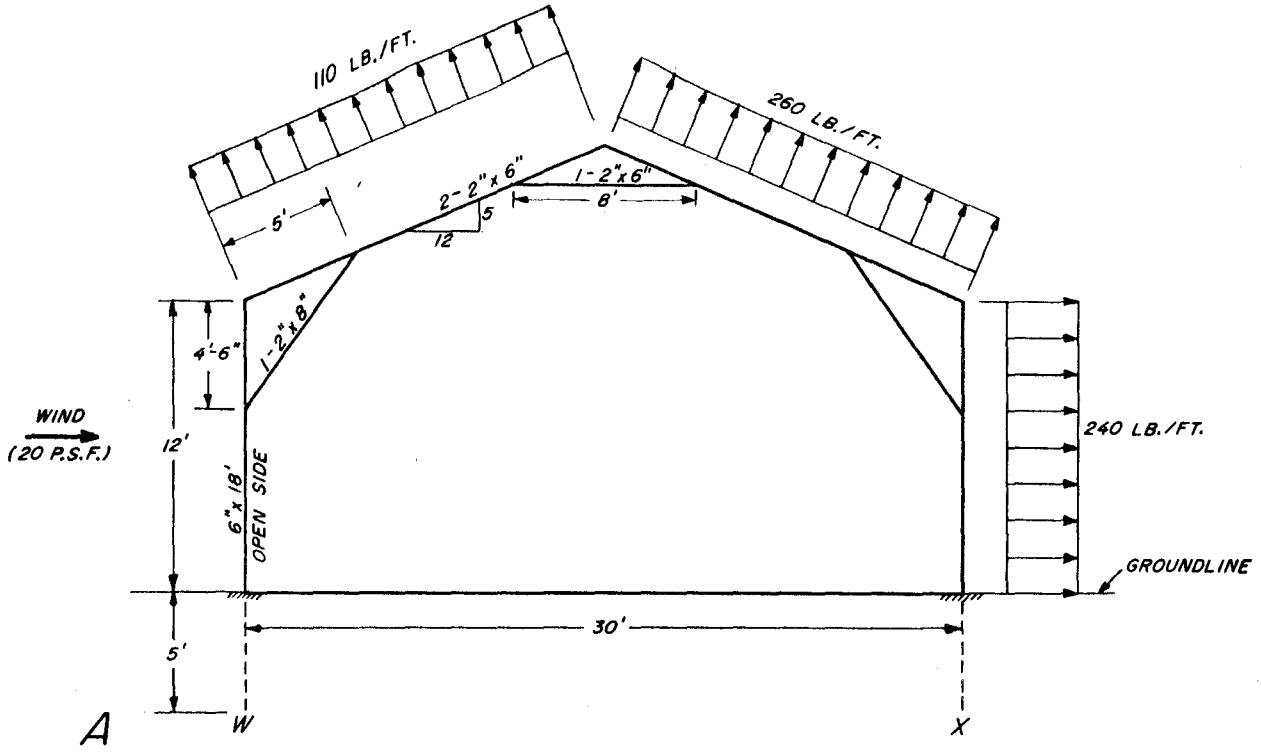

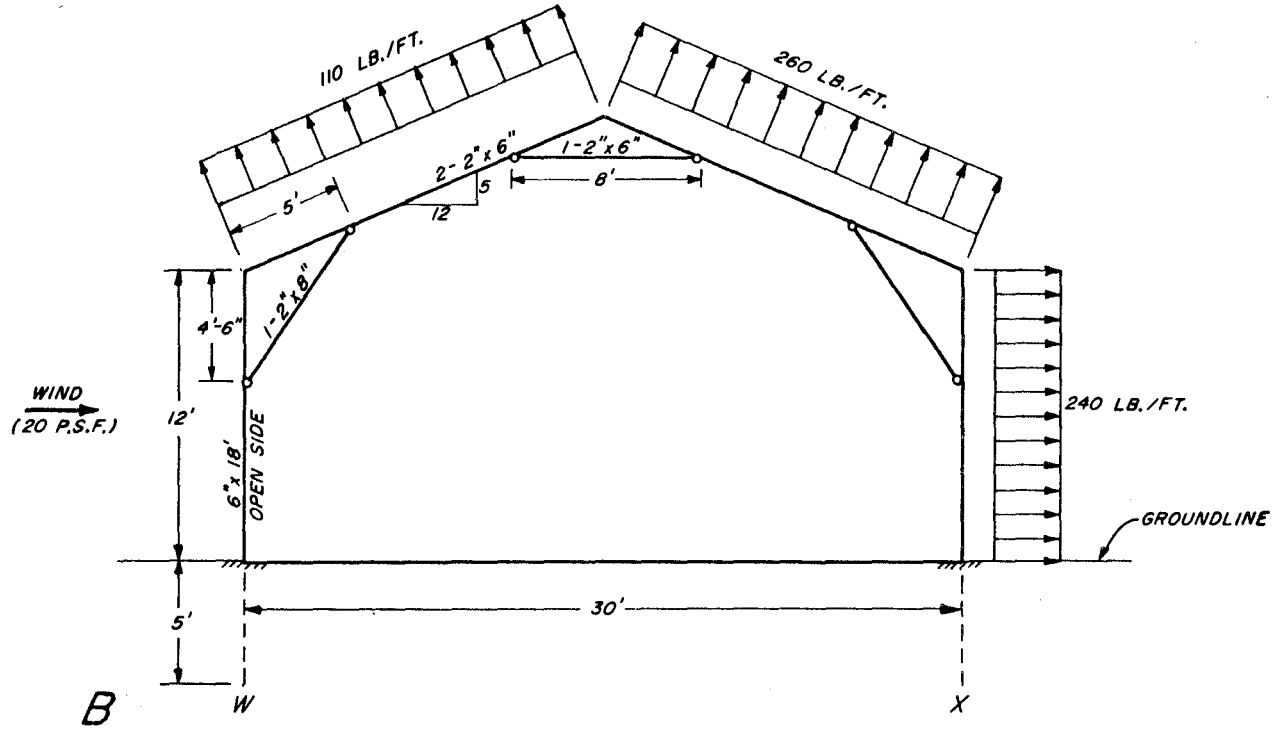

M 126 556

Figure 4.--Dimensions, properties, and loading for type 2 polo building bents: A, with knee braces fixed; B, with knee braces pinned.

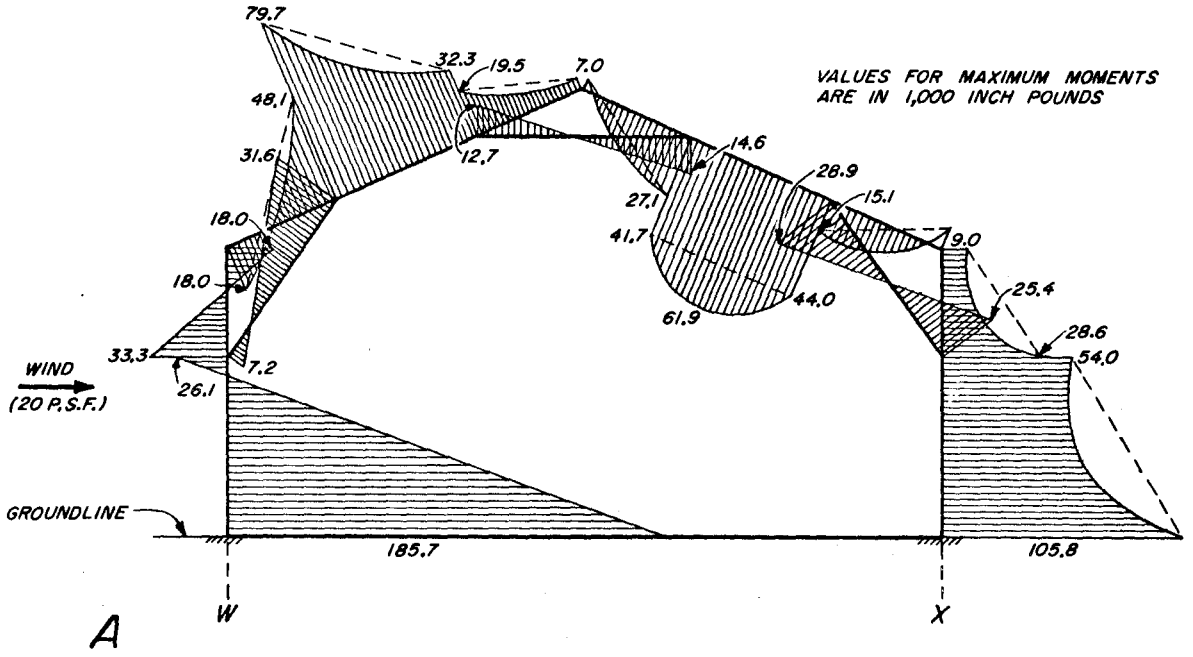

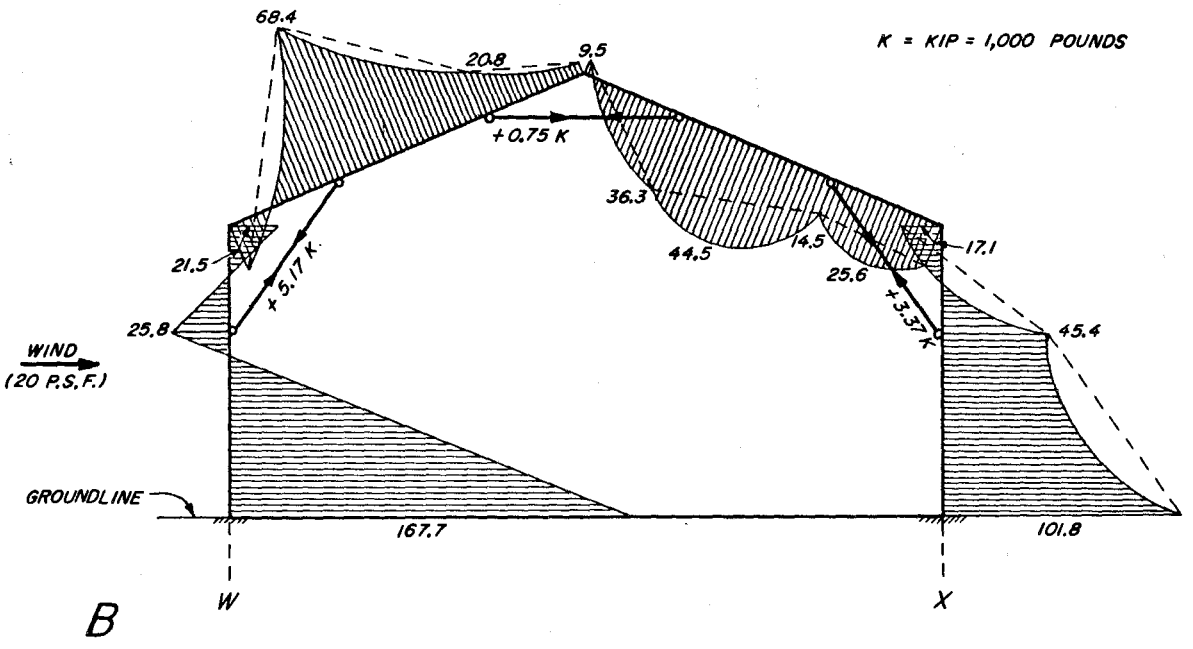

M 126 558

Figure 5.--Moment diagram and forces for type 2 pole building bents: A, with braces fixed: B, with braces pinned.

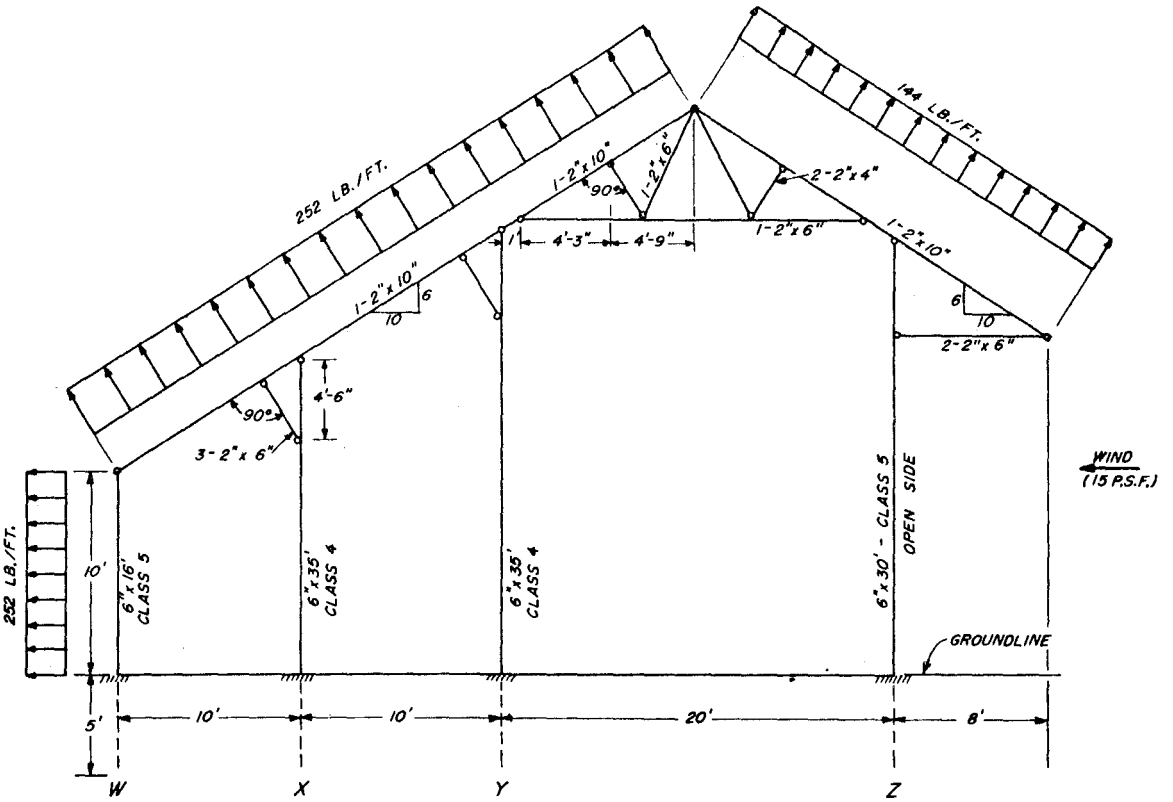

Figure 6.--Dimensions, properties, and loading for type 3 pole building bents.

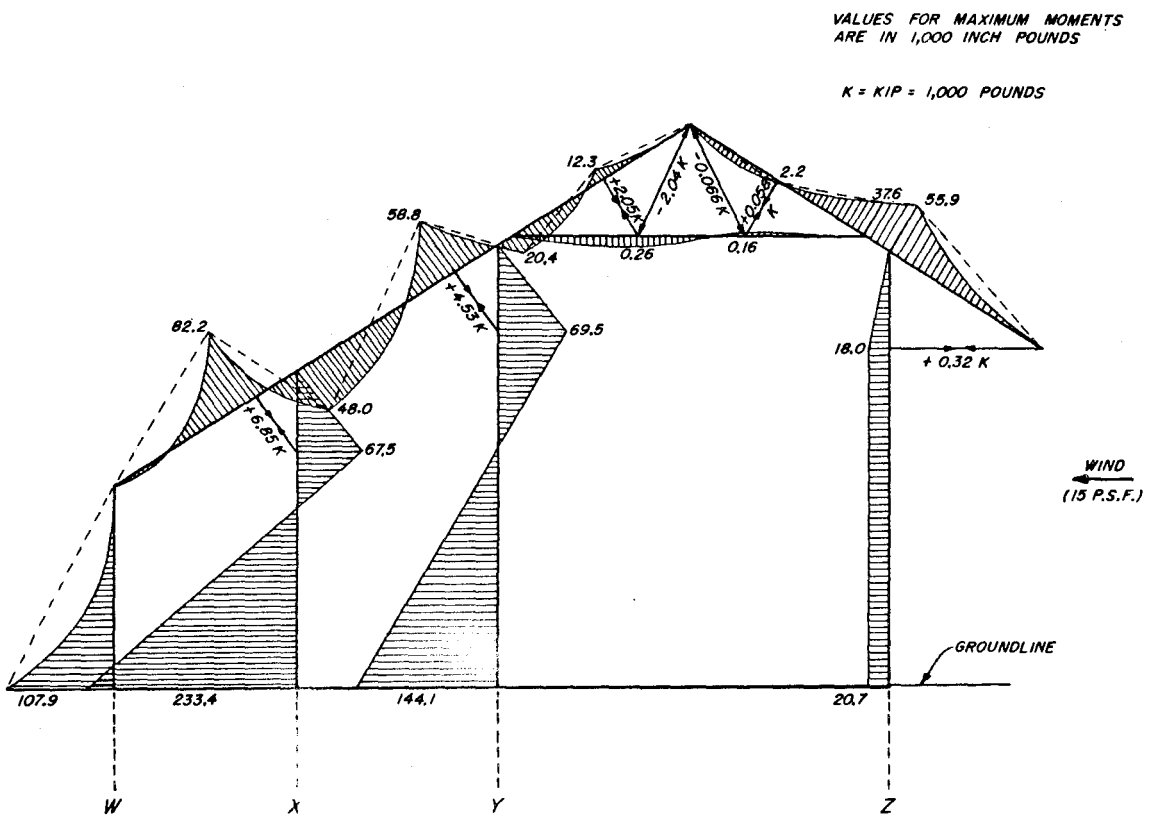

Figure 7.--Moment diagram and forces for type 3 pole building bents.

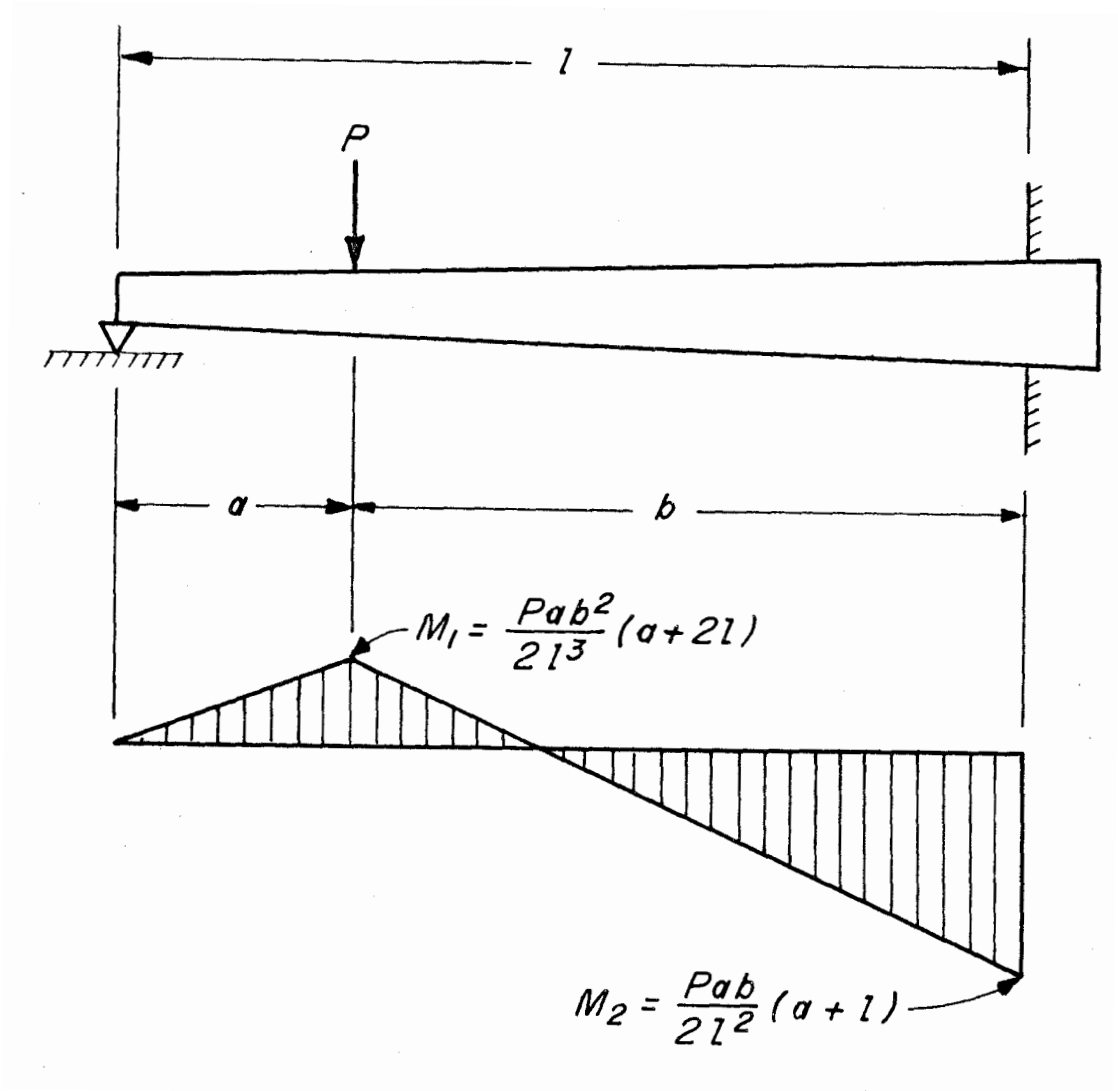

M 126 554

Figure 8.--Sketch of suggested pole test method with moment diagram.

PUBLICATION LISTS ISSUED BY THE

FOREST PRODUCTS LABORATORY

The following lists of publications deal with investigative projects of the Forest Products Laboratory or relate to special interest groups and are available upon request:

Box, Crate, and Packaging Data

Chemistry of Wood

Drying of Wood

Fire Protection

Fungus and Insect Defects in Forest Products

Glue and Plywood

Growth, Structure, and Identification of Wood

Furniture Manufacturers, Woodworkers, and Teachers of Woodshop Practice

Logging, Milling, and Utilization of Timber Products

Mechanical Properties of Timber

Pulp and Paper

Structural Sandwich, Plastic Laminates, and Wood–Base Components

Thermal Properties of Wood

Wood Finishing Subjects

Wood Preservation

Architects, Builders, Engineers, and Retail Lumbermen

Note: Since Forest Products Laboratory publications are so varied in subject matter, no single catalog of titles is issued. Instead, a listing is made for each area of Laboratory research. Twice a year, December 31 and June 30, a list is compiled showing new reports for the previous 6 months. This is the only item sent regularly to the Laboratory's mailing roster, and it serves to keep current the various subject matter listings. Names may be added to the mailing roster upon request.