United States
Department of
Agriculture

Forest Service

Forest
Products
Laboratory

U.S. DOT
Federal Highway
Administration

General
Technical
Report
FPL–GTR–87

Plans for Crash-Tested Bridge Railings for Longitudinal Wood Decks

Michael A. Ritter
Ronald K. Faller
Paula D. Hilbrich Lee
Barry T. Rosson
Sheila Rimal Duwadi

Abstract

In the past decade, bridge railing design criteria have moved away from static-load design and have focused on full-scale crash testing as a more appropriate and reliable means of evaluating bridge railings. The five bridge railing plans presented reflect the results of a cooperative research project between the Midwest Roadside Safety Facility, University of Nebraska–Lincoln; the USDA Forest Service, Forest Products Laboraotry; and the Federal Highway Administration. The project objective was to develop and crash test bridge railings and approach railing transitions for longitudinal wood bridge decks. The bridge railings were completed in accordance with AASHTO Performance Level 1, Performance Level 2, and NCHRP Report 350 Test Level 4 (TL–4). Approach railings were tested or adapted from previous testing in accordance with NCHRP Report 230. Full drawing sets are provided in customary U.S. and SI units of measure. The testing procedures, results, and drawings have been approved by the Federal Highway Administration Federal-Aid and Design Office for use on Federal-aid highway projects.

Keywords: Bridge, wood, railing, deck, crash-tested

September 1995

Ritter, Michael A.; Faller, Ronald K.; Lee, Paula D. Hilbrich; Rosson, Barry T.; Duwadi, Sheila Rimal. 1995. Plans for Crash-Tested Bridge Railings for Longitudinal Wood Decks. Gen. Tech. Rep. FPL–GTR–87. Madison, WI: U.S. Department of Agriculture, Forest Service, Forest Products Laboratory. 27 p.

A limited number of free copies of this publication are available to the public from the Forest Products Laboratory, One Gifford Pinchot Drive, Madison, WI 53705–2398. Laboratory publications are sent to more than 1,000 libraries in the United States and elsewhere.

The Forest Products Laboratory is maintained in cooperation with the University of Wisconsin.

The United States Department of Agriculture (USDA) prohibits discrimination in its programs on the basis of race, color, national origin, sex, religion, age, disability, political beliefs, and marital or familial status. Persons with disabilities who require alternative means of communication of program information (braille, large print, audiotape, etc.) should contact the USDA Office of Communications at (202) 720–2791. To file a complaint, write the Secretary of Agriculture, U.S. Department of Agriculture, Washington, DC 20250, or call (202) 720–7327 (voice), or (202) 720–1127 (TTD). USDA is an equal employment opportunity employer.

Plans for Crash-Tested Bridge Railings for Longitudinal Wood Decks

Michael A. Ritter, Research Engineer[1]
Ronald K. Faller, Research Engineer[2]
Paula D. Hilbrich Lee, General Engineer[1]
Barry T. Rosson, Assistant Professor[2]
Sheila Rimal Duwadi, Research Structural Engineer[3]

[1]USDA Forest Service, Forest Products Laboratory
[2]Midwest Roadside Safety Facility, University of Nebraska-Lincoln
[3]Federal Highway Administration, Turner-Fairbank Research Center

Introduction

Bridge railings have historically been designed based on static-load design criteria. In the past decade, design criteria has refocused toward full-scale crash testing as a more appropriate and reliable method of evaluating bridge railings. These plans reflect the results of a cooperative research project between the Midwest Roadside Safety Facility, University of Nebraska-Lincoln; the USDA Forest Service, Forest Products Laboratory; and the Federal Highway Administration. The objective of the project was to develop and crash test bridge railings and approach railing transitions for longitudinal wood bridge decks. The bridge railings were completed in accordance with AASHTO Performance Level 1 (PL-1) and Performance Level 2 (PL-2) requirements and are described in the cited reports. One bridge railing was also tested to the requirements of NCHRP Report 350, Test Level 4 (TL-4). Approach railings were tested or adapted from previous testing in accordance with NCHRP Report 230. For the convenience of the user, full drawing sets have been provided in customary U.S. and SI units. The testing procedures, results, and drawings have been approved by the Federal Highway Administration Federal-Aid and Design Office for use on Federal-aid highway projects.

The USDA Forest Service hereby gives notice that the information herein contained shall not create any warranty, express or implied. The person or organization using this information waives and relinquishes any and all claims against the United States of America, its officers, employees, and project cooperators, for any loss, damage, personal injury, or death incident to, or occurring as a consequence of, the use thereof.

Acknowledgments

We express sincere appreciation to Brent Prauner and Keith Robertson of the Midwest Roadside Safety Facility, University of Nebraska-Lincoln and Merv Eriksson of the USDA Forest Service, Northern Region, for their assistance in drawing preparation.

Specifications

AASHTO. 1989. Guide Specifications for Bridge Railings. Washington, DC: American Association of State Highway and Transportation Officials.

AASHTO. 1990. Standard Specifications for Transportation Materials and Methods of Sampling and Testing. Vol. 1: Specifications. Washington, DC: American Association of State Highway and Transportation Officials.

M111 Zinc (Hot-Dip Galvanized) Coatings on Iron and Steel Products
M133 Preservatives and Pressure Treatment Process for Timber
M168 Wood Products
M180 Corrugated Sheet Steel Beams for Highway Guardrail
M232 Zinc Coating (Hot-Dip) on Iron and Steel Hardware

ANSI/AASHTO/AWS D1.5-88. Bridge Welding Code. Washington, DC: American Association of State Highway and Transportation Officials.

ASTM. Annual Book of ASTM Standards. Philadelphia, PA: American Society for Testing and Materials.

ASTM A36-90	Standard Specification for Structural Steel
ASTM A47-84	Standard Specification for Ferritic Malleable Iron Castings
ASTM A307-92a	Standard Specification for Carbon Steel Bolts and Studs, 60,000 psi Tensile Strength
ASTM A325-92a	Standard Specification for Structural Bolts, Steel, Heat Treated, 120/105 ksi Minimum Tensile Strength
ASTM A722-90	Standard Specification for Uncoated, High-Strength Steel Bar for Prestressing Concrete

SAE J412. 1989. General Characteristics and Heat Treatment of Steels. Warrendale, PA. Society of Automotive Engineers.

References

Faller, R.K.; Ritter, M.A.; Holloway, J.C.; Pfeifer, B.G.; Rosson, B.T. 1992. Performance level 1 bridge railings for timber decks. In: Transportation Research Record 1419. Washington, DC: Transportation Research Board, National Research Council: 21-34.

NCHRP. 1981. Recommended procedures for the safety performance evaluation of highway appurtenances. NCHRP Rep. 230. Washington, DC: National Research Council, Transportation Research Board, National Cooperative Highway Research Program.

Ritter, M.A.; Post, E.R.; Faller, R.K. 1990. Vehicular railing systems for timber bridges: a program overview. Wood Design Focus. 1(4): 4-7.

Ritter, M.; Faller, R. 1994. Crashworthy bridge railing for longitudinal wood decks. In: PTEC 94 Timber shaping the future: Proceedings of Pacific Timber Engineering conference; 1994 July 11-15; Gold Coast, Australia. Queensland, Australia: Fortitude Valley MAC; 2: 298-307.

Ross, H.E., Jr.; Sicking, D.L.; Zimmer, R.A.; Michie, J.D. 1993. Recommended procedures for the safety performance evaluation of highway features, NCHRP Rep. 350. Washington, DC: National Research Council, Transportation Research Board, National Cooperative Highway Research Program.

Rosson, B.T.; Faller, R.K.; Ritter, M.A. [in press]. Performance level 2 and test level 4 bridge railings for timber decks. Paper presented at the 1995 annual meeting of the Transportation Research Board. Washington, DC: National Research Council, Transportation Research Board.

Comments

Comments on these drawings should be addressed to the Timber Bridge Team, Forest Products Laboratory, One Gifford Pinchot Drive, Madison, WI 53705-2398.

Contents

	Customary U.S. Units	Page
1	Glulam Timber Rail with Curb, AASHTO Performance Level 1	3
2	Glulam Timber Rail without Curb, AASHTO Performance Level 1	5
3	Steel Rail, AASHTO Performance Level 1	7
4	Steel Rail, AASHTO Performance Level 2	9
5	Glulam Timber Rail with Curb, NCHRP 350 Test Level 4	13
	SI Units	
1	Glulam Timber Rail with Curb, AASHTO Performance Level 1	16
2	Glulam Timber Rail without Curb, AASHTO Performance Level 1	18
3	Steel Rail, AASHTO Performance Level 1	20
4	Steel Rail, AASHTO Performance Level 2	22
5	Glulam Timber Rail with Curb, NCHRP 350 Test Level 4	26

Rail Drawings in Customary U.S. Units

University of
Nebraska
Lincoln

General Configuration

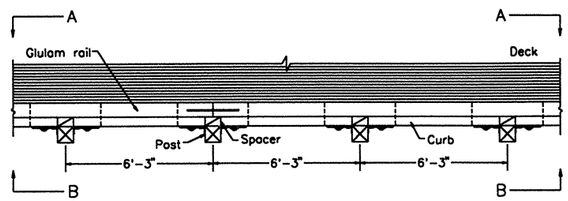

Plan

Section A–A

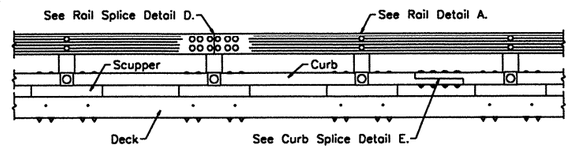

Refer to Sheet 2 for Approach Rail Transition.

Front Elevation

Section B–B

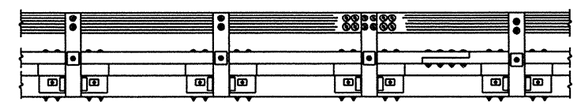

Back Elevation

A Railing Details

For stress-laminated decks, omit internal plate, post plates, and ASTM A722 steel bars.

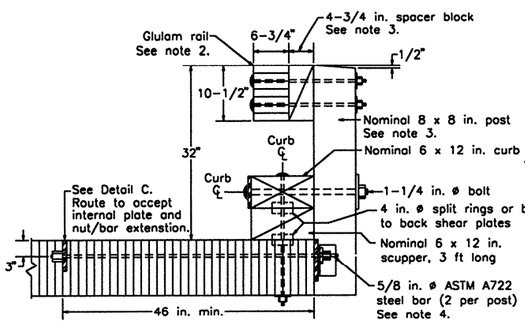

End View

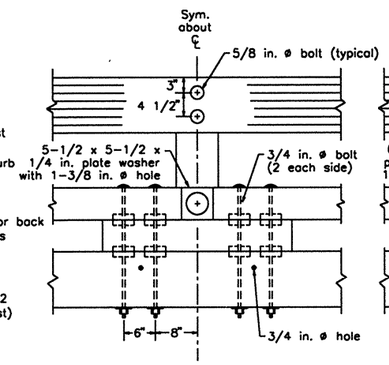

Front View

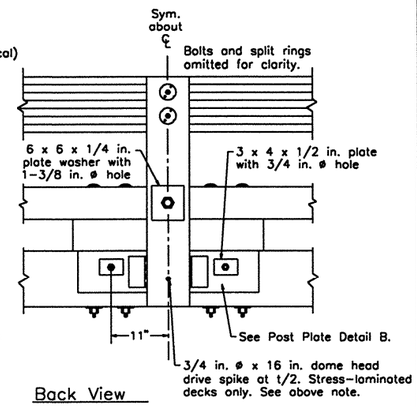

Back View

B Steel Post Plate

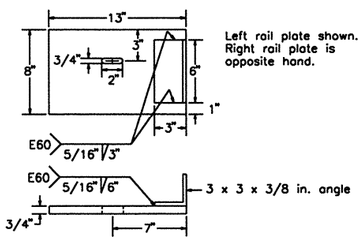

C Internal Steel Plate

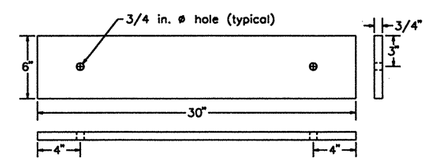

D Rail Splice Details

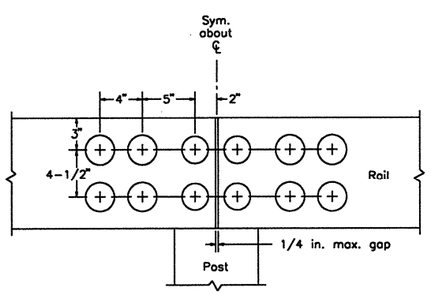

Front View

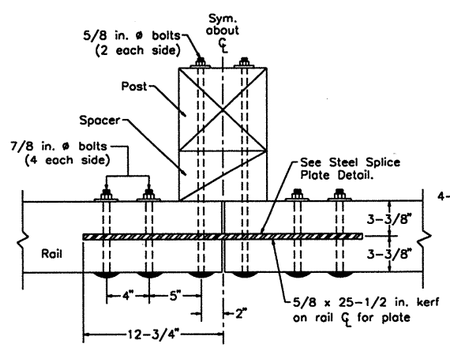

Plan View

Steel Splice Plate

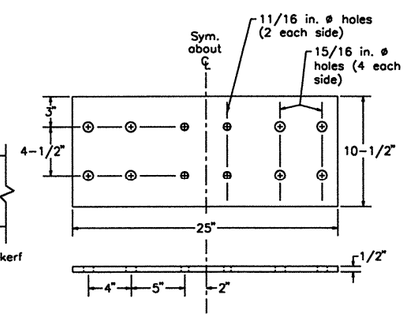

E Curb Splice Detail

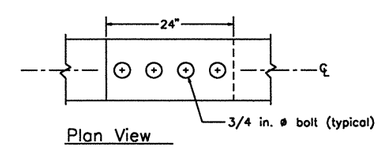

Plan View

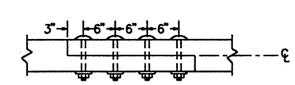

Side View

DESIGN

1. This bridge rail was successfully crash tested to the requirements for Performance Level 1 (PL-1), as outlined in the 1989 AASHTO Guide Specifications for Bridge Railings. It is adaptable to longitudinal stress-laminated, spike-laminated, nail-laminated and glued laminated timber decks which are 8 in. or greater in actual thickness.
2. Dimensions given for glued laminated timber rails are actual dimensions. The depth of the glulam timber rail may be increased to a maximum of 10-3/4 in. to allow for other standard glulam sizes. In such cases, detail dimensions shall be modified accordingly.
3. Dimensions for wood posts, curbs, and scuppers are given as nominal dimensions. Actual dimensions may be a maximum of 1/2 in. less than the stated nominal dimensions depending on material surfacing. Dimensions for spacer block depth are actual dimensions.
4. The steel deck reinforcing bars shown on the drawings are 5/8 in. diameter ASTM A722 bars. Other bar materials and/or diameters may be used provided that each bar, is designed for a maximum applied load of 8,000 lb. If the bar diameter is changed, plate and deck holes must be modified accordingly.
5. Curb and rail splices shall be located so that curb and rail members are continuous over not less than 2 posts. Curb splices shall be located a minimum of 1.5 post spacings away from rail splices. It is recommended that glulam rails be continuous over the bridge length.

MATERIALS

6. Sawn lumber and glued laminated timber shall comply with the requirements of AASHTO M168 and shall be pressure treated with wood preservative in accordance with AASHTO M133.
7. The bridge rail shall be horizontally laminated glued laminated timber; visually graded Western Species Combination No. 2 or visually graded Southern Pine Combination No. 48. Other species and grades of glued laminated timber may be used provided that the minimum tabulated values are not less than the following:
   F_{bw} = 1,800 lb/in^2 E = 1,800,000 lb/in^2
8. Posts, curbs, scuppers, and spacer blocks may be sawn lumber or glued laminated timber. When sawn lumber is used, material shall be visually graded No. 1 Southern Pine or visually graded No. 1 Douglas Fir-Larch. Glued laminated timber and other species and grades of sawn lumber may be used provided that the minimum tabulated values are not less than the following:
   F_b = 1,350 lb/in^2 E = 1,500,000 lb/in^2
9. Steel plates and shapes shall comply with the requirements of ASTM A36.
10. Bolts shall comply with the requirements ASTM A307, Grade 2 and should preferably be dome head timber bolts. Bolts on traffic face of rail shall be dome head.
11. Split rings shall be manufactured from SAE 1010 hot rolled carbon steel. Shear plates shall be malleable iron manufactured according to ASTM A47, Grade 32510.
12. All steel components and fasteners shall be galvanized in accordance with AASHTO M111 or AASHTO M232 or shall otherwise be provided with adequate corrosion protection. Galvanizing of high-strength steel bars shall follow the recommendations of the bar manufacturer so as not to adversely affect the mechanical properties of the steel. Galvanize steel components after welding.

FABRICATION AND CONSTRUCTION

13. To the extent possible, all wood shall be cut, drilled, and completely fabricated prior to pressure treatment with preservatives. When field fabrication of wood is required or if wood is damaged, all cuts, bore holes, and damage shall be immediately field treated with wood preservative in accordance with AASHTO M133.
14. Unless noted, malleable iron washers shall be provided under bolt heads and under nuts that are in contact with wood. Washers may be omitted under heads of dome-head timber bolts when the size and strength of the head is sufficient to develop connection strength without wood crushing.
15. The tops of rail posts and the top of the rail splice plate kerf shall be sealed with roofing cement or otherwise protected from direct exposure to weather.

The bridge railings depicted on these drawings were developed and crash tested under a cooperative research agreement between the Midwest Roadside Safety Facility of the University of Nebraska-Lincoln and the USDA Forest Service, Forest Products Laboratory.

University of Nebraska Lincoln

Crash-Tested Bridge Rails for Longitudinal Wood Decks

Glulam Timber Rail with Curb
AASHTO Performance Level 1

September 1995

Sheet 1 of 2

Approach Rail Transition General Configuration

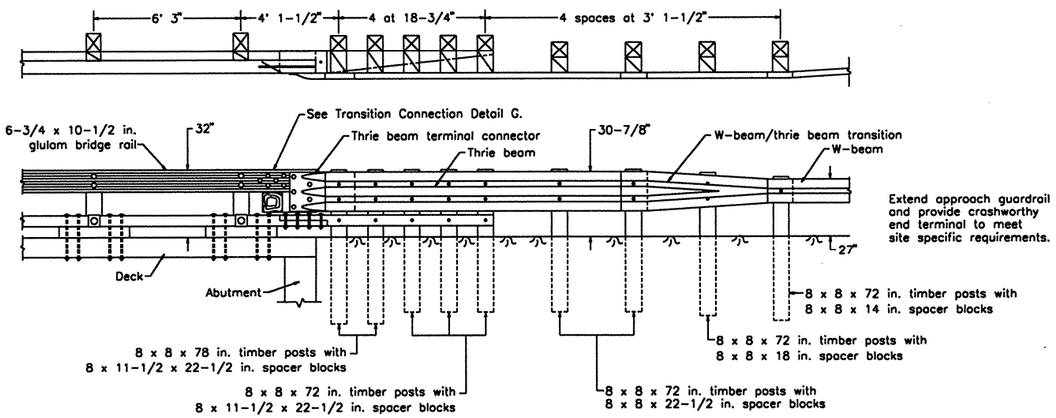

F Transition Block

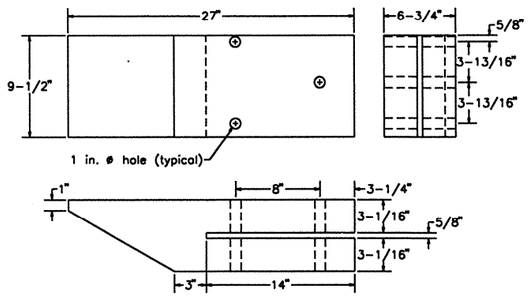

Depth of transition block is based on rail depth of 10-1/2 in. and dressed curb and scupper (both 5-1/2 in. in height). If dimensions of any components increase, depth of transition block must be verified and reduced as necessary.

In addition to the notes on Sheet 1, the following apply to the approach rail transition:

1. The approach rail transition was successfully crash tested to the requirements for Service Level 2 (SL-2), as outlined in NCHRP Report 230.
2. Thrie beam and thrie beam terminal connector shall be 10 gage. W-beam/thrie beam transition and w-beam shall be 12 gage. All shall comply with the requirements of AASHTO M180.
3. W-beam and thrie beam rail splice bolts and post bolts shall comply with AASHTO M180.

G Transition Connection Details

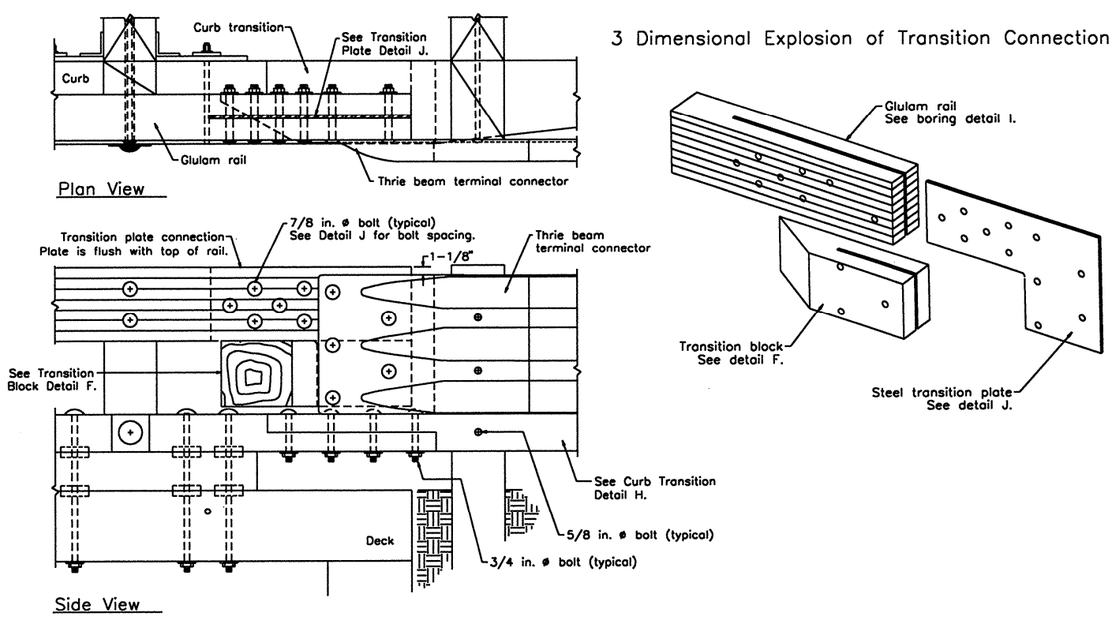

H Curb Transition

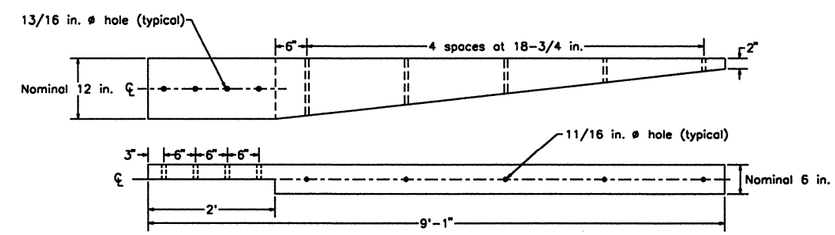

I Transition Glulam Rail Boring Detail

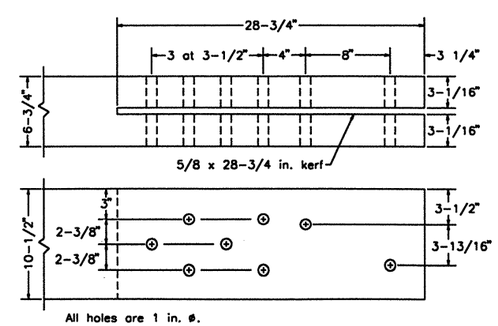

J Steel Transition Plate

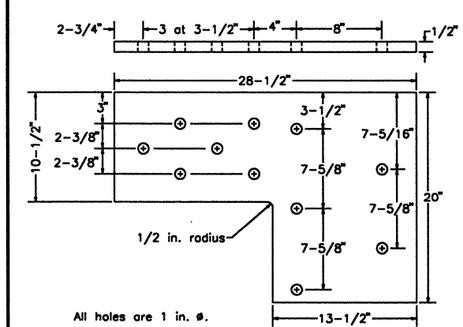

The bridge railings depicted on these drawings were developed and crash tested under a cooperative research agreement between the Midwest Roadside Safety Facility of the University of Nebraska-Lincoln and the USDA Forest Service, Forest Products Laboratory.

University of Nebraska Lincoln

Crash-Tested Bridge Rails for Longitudinal Wood Decks

Glulam Timber Rail with Curb AASHTO Performance Level 1	September 1995	Sheet 2 of 2

General Configuration

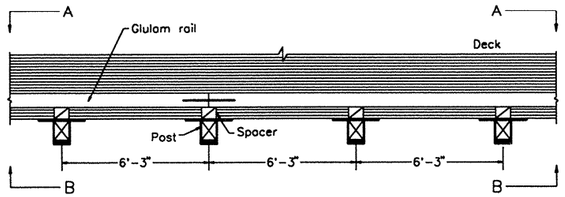

Plan View

Section A–A

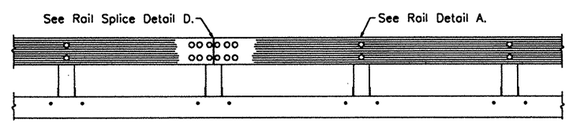

Refer to Sheet 2 for Approach Rail Transition.

Front Elevation

Section B–B

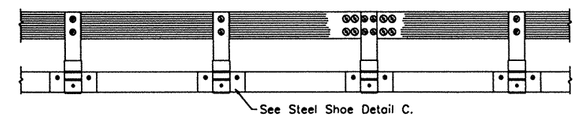

Back Elevation

A Railing Details

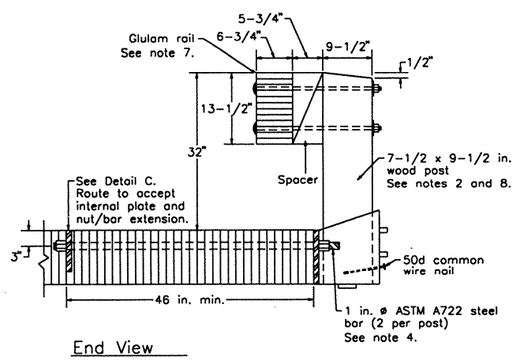

End View

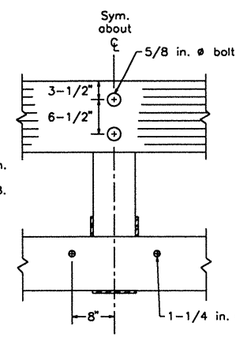

Front View

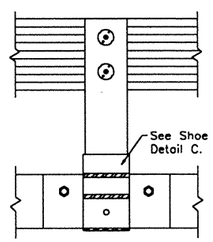

Back View

B Internal Steel Plate

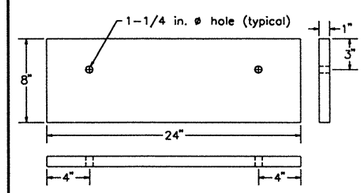

C Steel Shoe Details

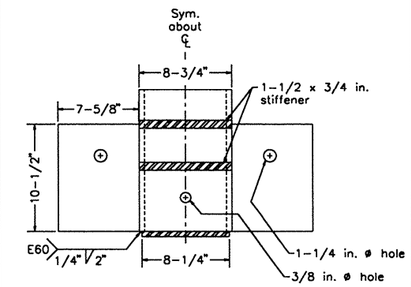

Side View

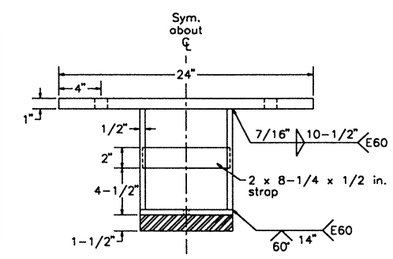

Plan View

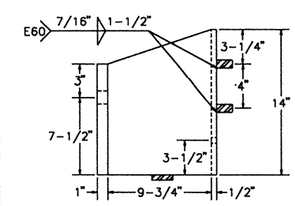

End View

D Rail Splice Details

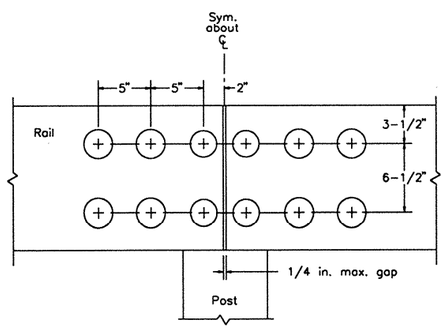

Side View

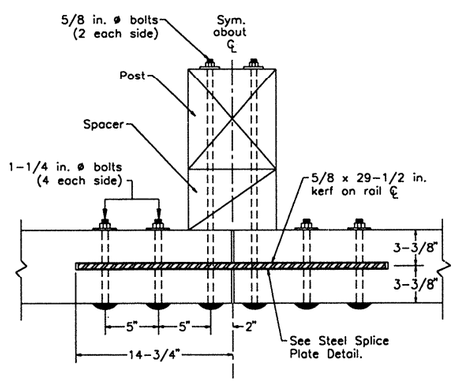

Plan View

Steel Splice Plate

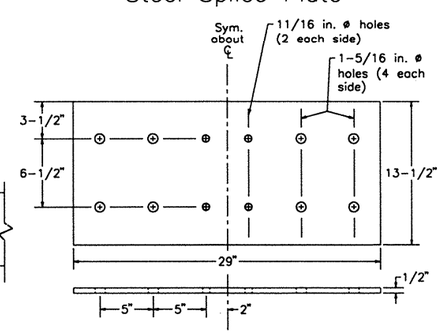

DESIGN

1. This bridge rail was successfully crash tested to the requirements for Performance Level 1 (PL–1), as outlined in the 1989 AASHTO Guide Specifications for Bridge Railings. It is adaptable to longitudinal stress–laminated, spike–laminated, nail–laminated, and glued laminated timber decks which are 10–1/2 in. or greater in actual thickness.

2. Dimensions for the wood rail, post, and spacer are actual dimensions. Post dimensions correspond to the standard dressed dimensions for a nominal 8 x 10 in. member that is surfaced on 4 sides (S4S).

3. The depth of the glulam timber rail may be increased to a maximum of 13–3/4 in. to allow for standard glulam timber sizes. In such cases, detail dimensions shall be verified and modified accordingly.

4. The steel deck reinforcing bars shown on the drawings are 1 in. diameter ASTM A722 bars. Other bar materials and/or diameters may be used provided that each bar is designed for a maximum applied load of 40,000 lb. If the bar diameter is changed, plate and deck holes must be modified accordingly.

5. Rail splices shall be located so rail members are continuous over not less than 4 posts. It is recommended that the rail be continuous over the bridge length.

MATERIALS

6. Sawn lumber and glued laminated timber shall comply with the requirements of AASHTO M168 and shall be pressure treated with wood preservative in accordance with AASHTO M133.

7. The bridge rail shall be horizontally laminated glued laminated timber; visually graded Western Species Combination No. 2 or visually graded Southern Pine Combination No. 48. Other species and grades of glued laminated timber may be used provided that the minimum tabulated values are not less than the following:
   F_{bw} = 1,800 lb/in^2
   E = 1,800,000 lb/in^2

8. Posts and spacer blocks may be sawn lumber or glued laminated timber. When sawn lumber is used, material shall be visually graded No. 1 Southern Pine or visually graded No. 1 Douglas Fir–Larch. Glued laminated timber and other species and grades of sawn lumber may be used provided that the minimum tabulated values are not less than the following:
   F_b = 1,350 lb/in^2
   E = 1,500,000 lb/in^2

9. Steel plates and shapes shall comply with the requirements of ASTM A36.

10. Bolts shall comply with the requirements ASTM A307, Grade 2 and should preferably be dome head timber bolts. Bolts on traffic face of rail shall be dome head.

11. All steel components and fasteners shall be galvanized in accordance with AASHTO M111 or AASHTO M232 or shall otherwise be provided with adequate corrosion protection. Galvanizing of high–strength steel bars shall follow the recommendations of the bar manufacturer so as not to adversely affect the mechanical properties of the steel. Galvanize steel components after welding.

FABRICATION AND CONSTRUCTION

12. Welding shall be completed in accordance with the requirements of the ANSI/AASHTO/AWS D1.5–88 Bridge Welding Code.

13. To the extent possible, all wood shall be cut, drilled, and completely fabricated prior to pressure treatment with preservatives. When field fabrication of wood is required or if wood is damaged, all cuts, bore holes and damage shall be immediately field treated with wood preservative in accordance with AASHTO M133.

14. Unless noted, malleable iron washers shall be provided under bolt heads and under nuts that are in contact with wood. Washers may be omitted under heads of dome–head timber bolts when the size and strength of the head is sufficient to develop connection strength without wood crushing.

15. The tops of rail posts and the top of the rail splice plate kerf shall be sealed with roofing cement or otherwise protected from direct exposure to weather.

The bridge railings depicted on these drawings were developed and crash tested under a cooperative research agreement between the Midwest Roadside Safety Facility of the University of Nebraska-Lincoln and the USDA Forest Service, Forest Products Laboratory.

University of Nebraska Lincoln

Crash-Tested Bridge Rails for Longitudinal Wood Decks

Glulam Timber Rail without Curb AASHTO Performance Level 1	September 1995	Sheet 1 of 2

Approach Rail Transition General Configuration

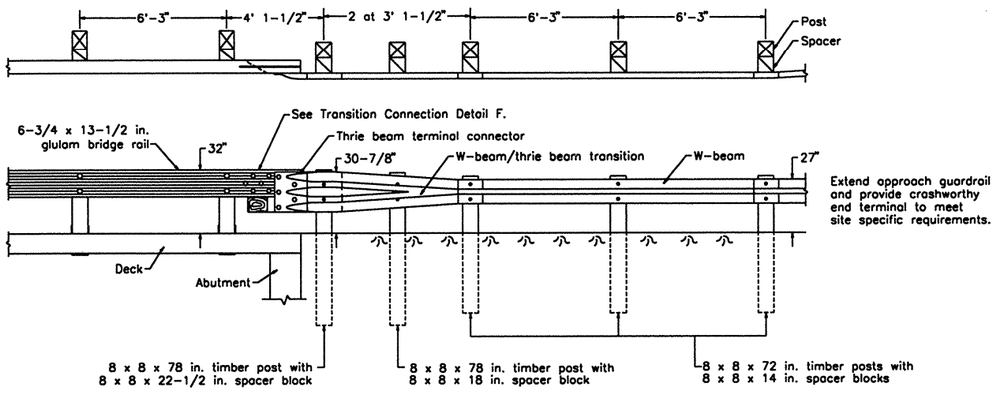

E Steel Transition Plate

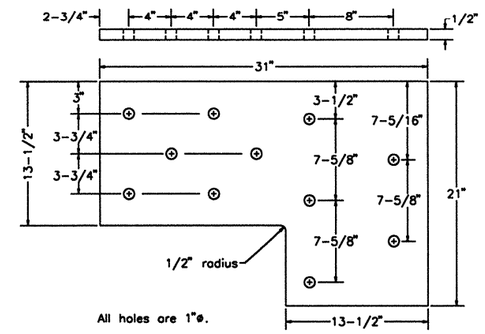

In addition to the notes on Sheet 1, the following apply to the approach rail transition:

1. The approach rail transition was successfully crash tested to the requirements for Service Level 1 (SL-1), as outlined in NCHRP Report 230.
2. Thrie beam terminal connector shall be 10 gage. W-beam/thrie beam transition and w-beam shall be 12 gage. All shall comply with the requirements AASHTO M180.
3. W-beam and thrie beam rail splice bolts and post bolts shall comply with AASHTO M180.

F Transition Connection Details

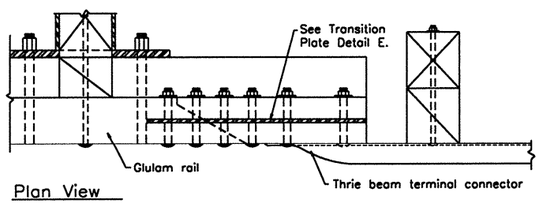

Plan View

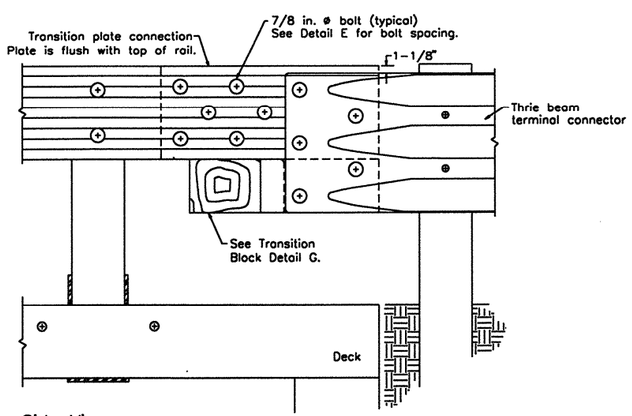

Side View

3 Dimensional Explosion of Transition Connection

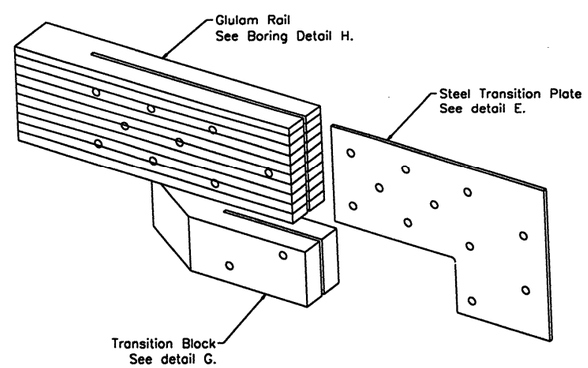

G Transition Block

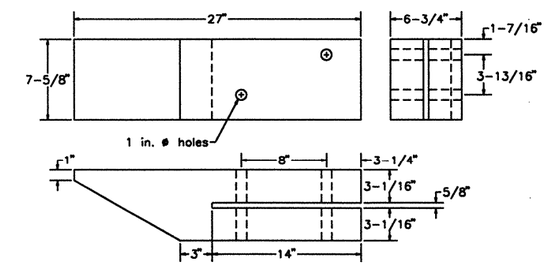

H Transition Glulam Rail Boring Detail

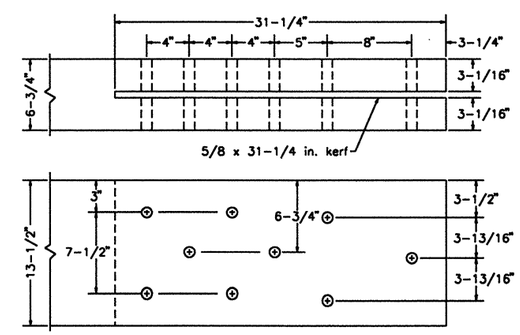

The bridge railings depicted on these drawings were developed and crash tested under a cooperative research agreement between the Midwest Roadside Safety Facility of the University of Nebraska-Lincoln and the USDA Forest Service, Forest Products Laboratory.

University of Nebraska Lincoln

Crash-Tested Bridge Rails for Longitudinal Wood Decks

Glulam Timber Rail without Curb AASHTO Performance Level 1	September 1995	Sheet 2 of 2

General Configuration

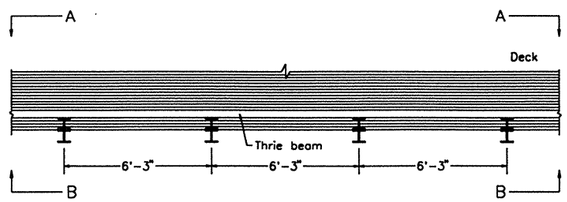

Plan View

Section A–A

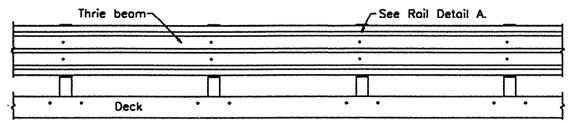

Refer to Sheet 2 for Approach Rail Transition.

Front Elevation

Section B–B

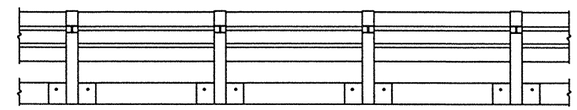

Back Elevation

A Railing Details

For stress–laminated decks, omit internal plate and ASTM A722 steel bars.

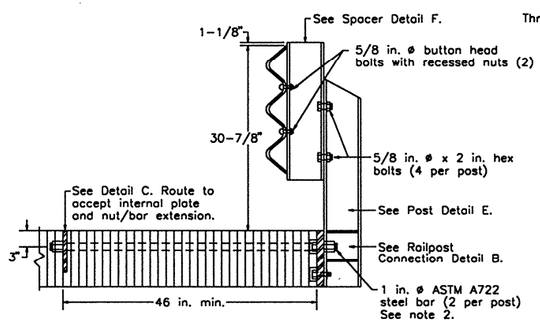

End View

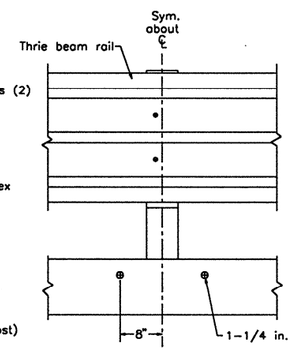

Front View

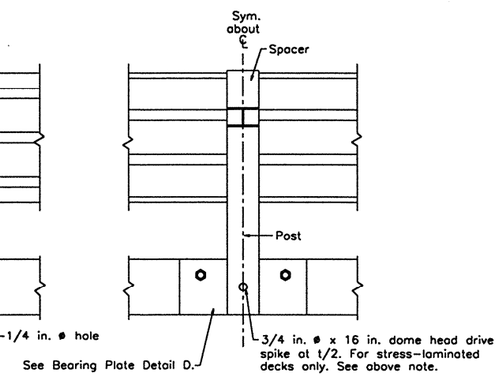

Back View

B Rail Post Connection

Note: 1 in. ø steel bars omitted for clarity.

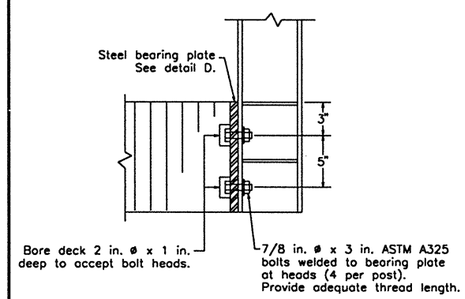

End View

C Internal Steel Plate

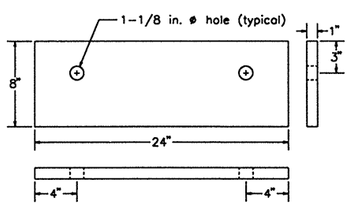

D Steel Bearing Plate

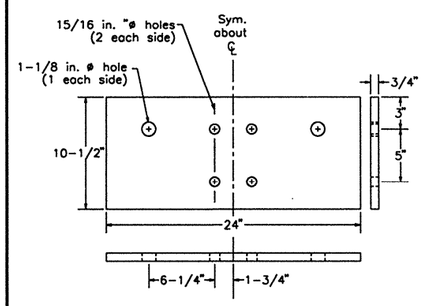

E W6 x 15 Steel Post

Holes in long flange only.

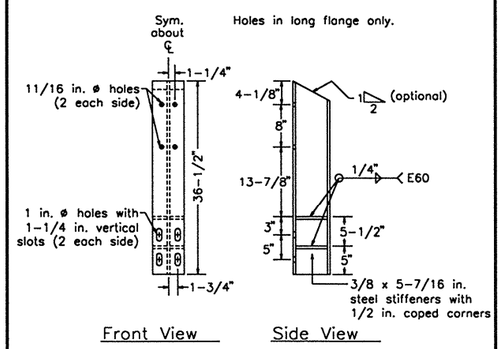

Front View Side View

F W6 x 15 Steel Spacer

All holes are 11/16 in. ø.

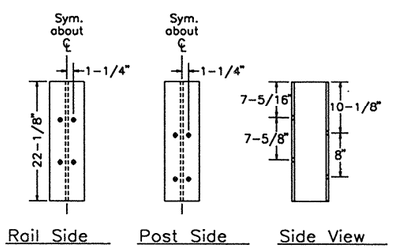

Rail Side Post Side Side View

DESIGN

1. This bridge rail was successfully crash tested to the requirements for Performance Level 1 (PL–1), as outlined in the 1989 AASHTO Guide Specifications for Bridge Railings. It is adaptable to longitudinal stress–laminated, spike–laminated, nail–laminated, and glued laminated timber decks which are 10–1/2 in. or greater in actual thickness.
2. The steel deck reinforcing bars shown on the drawings are 1 in. diameter ASTM A722 bars. Other bar materials and/or diameters may be used provided that each bar is designed for a maximum applied load of 44,000 lb. If the bar diameter is changed, plate and deck holes must be modified accordingly.

MATERIALS

3. The bridge rail shall be 10 gage thrie beam. Unless noted, all rail, rail splice and post bolts shall comply with the requirements of AASHTO M180.
4. Steel plates and shapes shall comply with the requirements of ASTM A36.
5. All steel components and fasteners shall be galvanized in accordance with AASHTO M111 or AASHTO M232 or shall otherwise be provided with adequate corrosion protection. Galvanizing of high–strength steel bars shall follow the recommendations of the bar manufacturer so as not to adversely affect the mechanical properties of the steel. Galvanize steel components after welding.

FABRICATION AND CONSTRUCTION

6. Welding shall be completed in accordance with the requirements of the ANSI/AASHTO/AWS D1.5–88 Bridge Welding Code.
7. To the extent possible, all wood shall be cut, drilled, and completely fabricated prior to pressure treatment with preservatives. When field fabrication of wood is required or if wood is damaged, all cuts, bore holes and damage shall be immediately field treated with wood preservative in accordance with AASHTO M133.
8. Washers shall be provided under hex bolt nuts.

The bridge railings depicted on these drawings were developed and crash tested under a cooperative research agreement between the Midwest Roadside Safety Facility of the University of Nebraska-Lincoln and the USDA Forest Service, Forest Products Laboratory.

University of Nebraska Lincoln

Crash-Tested Bridge Rails for Longitudinal Wood Decks

Steel Rail AASHTO Performance Level 1	September 1995	Sheet 1 of 2

Approach Rail Transition General Configuration

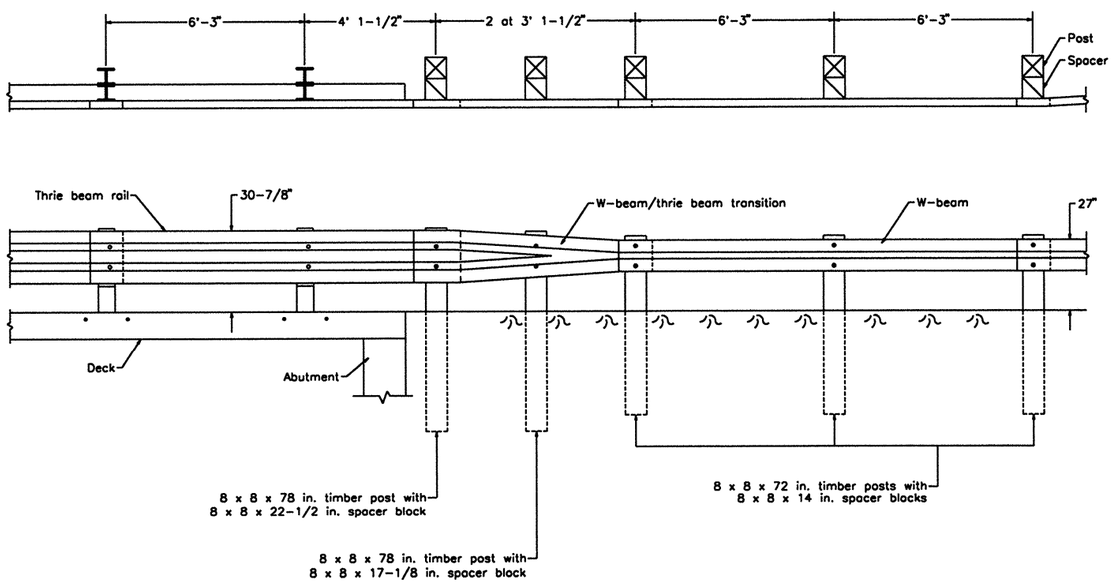

Extend approach guardrail and provide crashworthy end terminal to meet site specific requirements.

In addition to the notes on Sheet 1, the following apply to the approach rail transition:

1. The approach rail transition was successfully crash tested to the requirements for Service Level 1 (SL-1), as outlined in NCHRP Report 230.
2. Thrie beam and thrie beam terminal connector shall be 10 gage. W-beam/thrie beam transition and w-beam shall be 12 gage. All shall comply with the requirements of AASHTO M180.
3. W-beam and thrie beam rail splice bolts and post bolts shall comply with AASHTO M180.

The bridge railings depicted on these drawings were developed and crash tested under a cooperative research agreement between the Midwest Roadside Safety Facility of the University of Nebraska-Lincoln and the USDA Forest Service, Forest Products Laboratory.

University of Nebraska Lincoln

Crash-Tested Bridge Rails for Longitudinal Wood Decks

Steel Rail
AASHTO Performance Level 1

September 1995

Sheet 2 of 2

General Configuration

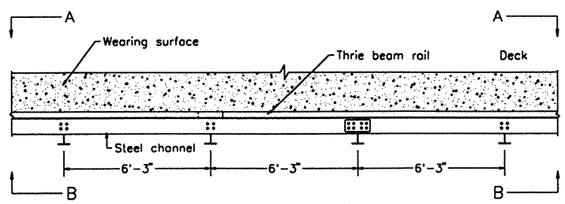

Plan

Section A–A

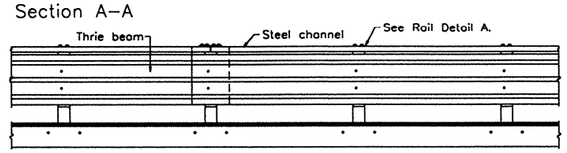

Refer to Sheets 3 and 4 for Approach Rail Transition.

Front Elevation

Section B–B

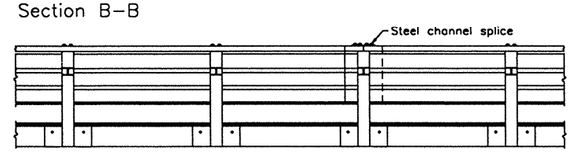

Back Elevation

A Railing Details

For stress–laminated decks, omit internal plate and ASTM A722 steel bars.

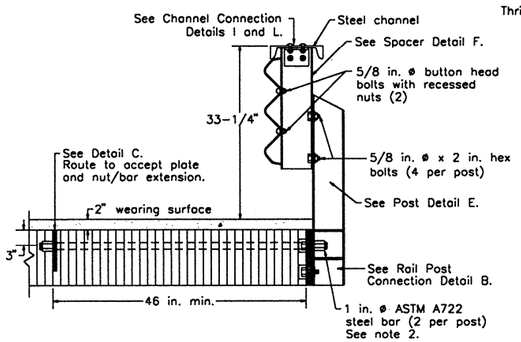

End View

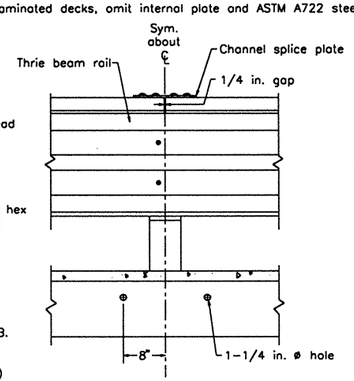

Front View

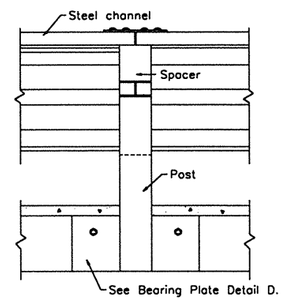

Back View

B Rail Post Connection Detail

Note: 1 in. ø steel bars omitted for clarity.

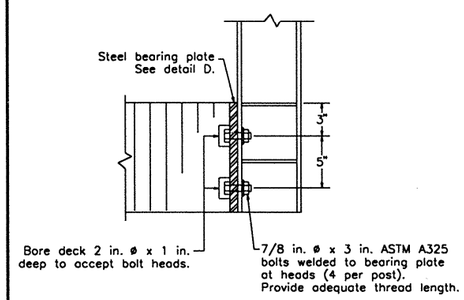

End View

C Internal Steel Plate

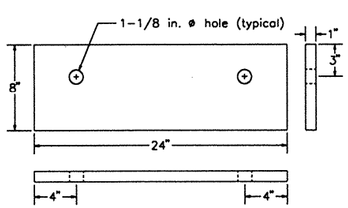

D Steel Bearing Plate

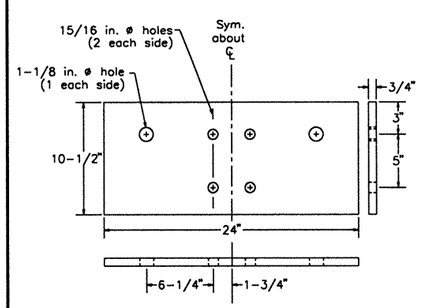

E W6 x 15 Post

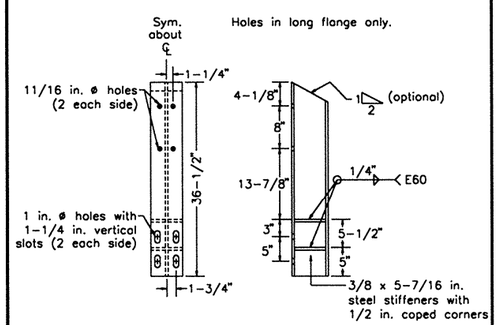

Front View

Side View

F W6 x 15 Spacer

All holes are 11/16 in. ø.

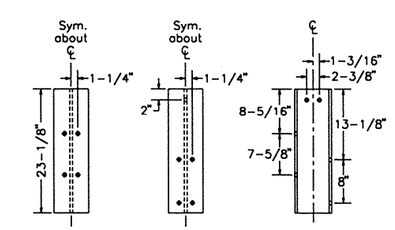

Rail Side

Post Side

Side View

DESIGN

1. This bridge rail was successfully crash tested to the requirements for Performance Level 2 (PL–2), as outlined in the 1989 AASHTO Guide Specifications for Bridge Railings. It is adaptable to longitudinal stress–laminated, spike–laminated, nail–laminated, and glued laminated timber decks which are 10–1/2 in. or greater in actual thickness.

2. Steel deck reinforcing bars shall be 1 in. diameter ASTM A722 bars.

MATERIALS

3. The bridge rail shall be 10 gage thrie beam. Unless noted, all rail, rail splice and post bolts shall comply with the requirements of AASHTO M180.

4. Steel plates and shapes shall comply with the requirements of ASTM A36.

5. All steel components and fasteners shall be galvanized in accordance with AASHTO M111 or AASHTO M232 or shall otherwise be provided with adequate corrosion protection. Galvanizing of high–strength steel bars shall follow the recommendations of the bar manufacturer so as not to adversely affect the mechanical properties of the steel. Galvanize steel components after welding.

FABRICATION AND CONSTRUCTION

6. Welding shall be completed in accordance with the requirements of the ANSI/AASHTO/AWS D1.5–88 Bridge Welding Code.

7. To the extent possible, all wood shall be cut, drilled, and completely fabricated prior to pressure treatment with preservatives. When field fabrication of wood is required or if wood is damaged, all cuts, bore holes and damage shall be immediately field treated with wood preservative in accordance with AASHTO M133.

8. Washers shall be used in combination with hex head nuts.

The bridge railings depicted on these drawings were developed and crash tested under a cooperative research agreement between the Midwest Roadside Safety Facility of the University of Nebraska-Lincoln, the USDA Forest Service, Forest Products Laboratory and the Federal Highway Administration.

University of Nebraska Lincoln

Crash-Tested Bridge Rails for Longitudinal Wood Decks

Steel Rail AASHTO Performance Level 2	September 1995	Sheet 1 of 4

G Steel Channel Details

Type A: Interior Segments C8 x 11-1/2 channel; All holes are 3/4 in. ø with 1-1/16 in. slots.

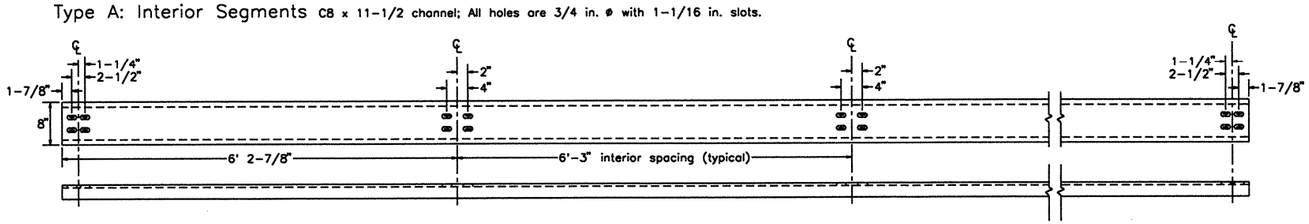

Type B: Exterior Segments at Bridge Ends C8 x 11-1/2 channel; All holes are 3/4 in. ø with 1-1/16 in. slots.

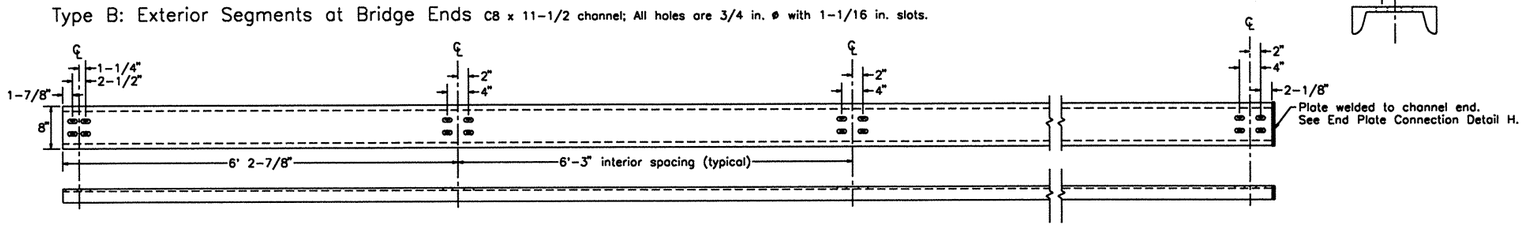

Channel Cross Section

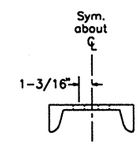

H End Plate Connection Detail

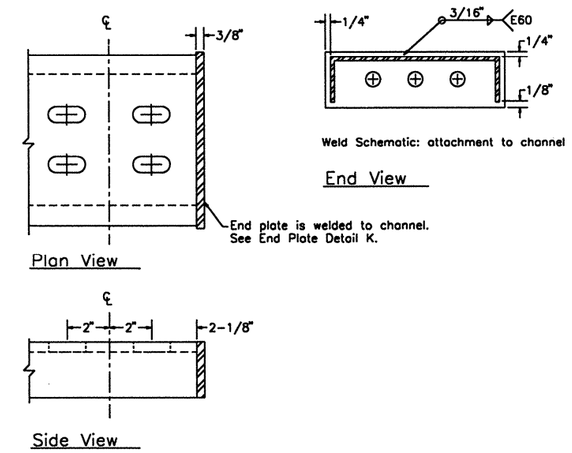

I Channel Connection Details

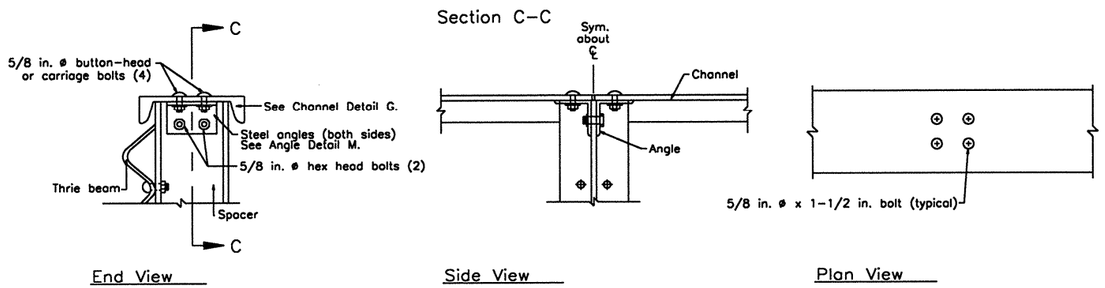

J Steel Splice Plate

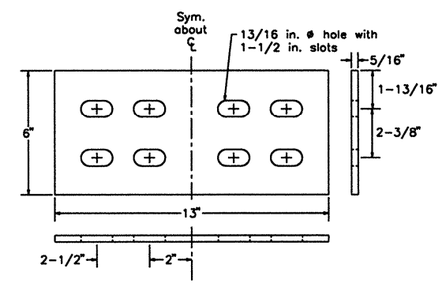

K Steel End Plate

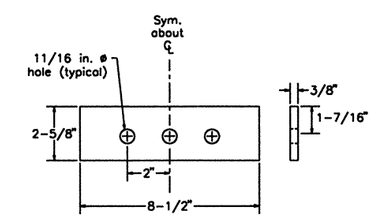

L Channel Splice Connection Details

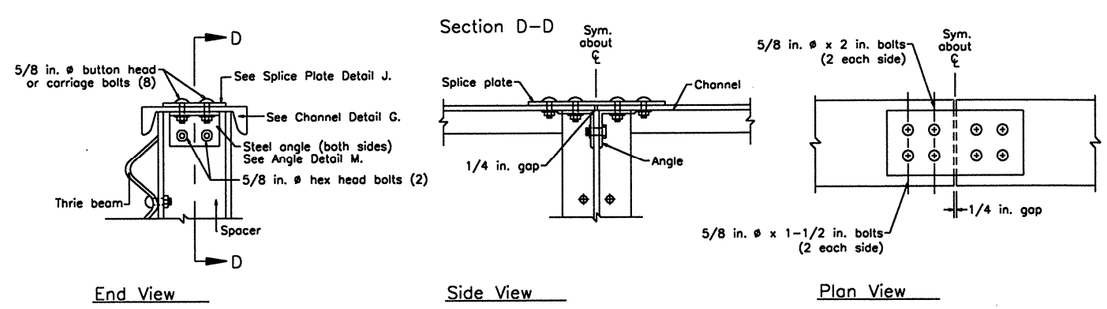

M Steel Angle

3-1/2 x 3-1/2 x 5/16 in. angle

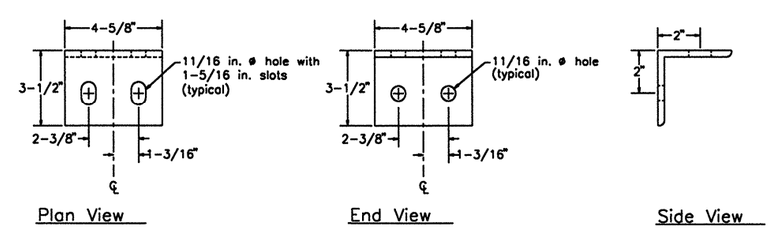

The bridge railings depicted on these drawings were developed and crash tested under a cooperative research agreement between the Midwest Roadside Safety Facility of the University of Nebraska-Lincoln, the USDA Forest Service, Forest Products Laboratory and the Federal Highway Administration.

University of Nebraska Lincoln

Crash-Tested Bridge Rails for Longitudinal Wood Decks

Steel Rail AASHTO Performance Level 2	September 1995	Sheet 2 of 4

Approach Rail Transition General Configuration

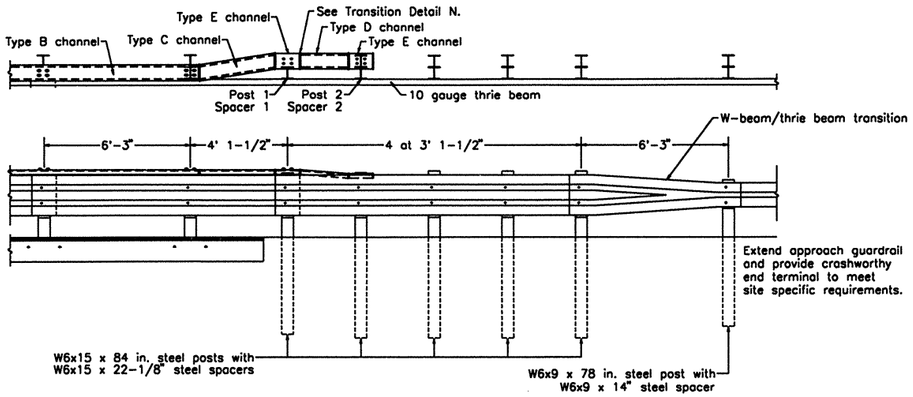

O W6 x 15 Spacer 1

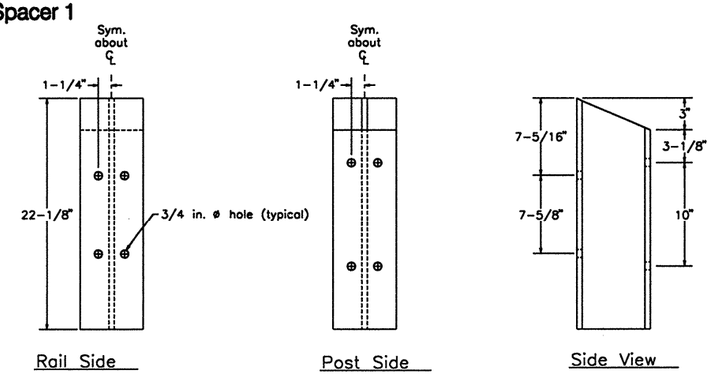

P W6 x 15 Spacer 2

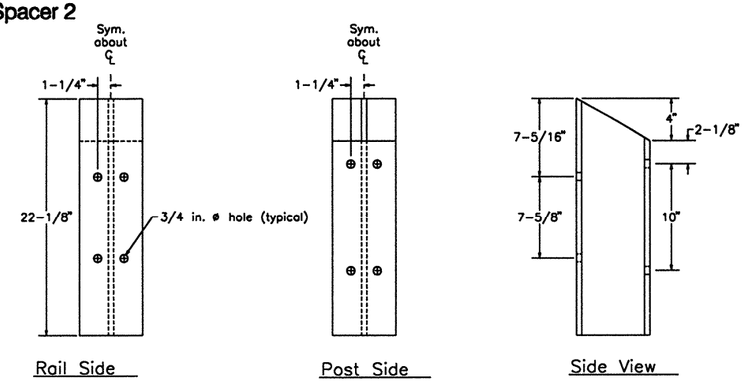

N Transition Detail

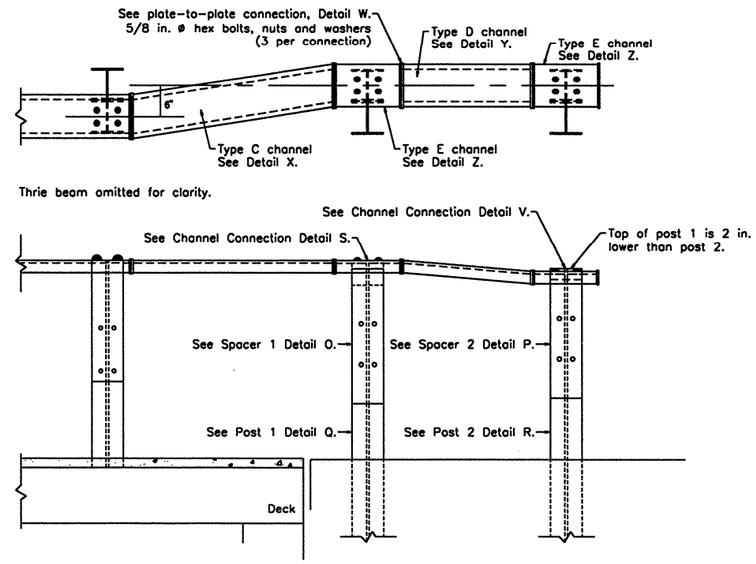

Q W6 x 15 Post 1

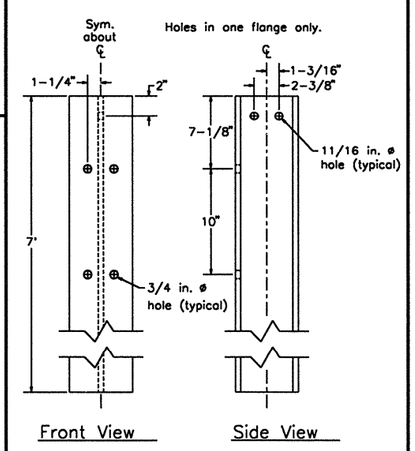

R W6 x 15 Post 2

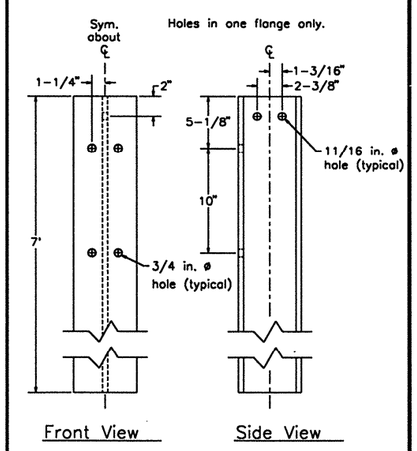

In addition to the notes on Sheet 1, the following apply to the approach rail transition:

1. The approach rail transition was successfully crash tested to the requirements for Service Level 1 (SL-1), as outlined in NCHRP Report 230.
2. Thrie beam and thrie beam terminal connector shall be 10 gage. W-beam/thrie beam transition and w-beam shall be 12 gage. All shall comply with the requirements of AASHTO M180.
3. W-beam and thrie beam rail splice bolts and post bolts shall comply with AASHTO M180.

The bridge railings depicted on these drawings were developed and crash tested under a cooperative research agreement between the Midwest Roadside Safety Facility of the University of Nebraska-Lincoln, the USDA Forest Service, Forest Products Laboratory and the Federal Highway Administration.

University of Nebraska Lincoln

Crash-Tested Bridge Rails for Longitudinal Wood Decks

Steel Rail AASHTO Performance Level 2	September 1995	Sheet 3 of 4

S Channel Connection at Post 1

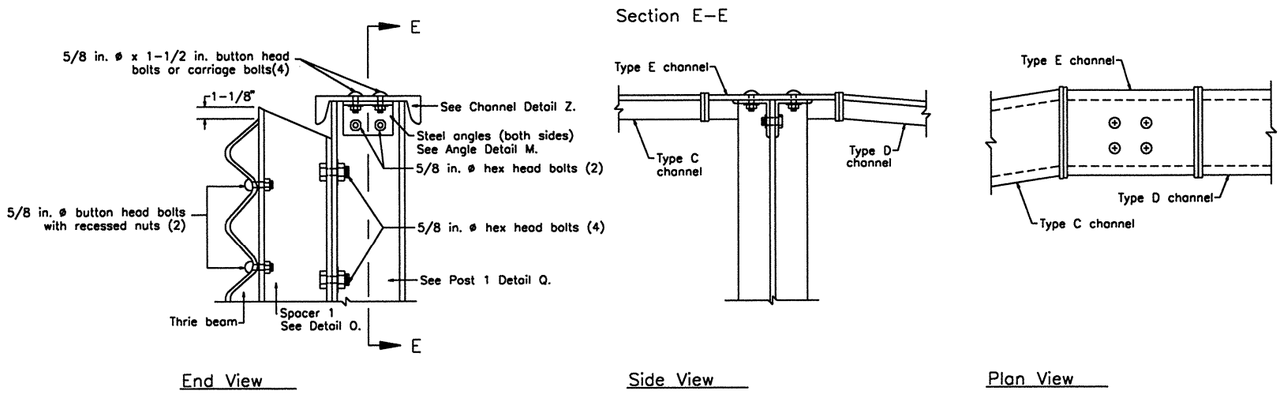

T 8-1/2 in. Steel End Plate

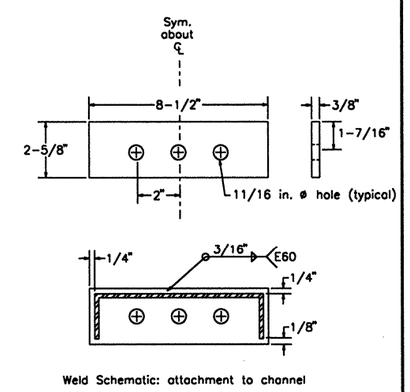

Weld Schematic: attachment to channel

U 8-5/8 in. Steel End Plate

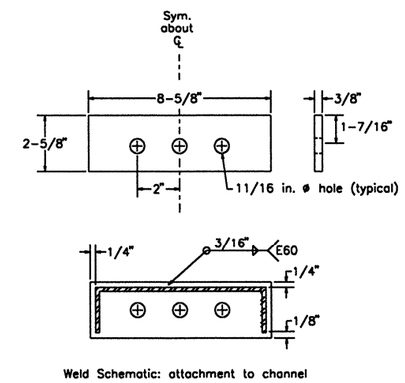

Weld Schematic: attachment to channel

V Channel Connection at Post 2

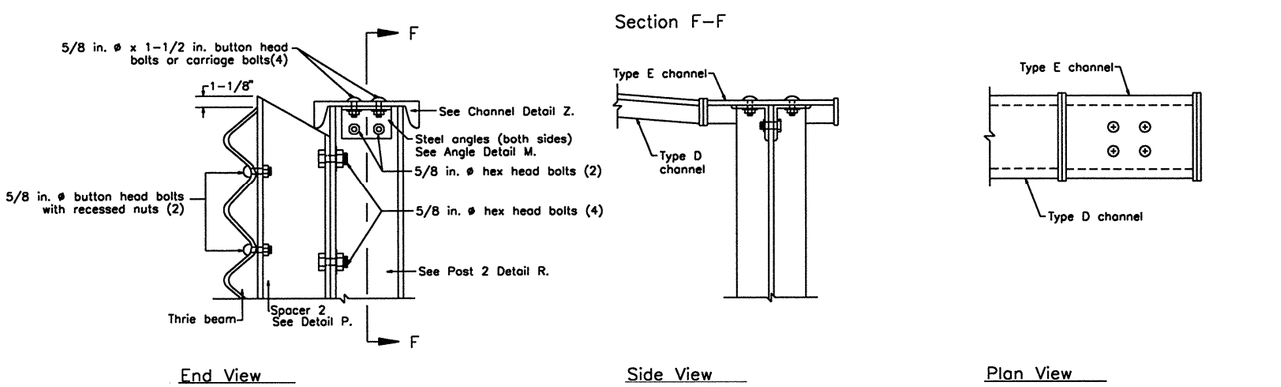

W Plate Connection Details

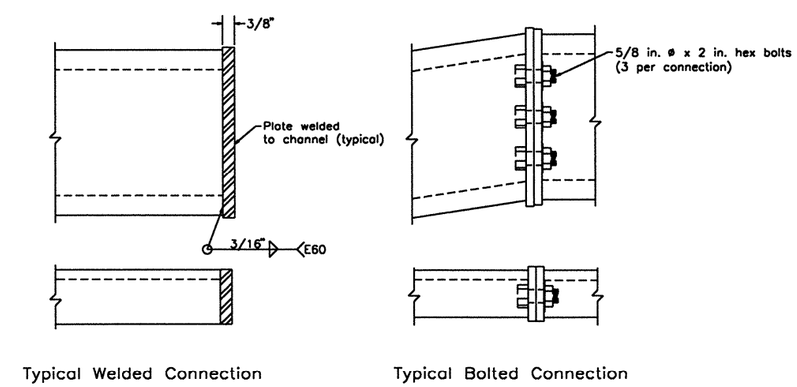

X Type C - C8 x 11-1/2 in. Steel Channel

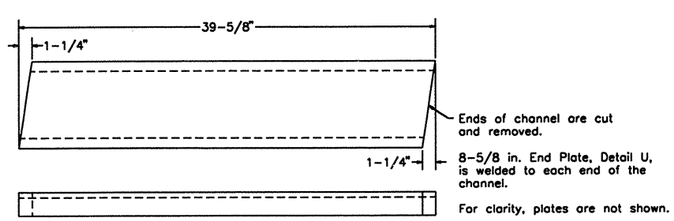

Y Type D - C8 x 11-1/2 in. Steel Channel

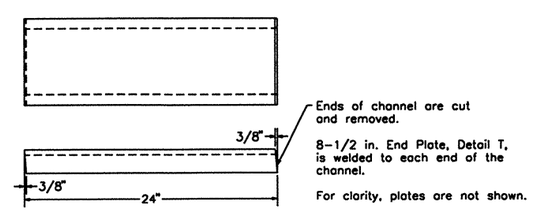

Z Type E - C8 x 11-1/2 in. Steel Channel

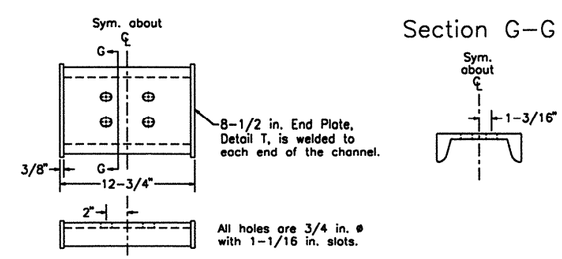

The bridge railings depicted on these drawings were developed and crash tested under a cooperative research agreement between the Midwest Roadside Safety Facility of the University of Nebraska-Lincoln, the USDA Forest Service, Forest Products Laboratory and the Federal Highway Administration.

University of Nebraska Lincoln

Crash-Tested Bridge Rails for Longitudinal Wood Decks

Steel Rail AASHTO Performance Level 2	September 1995	Sheet 4 of 4

General Configuration

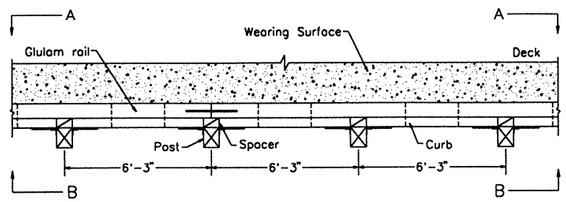

Plan

Section A–A

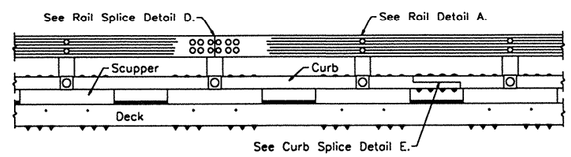

Front Elevation

Section B–B

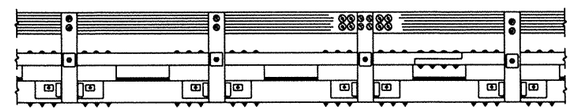

Refer to Sheet 2 for Approach Rail Transition.

Back Elevation

A Railing Details

For stress–laminated decks, omit internal plate, post plates, and ASTM A722 steel bars.

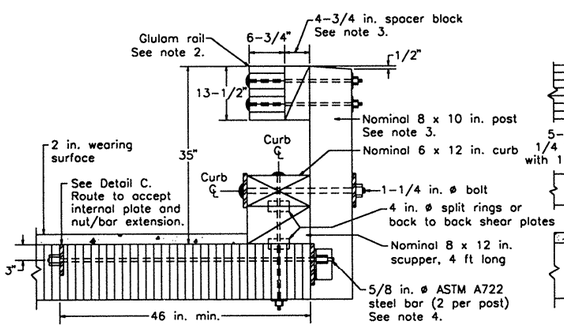

End View

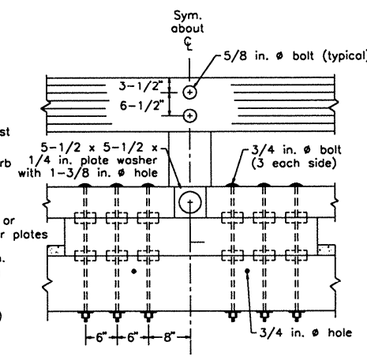

Front View

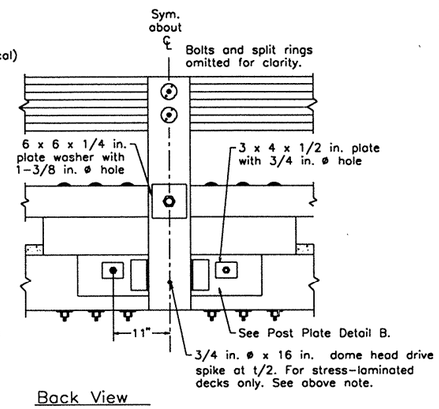

Back View

B Steel Post Plate

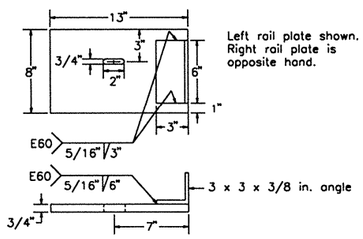

Left rail plate shown. Right rail plate is opposite hand.

C Internal Steel Plate

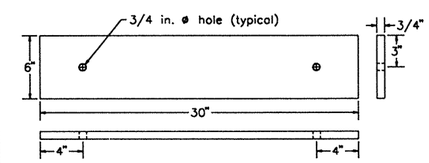

D Rail Splice Details

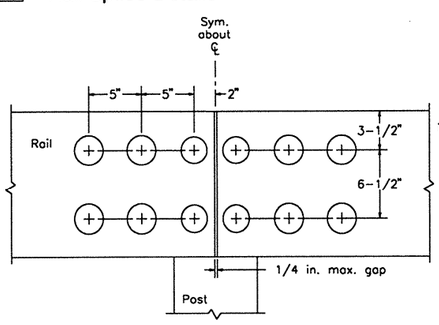

Front View

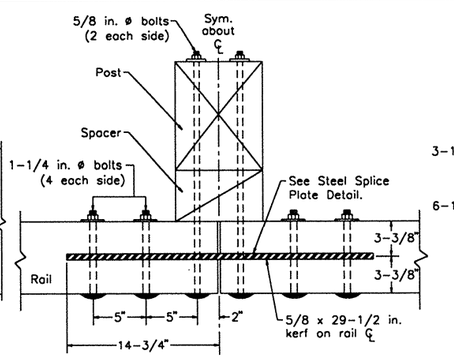

Plan View

Steel Splice Plate

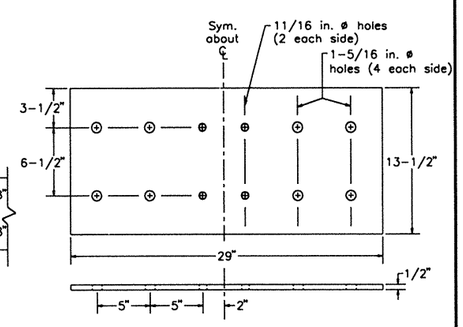

E Curb Splice Detail

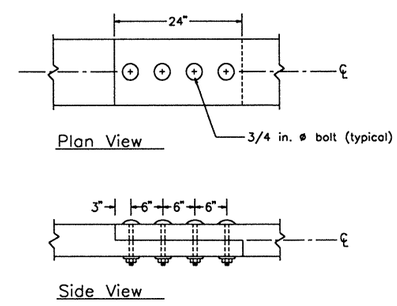

Plan View

Side View

DESIGN

1. This bridge rail was successfully crash tested to the requirements for Test Level 4 (TL–4), as outlined in NCHRP Report 350. In addition, the rail meets crash test requirements for Performance Level 2 (PL–2), as outlined in the 1989 AASHTO Guide Specifications for Bridge Railings. It is adaptable to longitudinal stress–laminated, spike–laminated, nail–laminated, and glued laminated timber decks which are 10–1/2 in. or greater in actual thickness.

2. Dimensions given for glued laminated timber rails are actual dimensions. The depth of the glulam timber rail may be increased to a maximum of 13–3/4 in. to allow for other standard glulam timber sizes. In such cases detail dimensions shall be verified and modified accordingly.

3. Dimensions for wood posts, curbs, and scuppers are given as nominal dimensions. Actual dimensions may be a maximum of 1/2 in. less than the stated nominal dimensions depending on material surfacing. Dimensions for spacer block depth are actual dimensions.

4. Steel deck reinforcing bars shall be 5/8 in. diameter ASTM A722 bars.

5. Curb and rail splices shall be located so that curb and rail members are continuous over not less than 2 posts. Curb splices shall be located a minimum of 1.5 post spacings away from rail splices. It is recommended that glulam rails be continuous over the bridge length.

MATERIALS

6. Sawn lumber and glued laminated timber shall comply with the requirements of AASHTO M168 and shall be pressure treated with wood preservative in accordance with AASHTO M133.

7. The bridge rail shall be horizontally laminated glued laminated timber; visually graded Western Species Combination No. 2 or visually graded Southern Pine Combination No. 48. Other species and grades of glued laminated timber may be used provided that the minimum tabulated values are not less than the following:
   F_{by} = 1,800 lb/in² E = 1,800,000 lb/in²

8. Posts, curbs, scuppers, and spacer blocks may be sawn lumber or glued laminated timber. When sawn lumber is used, material shall be visually graded No. 1 Southern Pine or visually graded No. 1 Douglas Fir–Larch. Glued laminated timber and other species and grades of sawn lumber may be used provided that the minimum tabulated values are not less than the following:
   F_b = 1,350 lb/in² E = 1,500,000 lb/in²

9. Steel plates and shapes shall comply with the requirements of ASTM A36.

10. Bolts shall comply with the requirements ASTM A307, Grade 2 and should preferably be dome head timber bolts. Bolts on traffic face of rail shall be dome head.

11. Split rings shall be manufactured from SAE 1010 hot rolled carbon steel. Shear plates shall be malleable iron manufactured according to ASTM A47, Grade 32510.

12. All steel components and fasteners shall be galvanized in accordance with AASHTO M111 or AASHTO M232 or shall otherwise be provided with adequate corrosion protection. Galvanizing of high–strength steel bars shall follow the recommendations of the bar manufacturer so as not to adversely affect the mechanical properties of the steel. Galvanize steel components after welding.

FABRICATION AND CONSTRUCTION

13. To the extent possible, all wood shall be cut, drilled, and completely fabricated prior to pressure treatment with preservatives. When field fabrication of wood is required or if wood is damaged, all cuts, bore holes, and damage shall be immediately field treated with wood preservative in accordance with AASHTO M133.

14. Unless noted, malleable iron washers shall be provided under bolt heads and under nuts that are in contact with wood. Washers may be omitted under heads of dome–head timber bolts when the size and strength of the head is sufficient to develop connection strength without wood crushing.

15. The tops of rail posts and the top of the rail splice plate kerf shall be sealed with roofing cement or otherwise protected from direct exposure to weather.

The bridge railings depicted on these drawings were developed and crash tested under a cooperative research agreement between the Midwest Roadside Safety Facility of the University of Nebraska-Lincoln, the USDA Forest Service, Forest Products Laboratory and the Federal Highway Administration.

University of Nebraska Lincoln

Crash-Tested Bridge Rails for Longitudinal Wood Decks

Glulam Timber Rail with Curb NCHRP 350 Test Level 4	September 1995	Sheet 1 of 2

Approach Rail Transition General Configuration

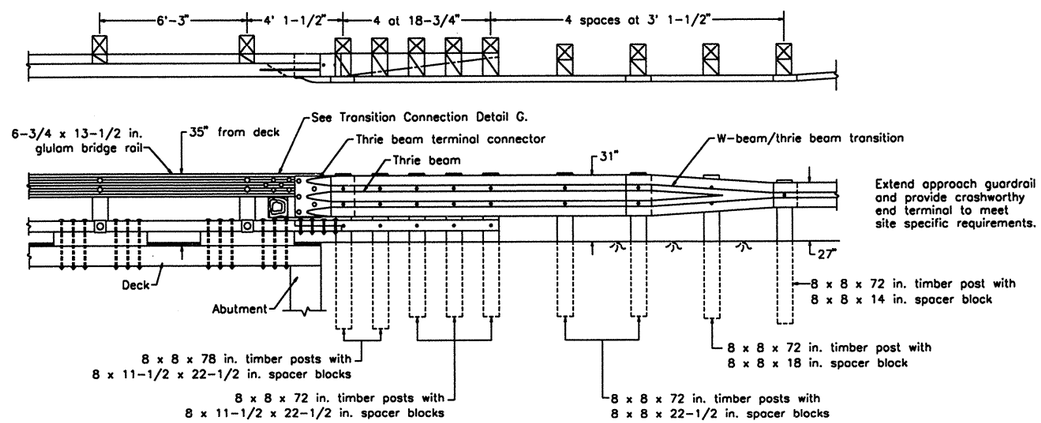

F Curb Transition Block

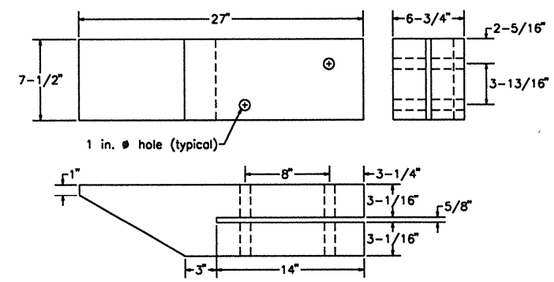

Depth of transition block is based on rail depth of 13-1/2 in. and dressed curb and scupper (5-1/2 and 7-1/2 in. in height, respectively). If dimensions of any components increase, depth of transition block must be verified and reduced as necessary.

In addition to the notes on Sheet 1, the following apply to the approach rail transition:

1. The approach rail transition was successfully crash tested to the requirements for Service Level 2 (SL-2), as outlined in NCHRP Report 230.
2. Thrie beam and thrie beam terminal connector shall be 10 gage. W-beam/thrie beam transition and w-beam shall be 12 gage. All shall comply with the requirements of AASHTO M180.
3. W-beam and thrie beam rail splice bolts and post bolts shall comply with AASHTO M180.

G Transition Connection Details

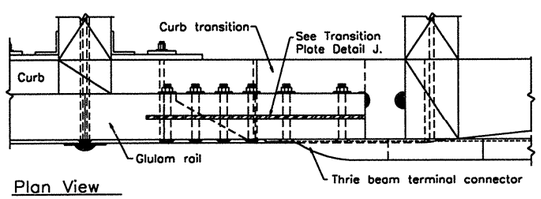

Plan View

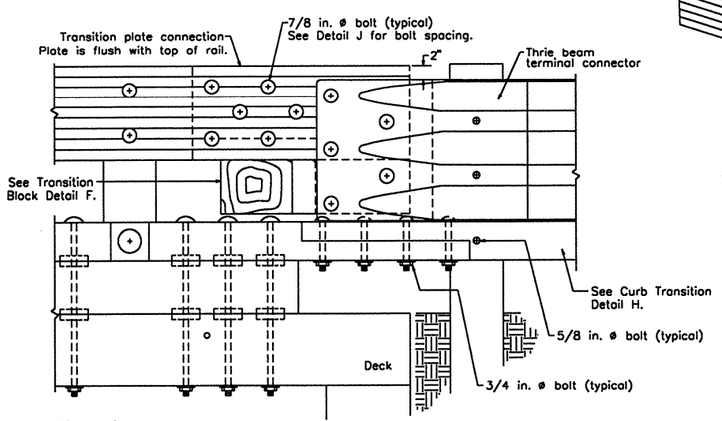

Side View

3 Dimensional Explosion of Transition Connection

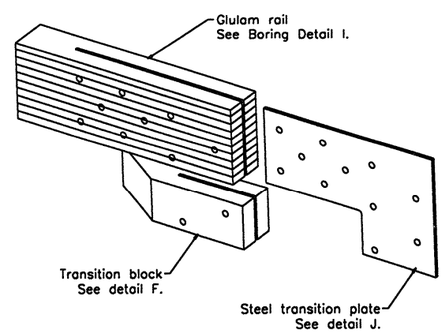

H Curb Transition

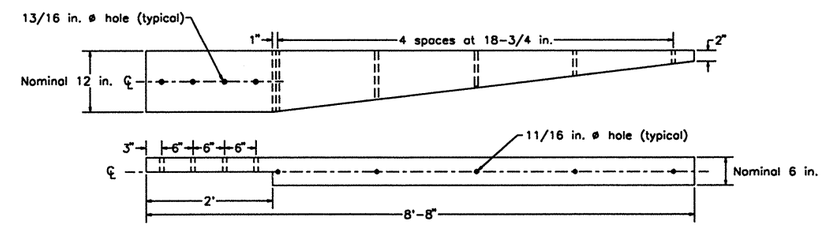

I Transition Glulam Rail Boring Detail

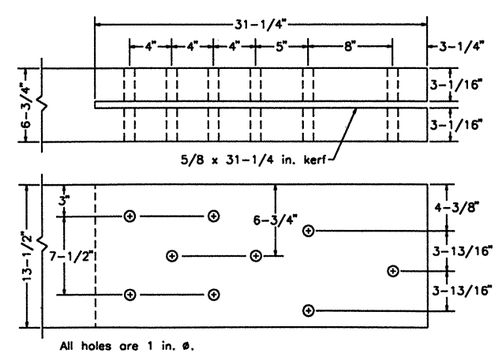

J Transition Plate

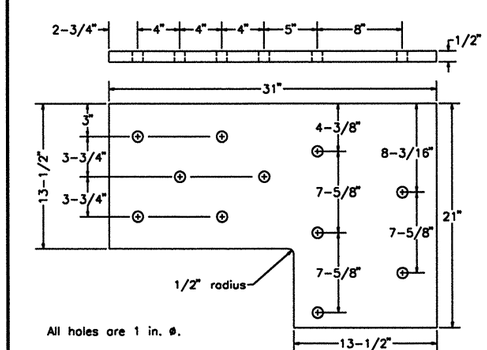

The bridge railings depicted on these drawings were developed and crash tested under a cooperative research agreement between the Midwest Roadside Safety Facility of the University of Nebraska-Lincoln, the USDA Forest Service, Forest Products Laboratory and the Federal Highway Administration.

University of Nebraska Lincoln

Crash-Tested Bridge Rails for Longitudinal Wood Decks

Glulam Timber Rail with Curb NCHRP 350 Test Level 4	September 1995	Sheet 2 of 2

Rail Drawings in S.I. Units

University of
Nebraska
Lincoln

General Configuration

All units are in millimeters based on a soft conversion from customary U.S. units.

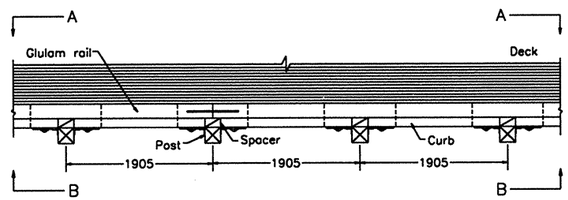

Plan

Section A–A

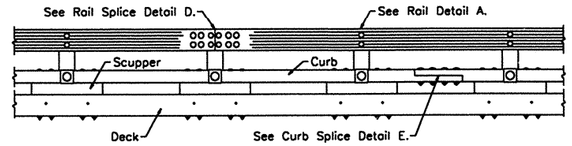

Refer to Sheet 2 for Approach Rail Transition.

Front Elevation

Section B–B

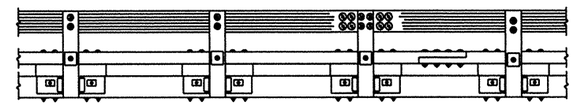

Back Elevation

A Railing Details

For stress-laminated decks, omit internal plate, post plates, and ASTM A722 steel bars.

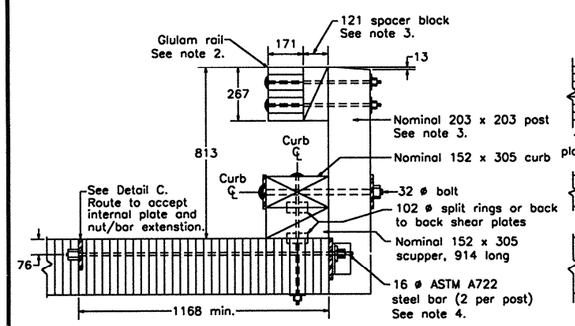

End View

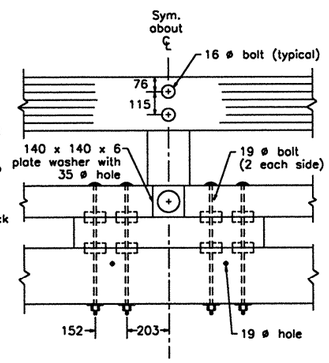

Front View

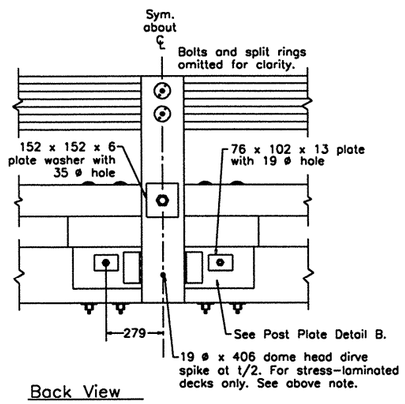

Back View

B Steel Post Plate

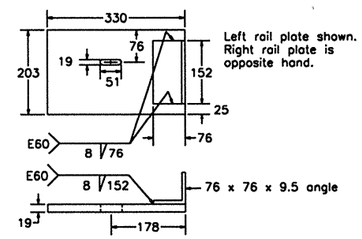

Left rail plate shown.
Right rail plate is
opposite hand.

C Internal Steel Plate

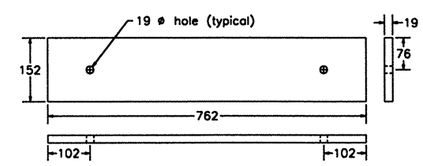

D Rail Splice Details

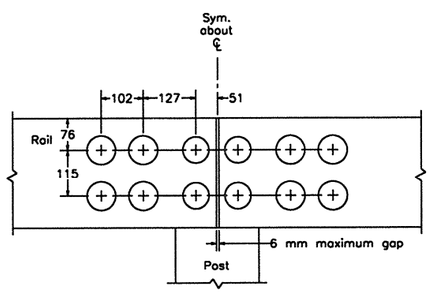

Front View

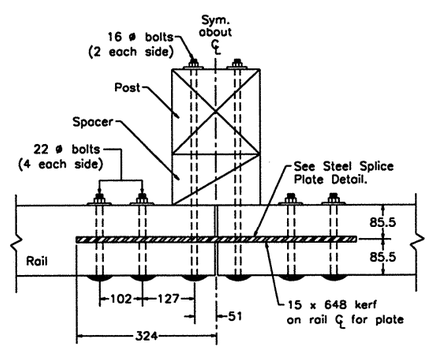

Plan View

Steel Splice Plate

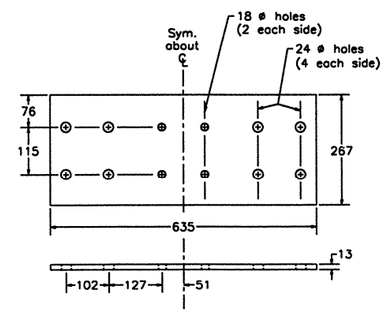

E Curb Splice Detail

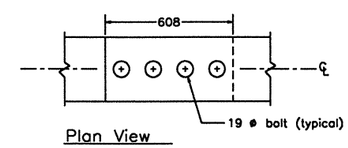

Plan View

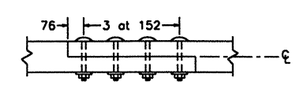

Side View

DESIGN

1. This bridge rail was successfully crash tested to the requirements for Performance Level 1 (PL-1), as outlined in the 1989 AASHTO Guide Specifications for Bridge Railings. It is adaptable to longitudinal stress-laminated, spike-laminated, nail-laminated and glued laminated timber decks which are 203 mm or greater in actual thickness.
2. Dimensions given for glued laminated timber rails are actual dimensions. The depth of the glulam timber rail may be increased to a maximum of 273 mm to allow for other standard glulam sizes. In such cases, detail dimensions shall be modified accordingly.
3. Dimensions for wood posts, curbs, and scuppers are given as nominal dimensions. Actual dimensions may be a maximum of 13 mm less than the stated nominal dimensions depending on material surfacing. Dimensions for spacer block depth are actual dimensions.
4. The steel deck reinforcing bars shown on the drawings are 16 mm diameter ASTM A722 bars. Other bar materials and/or diameters may be used provided that each bar is designed for a maximum applied load of 35.6 kN. If the bar diameter is changed, plate and deck holes must be modified accordingly.
5. Curb and rail splices shall be located so that curb and rail members are continuous over not less than 2 posts. Curb splices shall be located a minimum of 1.5 post spacings away from rail splices. It is recommended that glulam rails be continuous over the bridge length.

MATERIALS

6. Sawn lumber and glued laminated timber shall comply with the requirements of AASHTO M168 and shall be pressure treated with wood preservative in accordance with AASHTO M133.
7. The bridge rail shall be horizontally laminated glued laminated timber; visually graded Western Species Combination No. 2 or visually graded Southern Pine Combination No. 48. Other species and grades of glued laminated timber may be used provided that the minimum tabulated values are not less than the following:
   $F_{b_{77}}$ = 12.4 MPa E = 12410 MPa
8. Posts, curbs, scuppers, and spacer blocks may be sawn lumber or glued laminated timber. When sawn lumber is used, material shall be visually graded No. 1 Southern Pine or visually graded No. 1 Douglas Fir-Larch. Glued laminated timber and other species and grades of sawn lumber may be used provided that the minimum tabulated values are not less than the following:
   F_b = 9.3 MPa E = 10342 MPa
9. Steel plates and shapes shall comply with the requirements of ASTM A36.
10. Bolts shall comply with the requirements ASTM A307, Grade 2 and should preferably be dome head timber bolts. Bolts on traffic face of rail shall be dome head.
11. Split rings shall be manufactured from SAE 1010 hot rolled carbon steel. Shear plates shall be malleable iron manufactured according to ASTM A47, Grade 32510.
12. All steel components and fasteners shall be galvanized in accordance with AASHTO M111 or AASHTO M232 or shall otherwise be provided with adequate corrosion protection. Galvanizing of high-strength steel bars shall follow the recommendations of the bar manufacturer so as not to adversely affect the mechanical properties of the steel. Galvanize steel components after welding.

FABRICATION AND CONSTRUCTION

13. To the extent possible, all wood shall be cut, drilled, and completely fabricated prior to pressure treatment with preservatives. When field fabrication of wood is required or if wood is damaged, all cuts, bore holes, and damage shall be immediately field treated with wood preservative in accordance with AASHTO M133.
14. Unless noted, malleable iron washers shall be provided under bolt heads and under nuts that are in contact with wood. Washers may be omitted under heads of dome-head timber bolts when the size and strength of the head is sufficient to develop connection strength without wood crushing.
15. The tops of rail posts and the top of the rail splice plate kerf shall be sealed with roofing cement or otherwise protected from direct exposure to weather.

The bridge railings depicted on these drawings were developed and crash tested under a cooperative research agreement between the Midwest Roadside Safety Facility of the University of Nebraska-Lincoln and the USDA Forest Service, Forest Products Laboratory.

University of Nebraska Lincoln

Crash-Tested Bridge Rails for Longitudinal Wood Decks

Glulam Timber Rail with Curb AASHTO Performance Level 1	September 1995	Sheet 1 of 2

Approach Rail Transition General Configuration

All units are in millimeters based on a soft conversion from customary U.S. units.

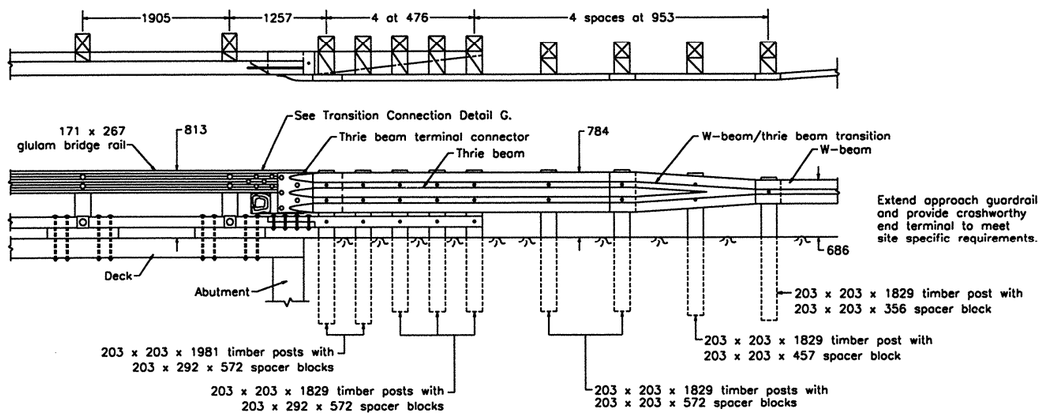

F Transition Block

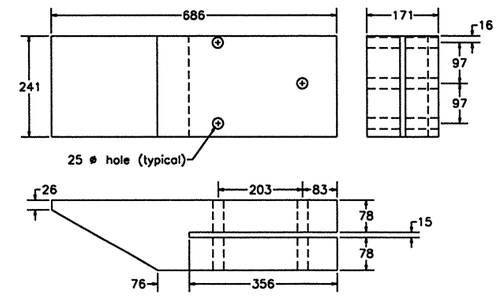

Depth of transition block is based on rail depth of 267 mm and dressed curb and scupper (both 140 mm in height). If dimensions of any components increase, depth of transition block must be verified and reduced as necessary.

In addition to the notes on Sheet 1, the following apply to the approach rail transition:

1. The approach rail transition was successfully crash tested to the requirements for Service Level 2 (SL-2), as outlined in NCHRP Report 230.
2. Thrie beam and thrie beam terminal connector shall be 10 gage. W-beam/thrie beam transition and w-beam shall be 12 gage. All shall comply with the requirements of AASHTO M180.
3. W-beam and thrie beam rail splice bolts and post bolts shall comply with AASHTO M180.

G Transition Connection Details

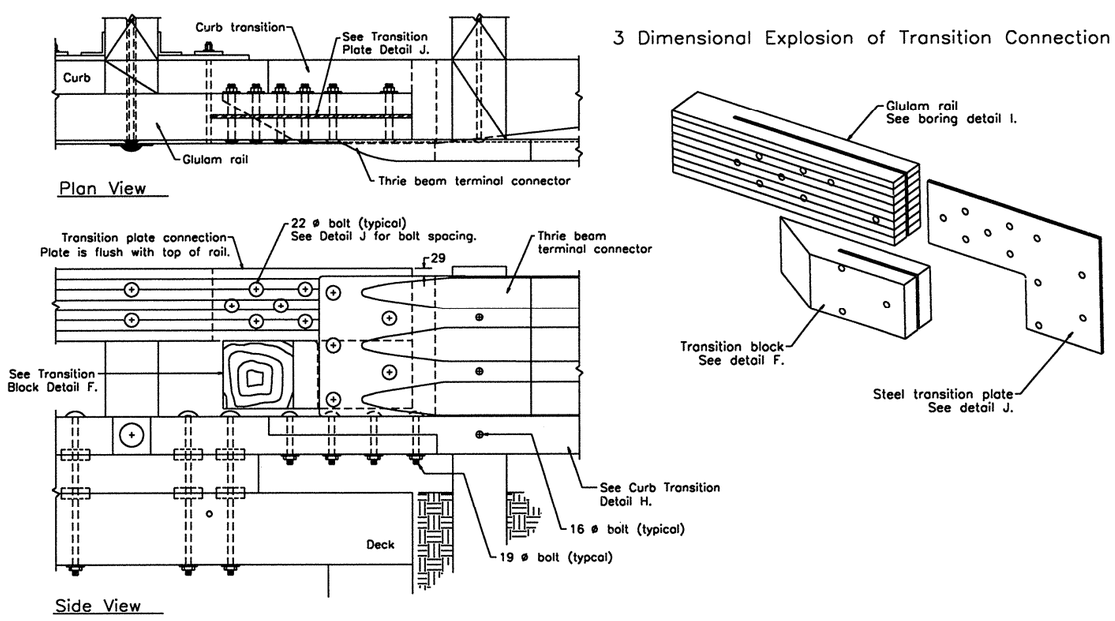

H Curb Transition

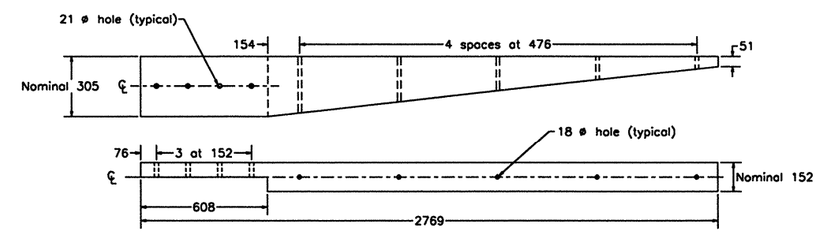

I Transition Glulam Rail Boring Detail

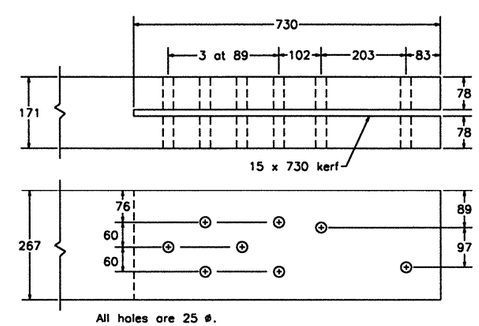

J Steel Transition Plate

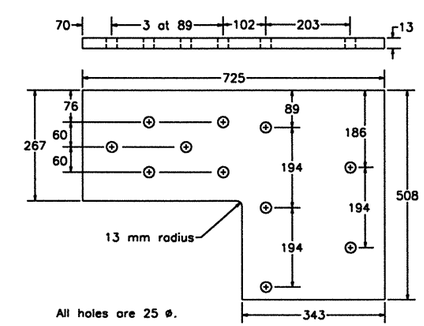

The bridge railings depicted on these drawings were developed and crash tested under a cooperative research agreement between the Midwest Roadside Safety Facility of the University of Nebraska-Lincoln and the USDA Forest Service, Forest Products Laboratory.

University of Nebraska Lincoln

Crash-Tested Bridge Rails for Longitudinal Wood Decks

Glulam Timber Rail with Curb AASHTO Performance Level 1	September 1995	Sheet 2 of 2

General Configuration

All units are in millimeters based on a soft conversion from customary U.S. units.

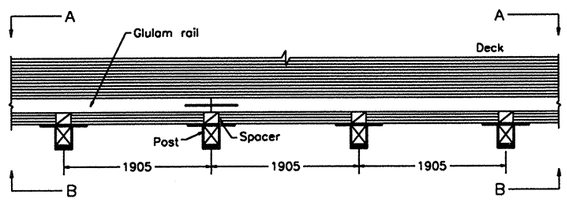

Plan View

Section A–A

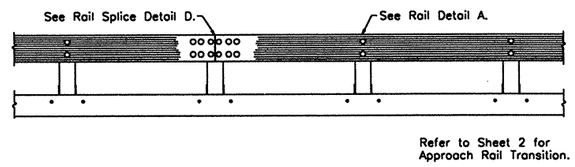

Front Elevation

Section B–B

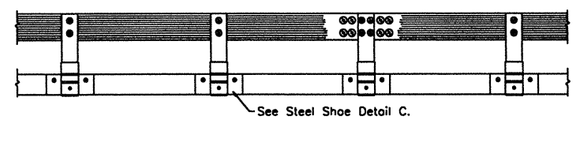

Back Elevation

A Railing Details

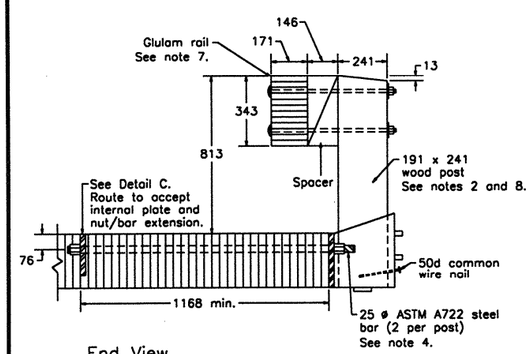

End View

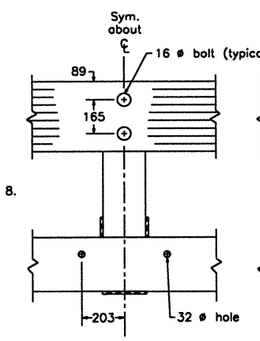

Front View

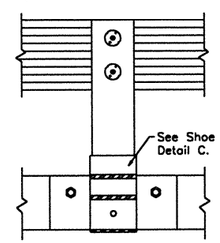

Back View

B Internal Steel Plate

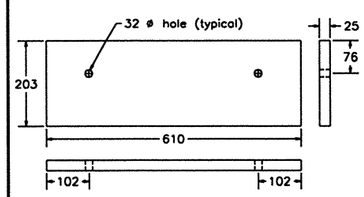

C Steel Shoe Details

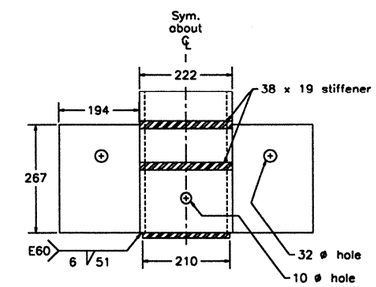

Side View

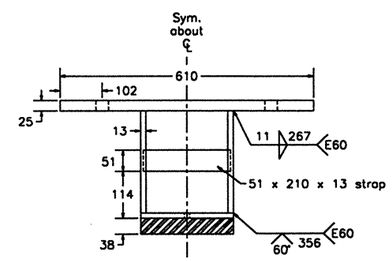

Plan View

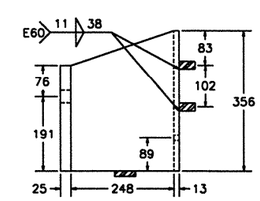

End View

D Rail Splice Details

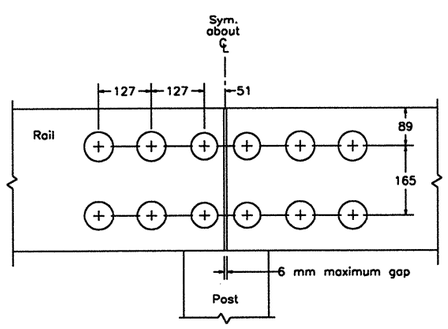

Side View

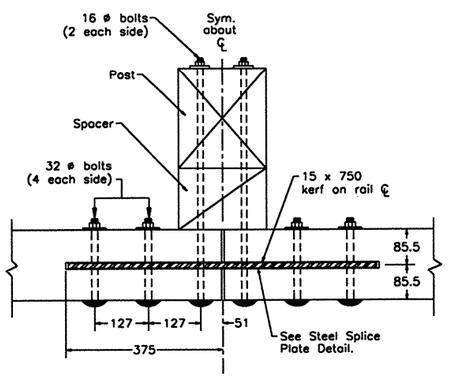

Plan View

Steel Splice Plate

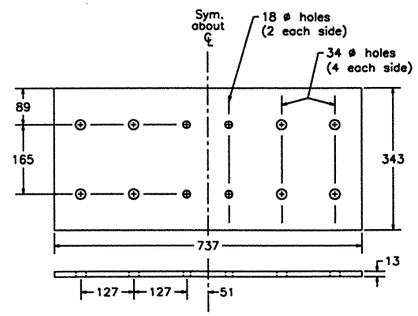

DESIGN

1. This bridge rail was successfully crash tested to the requirements for Performance Level 1 (PL–1), as outlined in the 1989 AASHTO Guide Specifications for Bridge Railings. It is adaptable to longitudinal stress–laminated, spike–laminated, nail–laminated, and glued laminated timber decks which are 267 mm or greater in actual thickness.

2. Dimensions for the wood rail, post, and spacer are actual dimensions. Post dimensions correspond to the standard dressed dimensions for a nominal 203 x 254 mm member that is surfaced on 4 sides (S4S).

3. The depth of the glulam timber rail may be increased to a maximum of 349 mm to allow for standard glulam timber sizes. In such cases, detail dimensions shall be verified and modified accordingly.

4. The steel deck reinforcing bars shown on the drawings are 25 mm diameter ASTM A722 bars. Other bar materials and/or diameters may be used provided that each bar is designed for a maximum applied load of 177.9 kN. If the bar diameter is changed, plate and deck holes must be modified accordingly.

5. Rail splices shall be located so rail members are continuous over not less than 4 posts. It is recommended that the rail be continuous over the bridge length.

MATERIALS

6. Sawn lumber and glued laminated timber shall comply with the requirements of AASHTO M168 and shall be pressure treated with wood preservative in accordance with AASHTO M133.

7. The bridge rail shall be horizontally laminated glued laminated timber; visually graded Western Species Combination No. 2 or visually graded Southern Pine Combination No. 48. Other species and grades of glued laminated timber may be used provided that the minimum tabulated values are not less than the following:
   F_{byy} = 12.4 MPa
   E = 12410 MPa

8. Posts and spacer blocks may be sawn lumber or glued laminated timber. When sawn lumber is used, material shall be visually graded No. 1 Southern Pine or visually graded No. 1 Douglas Fir–Larch. Glued laminated timber and other species and grades of sawn lumber may be used provided that the minimum tabulated values are not less than the following:
   F_b = 9.3 MPa
   E = 10342 Mpa

9. Steel plates and shapes shall comply with the requirements of ASTM A36.

10. Bolts shall comply with the requirements ASTM A307, Grade 2 and should preferably be dome head timber bolts. Bolts on traffic face of rail shall be dome head.

11. All steel components and fasteners shall be galvanized in accordance with AASHTO M111 or AASHTO M232 or shall otherwise be provided with adequate corrosion protection. Galvanizing of high–strength steel bars shall follow the recommendations of the bar manufacturer so as not to adversely affect the mechanical properties of the steel. Galvanize steel components after welding.

FABRICATION AND CONSTRUCTION

12. Welding shall be completed in accordance with the requirements of the ANSI/AASHTO/AWS D1.5–88 Bridge Welding Code.

13. To the extent possible, all wood shall be cut, drilled, and completely fabricated prior to pressure treatment with preservatives. When field fabrication of wood is required or if wood is damaged, all cuts, bore holes, and damage shall be immediately field treated with wood preservative in accordance with AASHTO M133.

14. Unless noted, malleable iron washers shall be provided under bolt heads and under nuts that are in contact with wood. Washers may be omitted under heads of dome–head timber bolts when the size and strength of the head is sufficient to develop connection strength without wood crushing.

15. The tops of rail posts and the top of the rail splice plate kerf shall be sealed with roofing cement or otherwise protected from direct exposure to weather.

The bridge railings depicted on these drawings were developed and crash tested under a cooperative research agreement between the Midwest Roadside Safety Facility of the University of Nebraska-Lincoln and the USDA Forest Service, Forest Products Laboratory.

University of Nebraska Lincoln

Crash-Tested Bridge Rails for Longitudinal Wood Decks

Glulam Timber Rail without Curb AASHTO Performance Level 1	September 1995	Sheet 1 of 2

Approach Rail Transition General Configuration

All units are in millimeters based on a soft conversion from customary U.S. units.

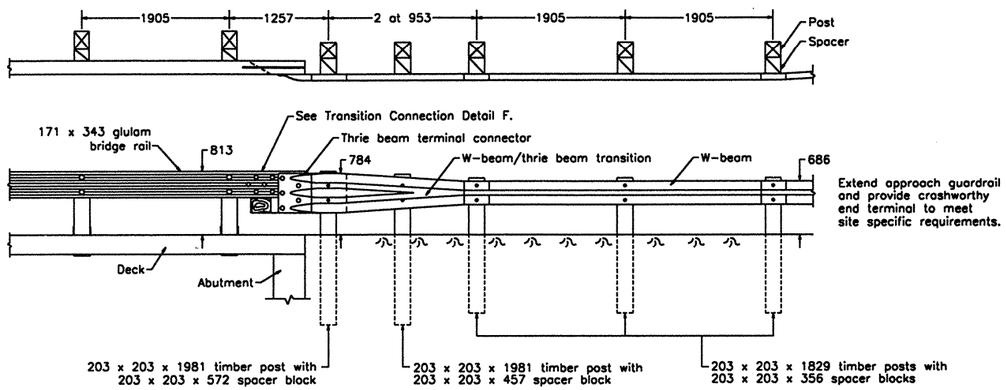

E Steel Transition Plate

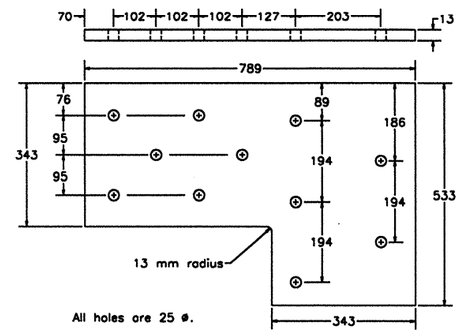

In addition to the notes on Sheet 1, the following apply to the approach rail transition:

1. The approach rail transition was successfully crash tested to the requirements for Service Level 1 (SL-1), as outlined in NCHRP Report 230.
2. Thrie beam terminal connector shall be 10 gage. W-beam/thrie beam transition and w-beam shall be 12 gage. All shall comply with the requirements AASHTO M180.
3. W-beam and thrie beam rail splice bolts and post bolts shall comply with AASHTO M180.

F Transition Connection Details

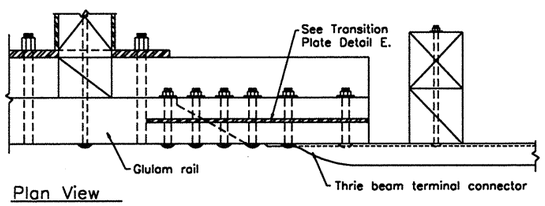

Plan View

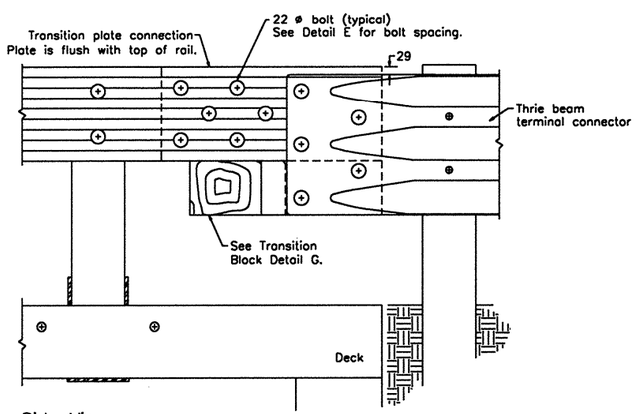

Side View

3 Dimensional Explosion of Transition Connection

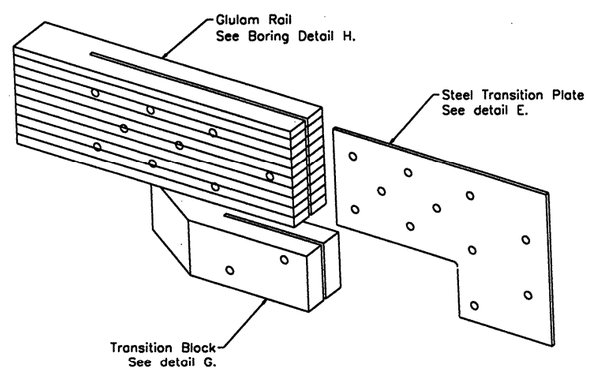

G Transition Block

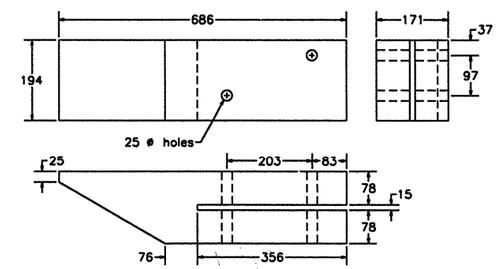

H Transition Glulam Rail Boring Detail

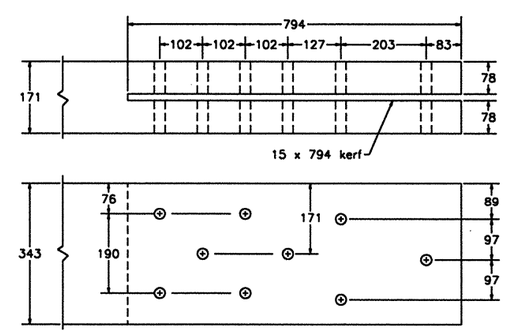

The bridge railings depicted on these drawings were developed and crash tested under a cooperative research agreement between the Midwest Roadside Safety Facility of the University of Nebraska-Lincoln and the USDA Forest Service, Forest Products Laboratory.

University of Nebraska Lincoln

Crash-Tested Bridge Rails for Longitudinal Wood Decks

Glulam Timber Rail without Curb AASHTO Performance Level 1	September 1995	Sheet 2 of 2

General Configuration

All units are in millimeters based on a soft conversion from customary U.S. units.

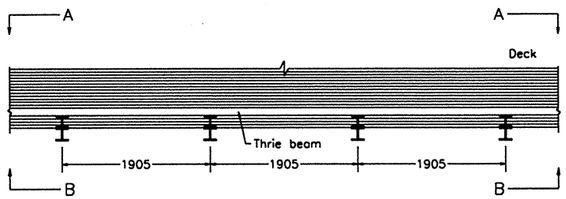

Plan View

Section A–A

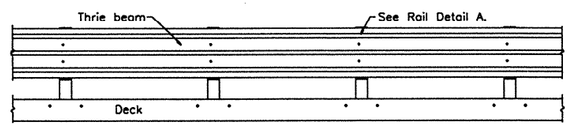

Refer to Sheet 2 for Approach Rail Transition.

Front Elevation

Section B–B

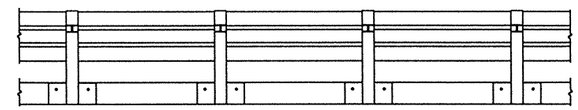

Back Elevation

A Railing Details

For stress–laminated decks, omit internal plate and ASTM A722 steel bars.

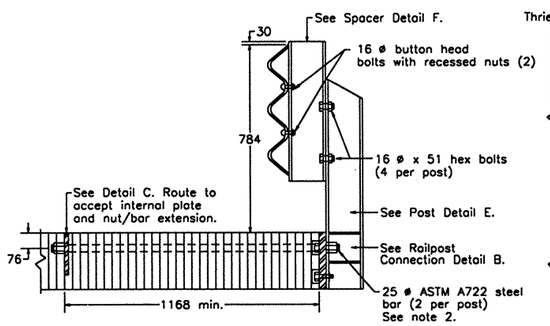

End View

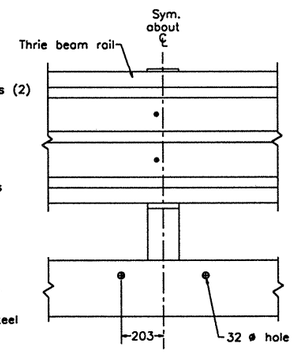

Front View

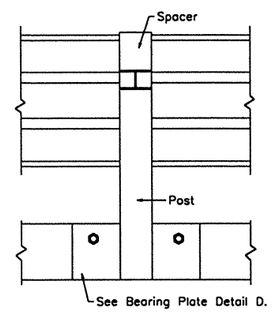

Back View

B Rail Post Connection

Note: 25 ø steel bars omitted for clarity.

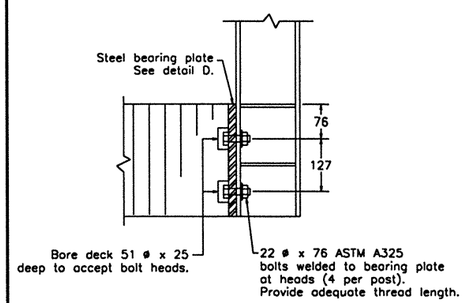

End View

C Internal Steel Plate

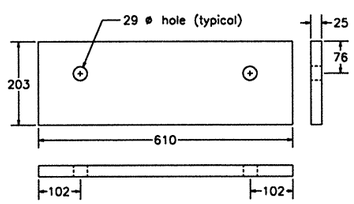

D Steel Bearing Plate

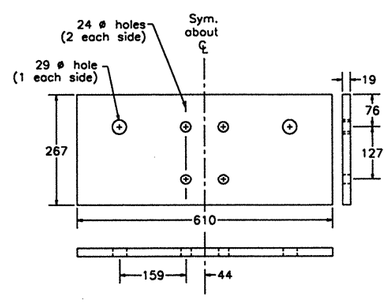

E W150 x 22 Steel Post

Holes in long flange only.

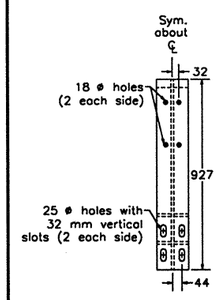

Front View

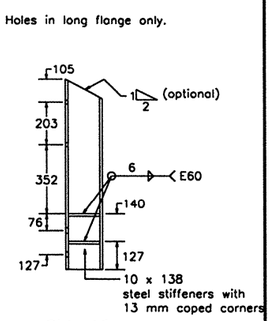

Side View

F W150 x 22 Steel Spacer

All holes are 18 ø.

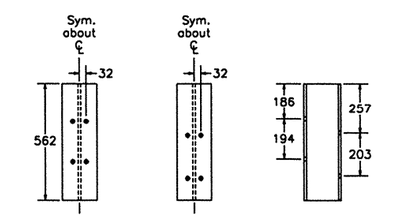

Rail Side

Post Side

Side View

DESIGN

1. This bridge rail was successfully crash tested to the requirements for Performance Level 1 (PL–1), as outlined in the 1989 AASHTO Guide Specifications for Bridge Railings. It is adaptable to longitudinal stress–laminated, spike–laminated, nail–laminated and glued laminated timber decks which are 267 mm or greater in actual thickness.

2. The steel deck reinforcing bars shown on the drawings are 25 mm diameter ASTM A722 bars. Other bar materials and/or diameters may be used provided that each bar is designed for a maximum applied load of 195.7 kN. If the bar diameter is changed, plate and deck holes must be modified accordingly.

MATERIALS

3. The bridge rail shall be 10 gage thrie beam. Unless noted, all rail, rail splice and post bolts shall comply with the requirements of AASHTO M180.

4. Steel plates and shapes shall comply with the requirements of ASTM A36.

5. All steel components and fasteners shall be galvanized in accordance with AASHTO M111 or AASHTO M232 or shall otherwise be provided with adequate corrosion protection. Galvanizing of high–strength steel bars shall follow the recommendations of the bar manufacturer so as not to adversely affect the mechanical properties of the steel. Galvanize steel components after welding.

FABRICATION AND CONSTRUCTION

6. Welding shall be completed in accordance with the requirements of the ANSI/AASHTO/AWS D1.5–88 Bridge Welding Code.

7. To the extent possible, all wood shall be cut, drilled, and completely fabricated prior to pressure treatment with preservatives. When field fabrication of wood is required or if wood is damaged, all cuts, bore holes, and damage shall be immediately field treated with wood preservative in accordance with AASHTO M133.

8. Washers shall be provided under hex bolt nuts.

The bridge railings depicted on these drawings were developed and crash tested under a cooperative research agreement between the Midwest Roadside Safety Facility of the University of Nebraska-Lincoln and the USDA Forest Service, Forest Products Laboratory.

University of Nebraska Lincoln

Crash-Tested Bridge Rails for Longitudinal Wood Decks

Steel Rail AASHTO Performance Level 1	September 1995	Sheet 1 of 2

Approach Rail Transition General Configuration

All units are in millimeters based on a soft conversion from customary U.S. units.

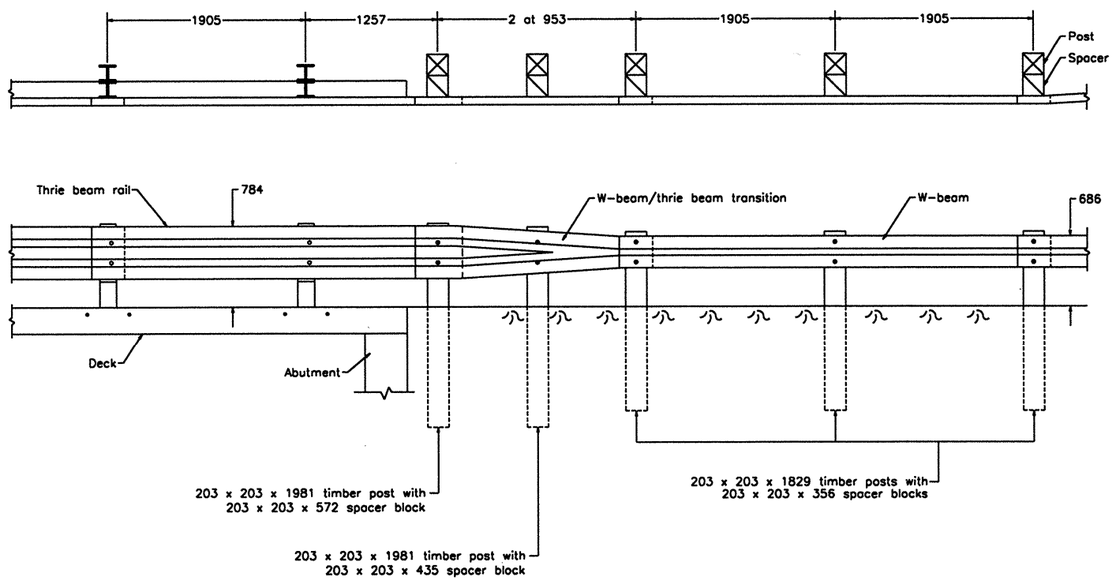

Extend approach guardrail and provide crashworthy end terminal to meet site specific requirements.

In addition to the notes on Sheet 1, the following apply to the approach rail transition:

1. The approach rail transition was successfully crash tested to the requirements for Service Level 1 (SL-1), as outlined in NCHRP Report 230.
2. Thrie beam and thrie beam terminal connector shall be 10 gage. W-beam/thrie beam transition and w-beam shall be 12 gage. All shall comply with the requirements of AASHTO M180.
3. W-beam and thrie beam rail splice bolts and post bolts shall comply with AASHTO M180.

The bridge railings depicted on these drawings were developed and crash tested under a cooperative research agreement between the Midwest Roadside Safety Facility of the University of Nebraska-Lincoln and the USDA Forest Service, Forest Products Laboratory.

University of Nebraska Lincoln

Crash-Tested Bridge Rails for Longitudinal Wood Decks

Steel Rail AASHTO Performance Level 1	September 1995	Sheet 2 of 2

General Configuration

All units are in millimeters based on a soft conversion from customary U.S. units.

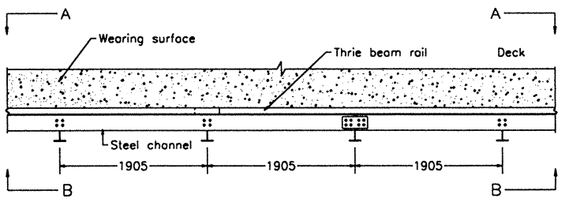

Plan

Section A–A

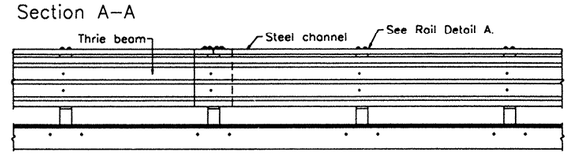

Refer to Sheets 3 and 4 for Approach Rail Transition.

Front Elevation

Section B–B

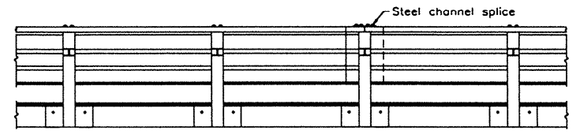

Back Elevation

A Railing Details

For stress–laminated decks, omit internal plate and ASTM A722 steel bars.

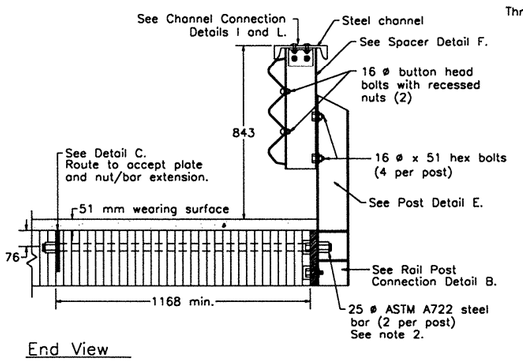

End View

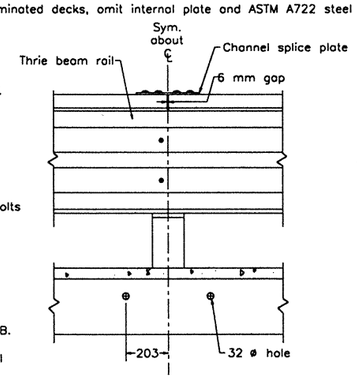

Front View

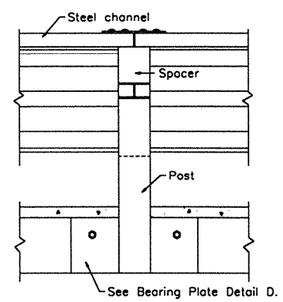

Back View

B Rail Post Connection Detail

Note: 25 ø steel bars omitted for clarity.

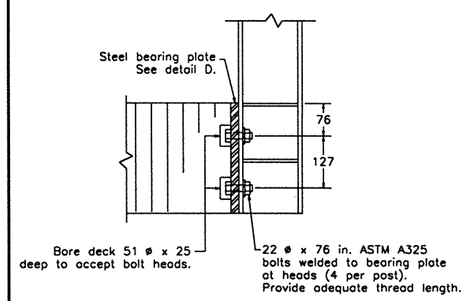

End View

C Internal Steel Plate

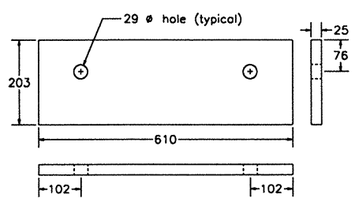

D Steel Bearing Plate

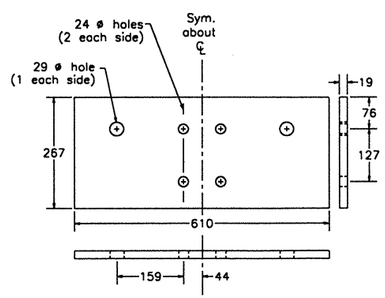

E W150 x 22 Post

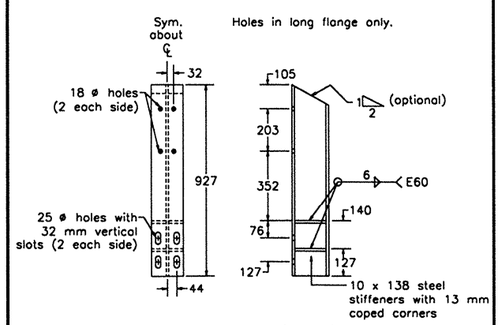

Front View

Side View

F W150 x 22 Spacer

All holes are 18 ø.

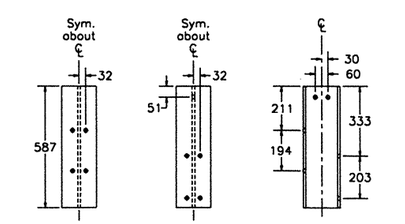

Rail Side

Post Side

Side View

DESIGN

1. This bridge rail was successfully crash tested to the requirements for Performance Level 2 (PL–2), as outlined in the 1989 AASHTO Guide Specifications for Bridge Railings. It is adaptable to longitudinal stress–laminated, spike–laminated, nail–laminated, and glued laminated timber decks which are 267 mm or greater in actual thickness.
2. Steel deck reinforcing bars shall be 25 mm diameter ASTM A722 bars.

MATERIALS

3. The bridge rail shall be 10 gage thrie beam. Unless noted, all rail, rail splice and post bolts shall comply with the requirements of AASHTO M180.
4. Steel plates and shapes shall comply with the requirements of ASTM A36.
5. All steel components and fasteners shall be galvanized in accordance with AASHTO M111 or AASHTO M232 or shall otherwise be provided with adequate corrosion protection. Galvanizing of high–strength steel bars shall follow the recommendations of the bar manufacturer so as not to adversely affect the mechanical properties of the steel. Galvanize steel components after welding.

FABRICATION AND CONSTRUCTION

6. Welding shall be completed in accordance with the requirements of the ANSI/AASHTO/AWS D1.5–88 Bridge Welding Code.
7. To the extent possible, all wood shall be cut, drilled, and completely fabricated prior to pressure treatment with preservatives. When field fabrication of wood is required or if wood is damaged, all cuts, bore holes, and damage shall be immediately field treated with wood preservative in accordance with AASHTO M133.
8. Washers shall be used in combination with hex head nuts.

The bridge railings depicted on these drawings were developed and crash tested under a cooperative research agreement between the Midwest Roadside Safety Facility of the University of Nebraska-Lincoln, the USDA Forest Service, Forest Products Laboratory and the Federal Highway Administration.

University of Nebraska Lincoln

Crash Tested Bridge Rails for Longitudinal Wood Decks

Steel Rail
AASHTO Performance Level 2

September 1995

Sheet 1 of 4

G Steel Channel Details

All units are in millimeters based on a soft conversion from customary U.S. units.

Type A: Interior Segments C200 x 17 channel; All holes are 19 ø with 27 slots.

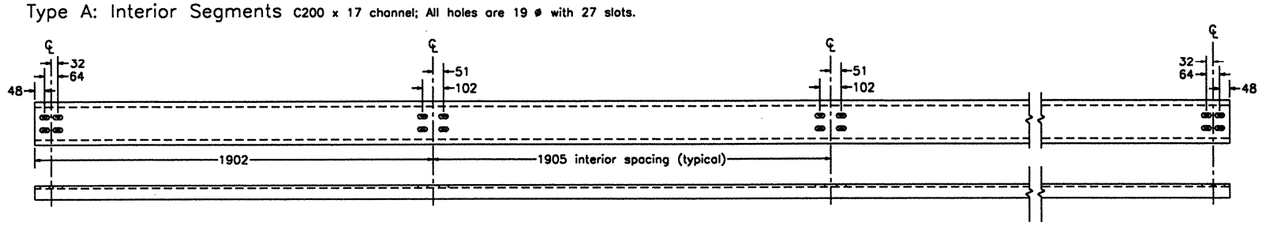

Channel Cross Section

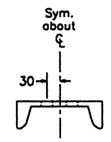

Type B: Exterior Segments at Bridge Ends C200 x 17 channel; All holes are 19 ø with 27 slots.

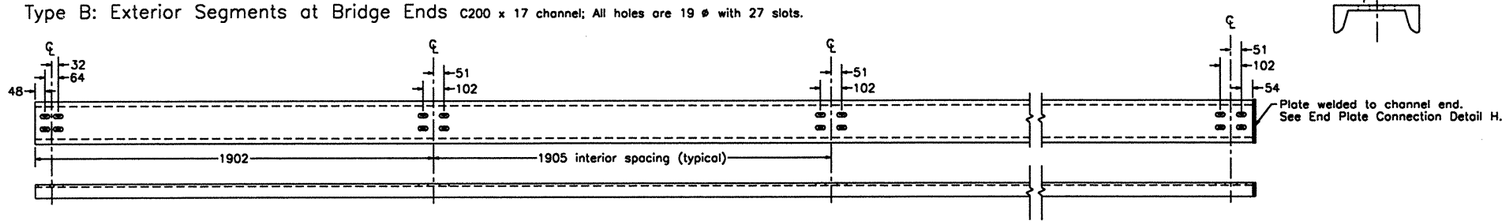

H End Plate Connection Detail

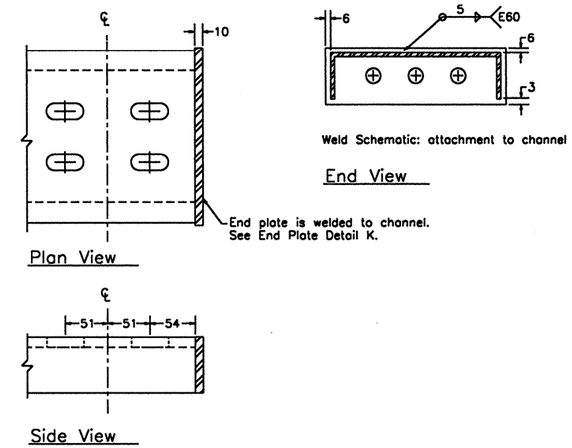

I Channel Connection Details

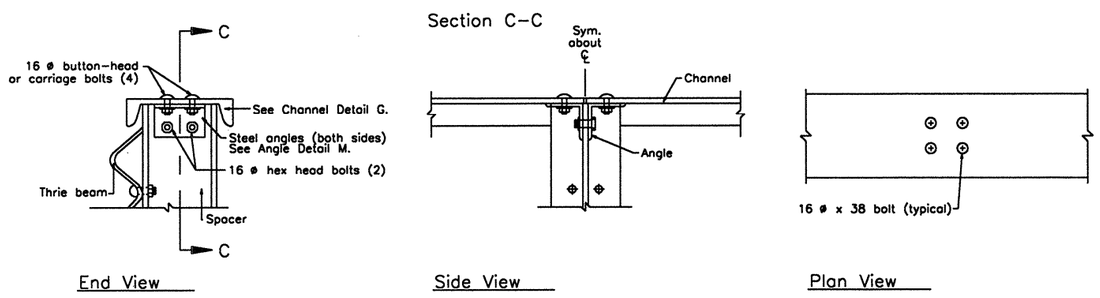

J Steel Splice Plate

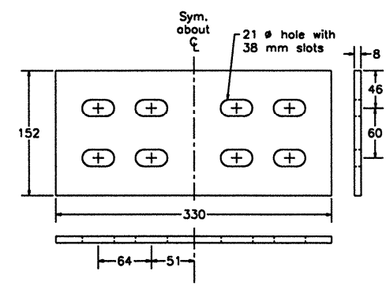

K Steel End Plate

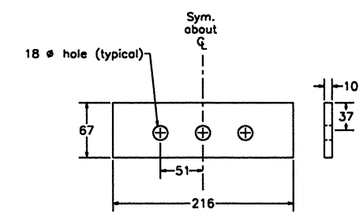

L Channel Splice Connection Details

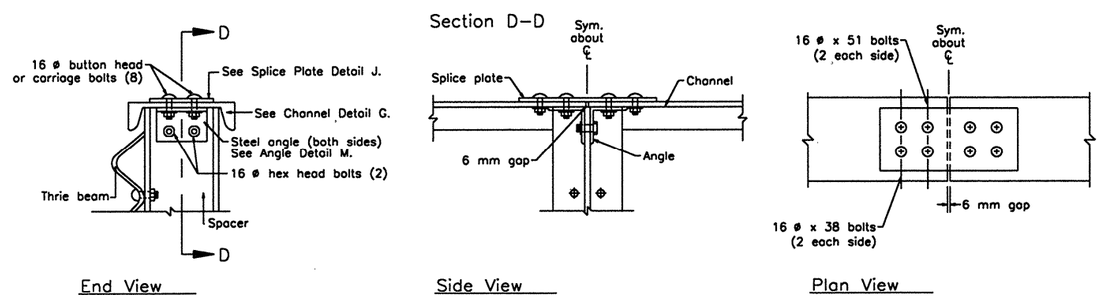

M Steel Angle

89 x 89 x 7.9 mm angle

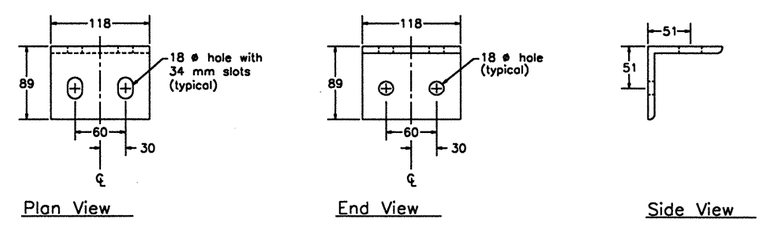

The bridge railings depicted on these drawings were developed and crash tested under a cooperative research agreement between the Midwest Roadside Safety Facility of the University of Nebraska-Lincoln, the USDA Forest Service, Forest Products Laboratory and the Federal Highway Administration.

University of Nebraska Lincoln

Crash-Tested Bridge Rails for Longitudinal Wood Decks

Steel Rail AASHTO Performance Level 2	September 1995	Sheet 2 of 4

Approach Rail Transition General Configuration

All units are in millimeters based on a soft conversion from customary U.S. units.

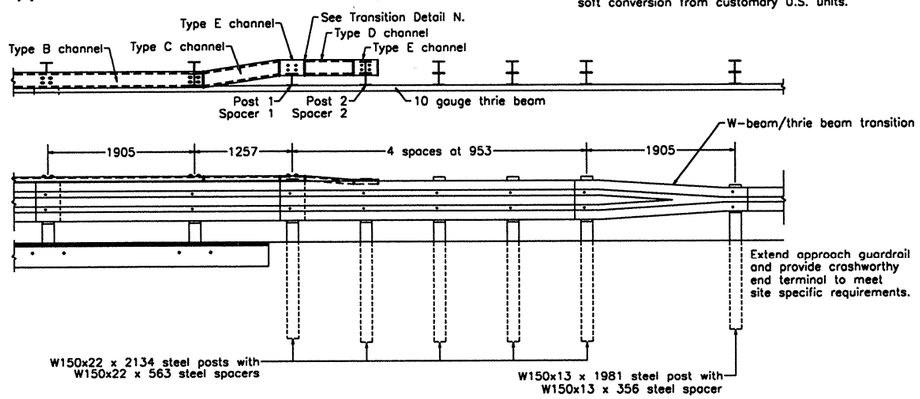

O W150 x 22 Spacer 1

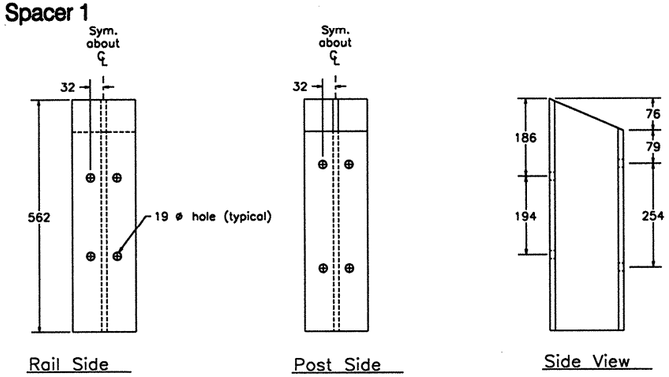

P W150 x 22 Spacer 2

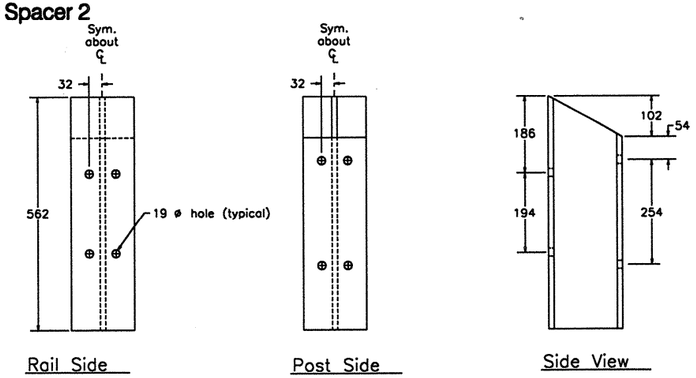

N Transition Detail

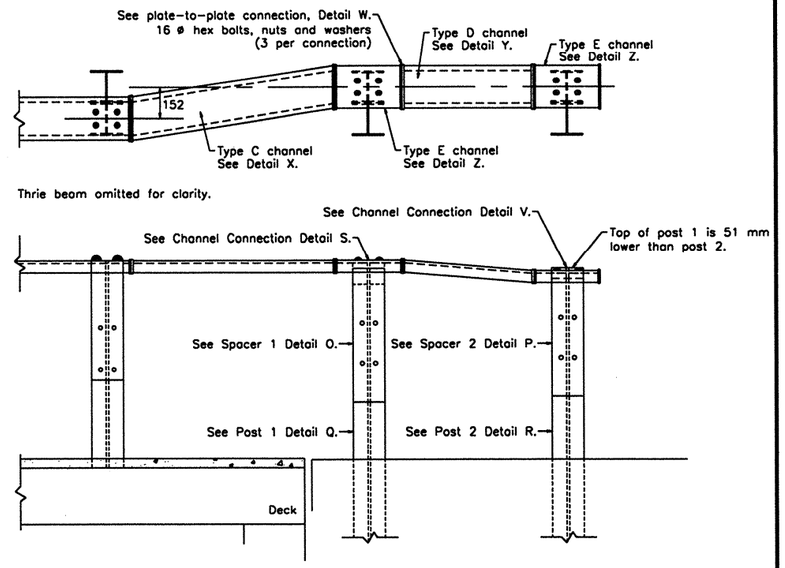

Q W150 x 22 Post 1

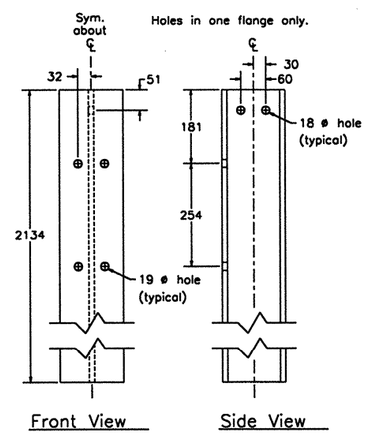

R W150 x 22 Post 2

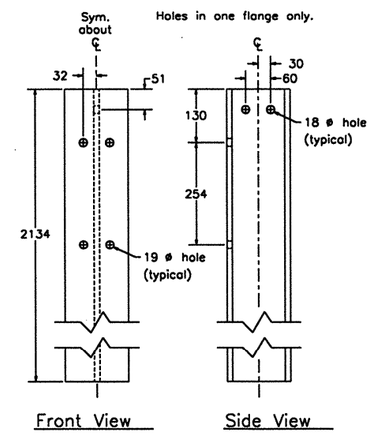

In addition to the notes on Sheet 1, the following apply to the approach rail transition:

1. The approach rail transition was successfully crash tested to the requirements for Service Level 1 (SL-1), as outlined in NCHRP Report 230.
2. Thrie beam and thrie beam terminal connector shall be 10 gage. W-beam/thrie beam transition and w-beam shall be 12 gage. All shall comply with the requirements of AASHTO M180.
3. W-beam and thrie beam rail splice bolts and post bolts shall comply with AASHTO M180.

The bridge railings depicted on these drawings were developed and crash tested under a cooperative research agreement between the Midwest Roadside Safety Facility of the University of Nebraska-Lincoln, the USDA Forest Service, Forest Products Laboratory and the Federal Highway Administration.

University of Nebraska Lincoln

Crash-Tested Bridge Rails for Longitudinal Wood Decks

Steel Rail AASHTO Performance Level 2	September 1995	Sheet 3 of 4

S Channel Connection at Post 1

All units are in millimeters based on a soft conversion from customary U.S. units.

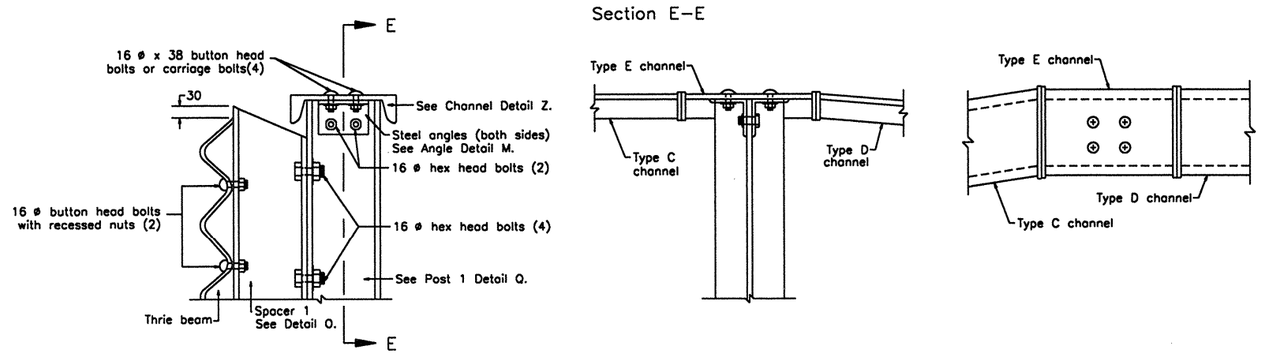

T 216 mm Steel End Plate

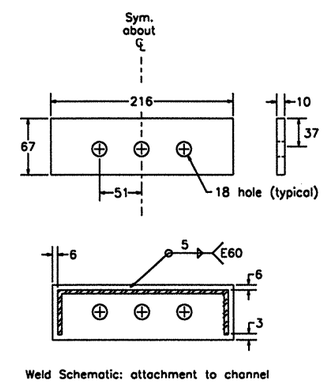

U 219 mm Steel End Plate

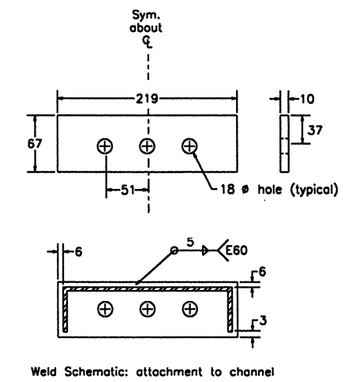

V Channel Connection at Post 2

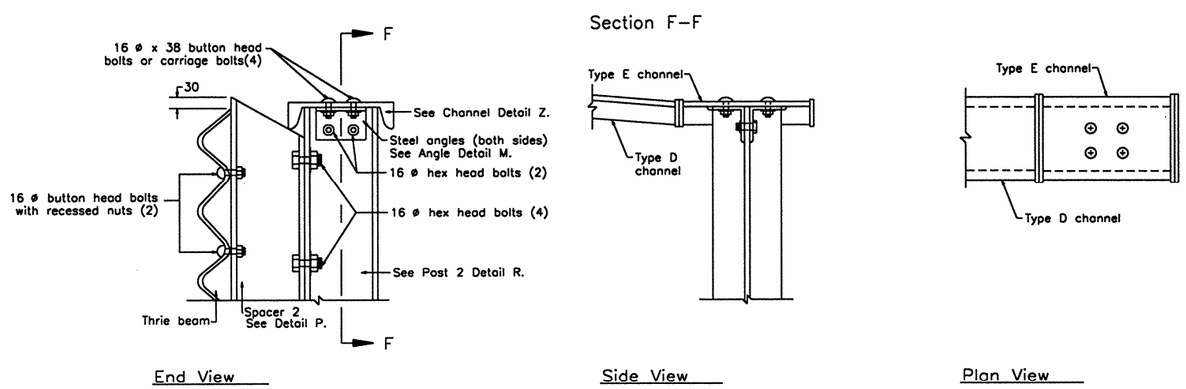

W Plate Connection Details

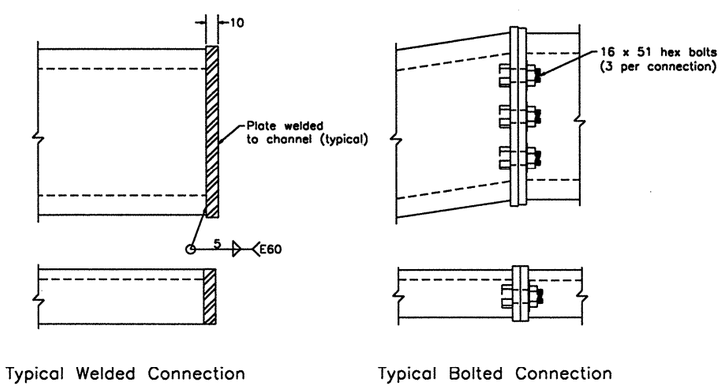

X Type C - C200 x 17 Steel Channel

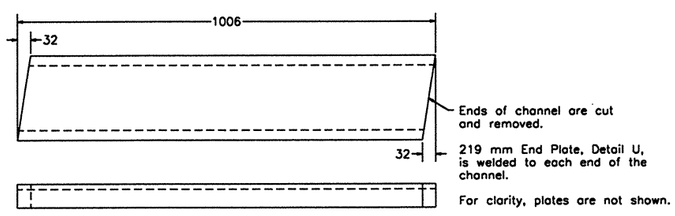

Y Type D - C200 x 17 Steel Channel

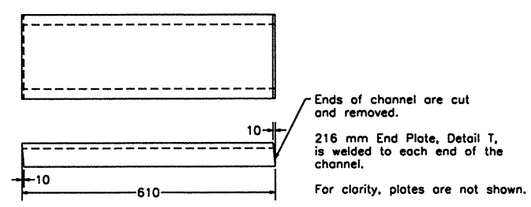

Z Type E - C200 x 17 Steel Channel

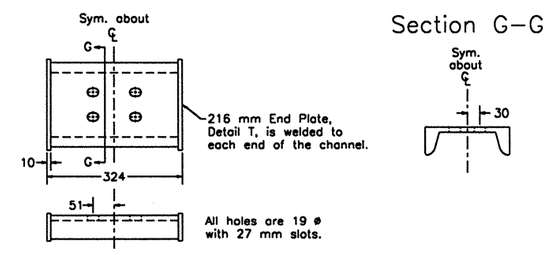

The bridge railings depicted on these drawings were developed and crash tested under a cooperative research agreement between the Midwest Roadside Safety Facility of the University of Nebraska-Lincoln, the USDA Forest Service, Forest Products Laboratory and the Federal Highway Administration.

University of Nebraska Lincoln

Crash-Tested Bridge Rails for Longitudinal Wood Decks

Steel Rail AASHTO Performance Level 2	September 1995	Sheet 4 of 4

General Configuration

All units are in millimeters based on a soft conversion from customary U.S. units.

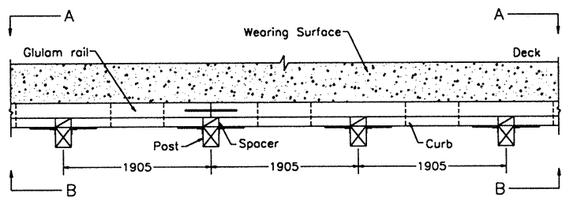

Plan

Section A–A

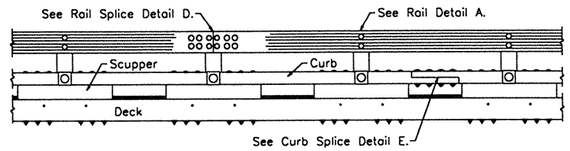

Front Elevation

Section B–B

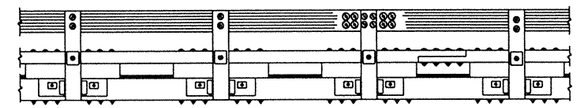

Refer to Sheet 2 for Approach Rail Transition.

Back Elevation

A Railing Details

For stress–laminated decks, omit internal plate, post plates, and ASTM A722 steel bars.

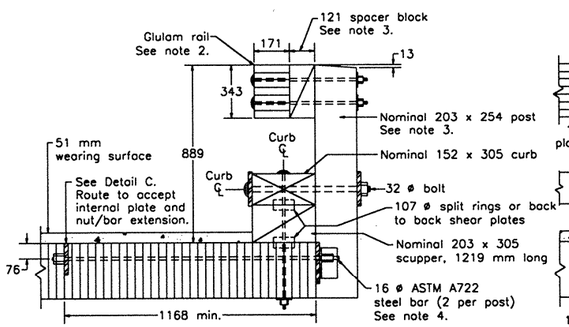

End View

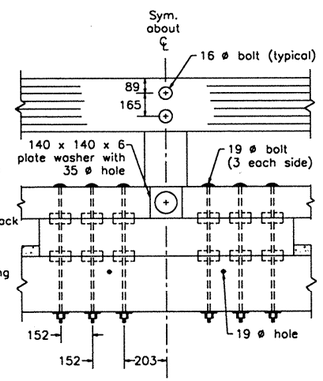

Front View

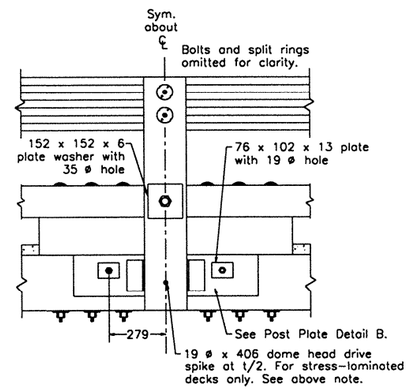

Back View

B Steel Post Plate

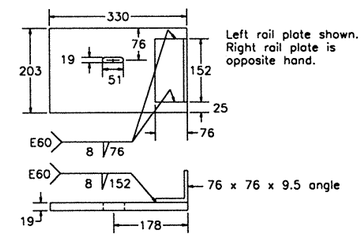

C Internal Steel Plate

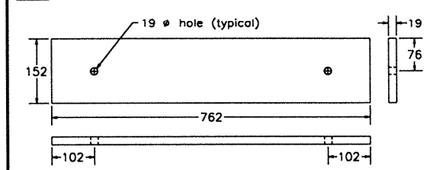

D Rail Splice Details

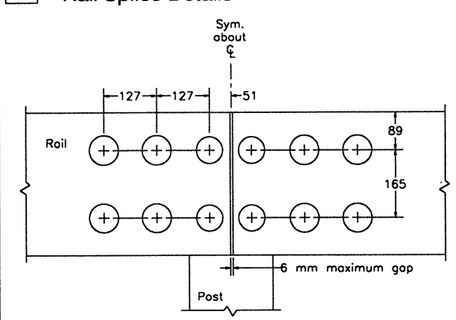

Front View

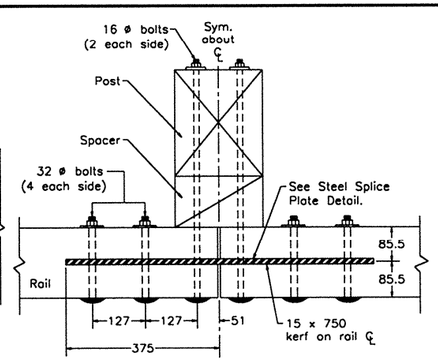

Plan View

Steel Splice Plate

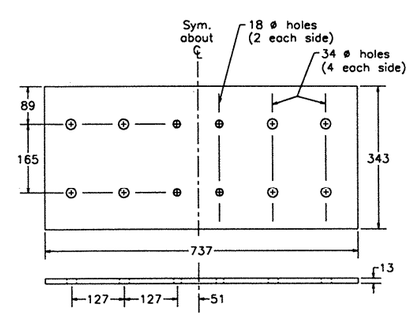

E Curb Splice Detail

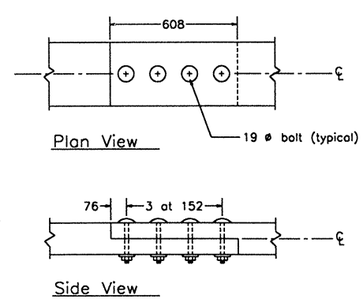

Plan View

Side View

DESIGN

1. This bridge rail was successfully crash tested to the requirements for Test Level 4 (TL–4), as outlined in NCHRP Report 350. In addition, the rail meets crash test requirements for Performance Level 2 (PL–2), as outlined in the 1989 AASHTO Guide Specifications for Bridge Railings. It is adaptable to longitudinal stress–laminated, spike–laminated, nail–laminated and glued laminated timber decks which are 267 mm or greater in actual thickness.

2. Dimensions given for glued laminated timber rails are actual dimensions. The depth of the glulam timber rail may be increased to a maximum of 349 mm to allow for other standard glulam timber sizes. In such cases detail dimensions shall be verified and modified accordingly.

3. Dimensions for wood posts, curbs, and scuppers are given as nominal dimensions. Actual dimensions may be a maximum of 13 mm less than the stated nominal dimensions depending on material surfacing. Dimensions for spacer block depth are actual dimensions.

4. Steel deck reinforcing bars shall be 16 mm diameter ASTM A722 bars.

5. Curb and rail splices shall be located so that curb and rail members are continuous over not less than 2 posts. Curb splices shall be located a minimum of 1.5 post spacings away from rail splices. It is recommended that glulam rails be continuous over the bridge length.

MATERIALS

6. Sawn lumber and glued laminated timber shall comply with the requirements of AASHTO M168 and shall be pressure treated with wood preservative in accordance with AASHTO M133.

7. The bridge rail shall be horizontally laminated glued laminated timber; visually graded Western Species Combination No. 2 or visually graded Southern Pine Combination No. 48. Other species and grades of glued laminated timber may be used provided that the minimum tabulated values are not less than the following:
   $F_{b_{yy}}$ = 12.4 MPa E = 12410 MPa

8. Posts, curbs, scuppers, and spacer blocks may be sawn lumber or glued laminated timber. When sawn lumber is used, material shall be visually graded No. 1 Southern Pine or visually graded No. 1 Douglas Fir–Larch. Glued laminated timber and other species and grades of sawn lumber may be used provided that the minimum tabulated values are not less than the following:
   F_b = 9.3 MPa E = 10342 MPa

9. Steel plates and shapes shall comply with the requirements of ASTM A36.

10. Bolts shall comply with the requirements ASTM A307, Grade 2 and should preferably be dome head timber bolts. Bolts on traffic face of rail shall be dome head.

11. Split rings shall be manufactured from SAE 1010 hot rolled carbon steel. Shear plates shall be malleable iron manufactured according to ASTM A47, Grade 32510.

12. All steel components and fasteners shall be galvanized in accordance with AASHTO M111 or AASHTO M232 or shall otherwise be provided with adequate corrosion protection. Galvanizing of high–strength steel bars shall follow the recommendations of the bar manufacturer so as not to adversely affect the mechanical properties of the steel. Galvanize steel components after welding.

FABRICATION AND CONSTRUCTION

13. To the extent possible, all wood shall be cut, drilled, and completely fabricated prior to pressure treatment with preservatives. When field fabrication of wood is required or if wood is damaged, all cuts, bore holes, and damage shall be immediately field treated with wood preservative in accordance with AASHTO M133.

14. Unless noted, malleable iron washers shall be provided under bolt heads and under nuts that are in contact with wood. Washers may be omitted under heads of dome–head timber bolts when the size and strength of the head is sufficient to develop connection strength without wood crushing.

15. The tops of rail posts and the top of the rail splice plate kerf shall be sealed with roofing cement or otherwise protected from direct exposure to weather.

The bridge railings depicted on these drawings were developed and crash tested under a cooperative research agreement between the Midwest Roadside Safety Facility of the University of Nebraska-Lincoln, the USDA Forest Service, Forest Products Laboratory and the Federal Highway Administration.

University of Nebraska Lincoln

Crash Tested Bridge Rails for Longitudinal Wood Decks

Glulam Timber Rail with Curb
NCHRP 350 Test Level 4

September 1995

Sheet 1 of 2

Approach Rail Transition General Configuration

All units are in millimeters based on a soft conversion from customary U.S. units.

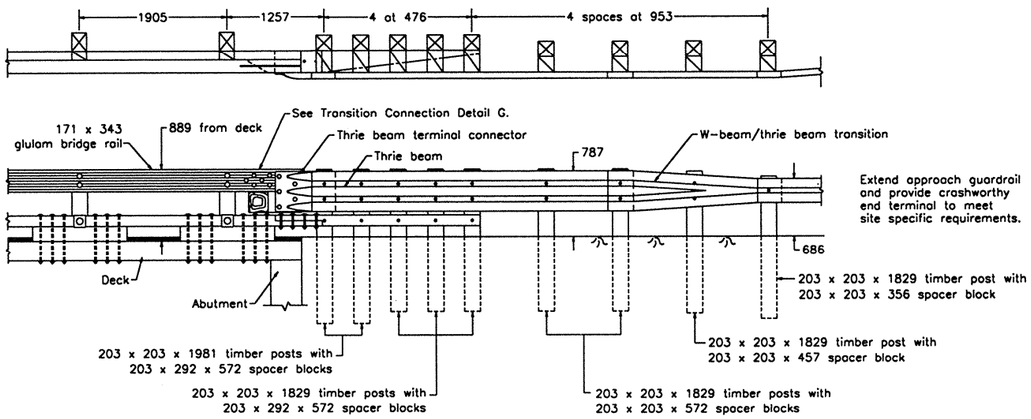

F Curb Transition Block

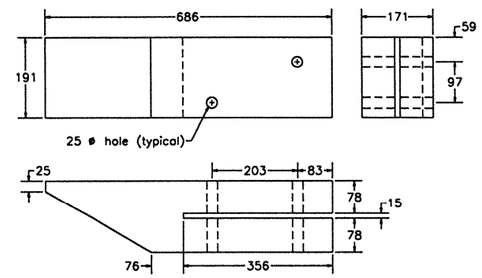

Depth of transition block is based on rail depth of 267 mm and dressed curb and scupper (140 and 191 mm in height, respectively). If dimensions of any components increase, depth of transition block must be verified and reduced as necessary.

In addition to the notes on Sheet 1, the following apply to the approach rail transition:

1. The approach rail transition was successfully crash tested to the requirements for Service Level 2 (SL-2), as outlined in NCHRP Report 230.
2. Thrie beam and thrie beam terminal connector shall be 10 gage. W-beam/thrie beam transition and w-beam shall be 12 gage. All shall comply with the requirements of AASHTO M180.
3. W-beam and thrie beam rail splice bolts and post bolts shall comply with AASHTO M180.

G Transition Connection Details

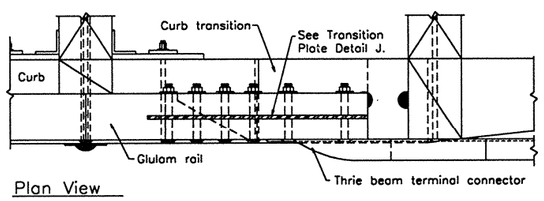

Plan View

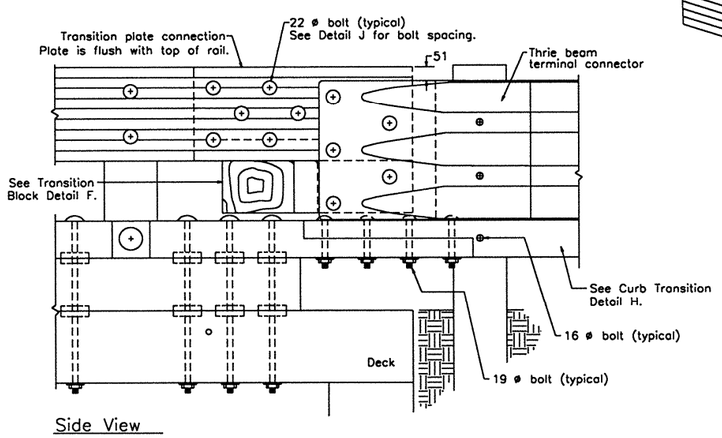

Side View

3 Dimensional Explosion of Transition Connection

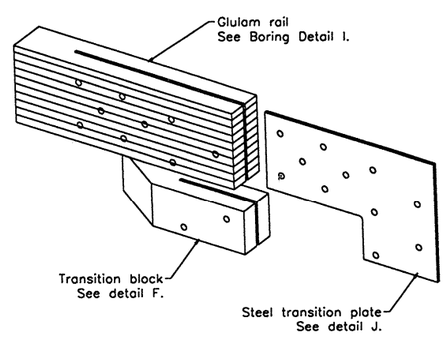

H Curb Transition

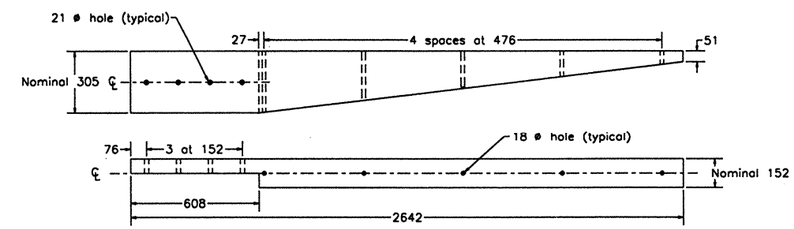

I Transition Glulam Rail Boring Detail

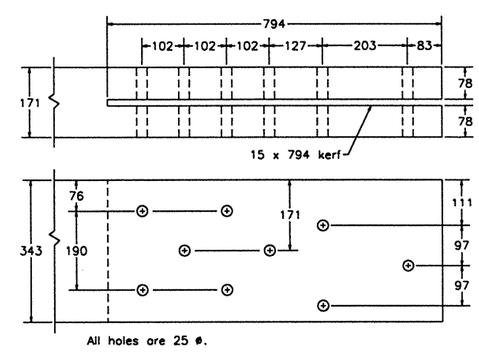

J Transition Plate

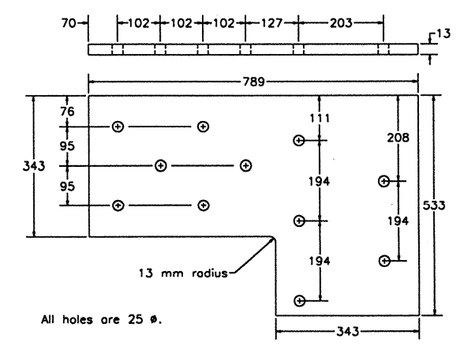

The bridge railings depicted on these drawings were developed and crash tested under a cooperative research agreement between the Midwest Roadside Safety Facility of the University of Nebraska-Lincoln, the USDA Forest Service, Forest Products Laboratory and the Federal Highway Administration.

University of Nebraska Lincoln

Crash-Tested Bridge Rails for Longitudinal Wood Decks

Glulam Timber Rail with Curb NCHRP 350 Test Level 4	September 1995	Sheet 2 of 2

Ritter, Michael A.; Fuller, Ronald K.; Lee, Paula D. Hilbrick; Rosson, Barry T.; Duwadi, Sheila Rimal. 1995. Plans for crash-tested bridge railings for longitudinal wood decks. Gen. Tech. Rep. FPL-GTR-87. Madison, WI: U.S. Department of Agriculture, Forest Service, Forest Products Laboratory. 27 p.