United States
Department of
Agriculture

Forest Service

Forest
Products
Laboratory

General
Technical
Report
FPL-GTR-52

Unitizing Goods on Pallets and Slipsheets

Abstract

Packaging, handling, and shipping methods and facilities have changed drastically since World War II. Today, most products are individually packaged and then combined into unitized loads for more efficient handling, storage, and shipping. The purpose of this manual is to promote the most effective use of wood and wood fiber in current packaging and shipping practices by providing a basic understanding of the many factors involved in selecting an optimal method of unitizing goods on pallets and slipsheets. The manual also provides a valuable place of reference for the numerous standards and specifications relating to unitizing loads.

Keywords: Unitizing, palletizing, pallets, slipsheets, strapping, shrinkwrap, stretchwrap, netwrap, adhesives, hot melts, material handling, packaging.

November 1986

Laundrie, James F. Unitizing goods on pallets and slipsheets. Gen. Tech. Rep. FPL-GTR-52. Madison, WI: U.S. Department of Agriculture, Forest Service, Forest Products Laboratory; 1986. 45 p

A limited number of free copies of this publication are available to the public from the Forest Products Laboratory, One Gifford Pinchot Drive, Madison, WI 53705-2398. Laboratory publications are sent to over 1,000 libraries in the United States and elsewhere.

The Laboratory is maintained in cooperation with the University of Wisconsin.

Acknowledgments

The figures in this manual are adapted from a variety of sources. They are as follows:

Figure number	Based on information provided by:
1	Forest Products Laboratory
2	A-B-C Packaging Machine Corporation
3-7	Material Handling Engineering Magazine
8	Signode Corporation
9	Mobile Chemical Company
10	Lantech Incorporated
11	CTX Products Company
12-13	Gloucester Engineering Company
14-15	Radiant Engineering Company
16-17	CTX Products Company
18	Malow Corporation and Trident Manufacturing Company
19	Presto Products Incorporated
20	MIMA Corporation
21	Lantech Corporation
22	Aktron Corporation
23-24	Bemis Company and Conwed Company
25-34	National Wood Pallet & Container Association, Virginia Polytechnic Institute and State University, and Forest Products Laboratory
35	Inca Presswood Pallets Limited
36	Elberta Crate & Box Co.
37	Menasha Corporation
38	St. Regis Paper Co.
39	Michigan Technological University
40	Amoco Engineered Plastics Co. and Menasha Corporation
41	Banner Metals Co.
42-45	Eaton Corporation
46	Rack Manufacturers Institute
47-48	American National Standards institute, Committee MH1
49-50	Clark Equipment Company
51	Hyster Company Eaton Corporation Clark Equipment Co.

Unitizing Goods on Pallets and Slipsheets

James F. Laundrie, Chemical Engineer
Forest Products Laboratory, Madison, WI

Preface

This manual presents information necessary for an understanding of the factors involved in choosing an optimal method of unitizing goods on pallets and slipsheets. Unitizing is the process of combining individually packaged products into a larger, stable, unit load convenient for handling, shipping, and storage. Whatever packaging method is used-single containers ("break-bulk") or bulk packaging or unitizing-the shipper has to choose from a variety of handling and shipping methods and transport vehicles: these are considerations that face all who must decide how products are to be packaged for shipment. Here, the options are presented for the packaging and shipping of unitized loads.

Why Unitize?

Whenever practical, individual products are combined and shipped as larger unitized loads. Unitizing has significant advantages. The cost of labor arising from manual handling is reduced appreciably by use of mechanical equipment handling larger unitized loads. Required shipping time and losses by pilferage are reduced. Moreover, unitized handling equipment produces a mechanically milder shipping environment, so that the goods generally need less protection enroute to their destination. The last point will be better appreciated by considering the common hazards of packages in the shipping environment.

Shipping Environment

Some of the most common hazards to goods being shipped are:

- Shock and vibration that occurs within the factory, during transportation to the distribution warehouse by truck, rail, air, or barge, during humping operations in train-marshalling yards, when trucking from distribution warehouses to consumer. and during shipment overseas by ship or air;
- Accidental impacts during manual and mechanical handling operations, including dropping flatwise, edgewise, and cornerwise at various stages during its distribution;
- Compressive forces caused by stacking in storage and in transport vehicles;
- Creep and a resulting looseness from compressive forces;
- Temperature and moisture extremes in storage and transportation.

Definition of the shipping environment has been slow because of its complex and changing nature. The most comprehensive analysis of the current shipping environment was prepared by Ostrem and Godshall (1979).

Purpose and Use of This Manual

The main purpose of this manual is to provide a basic understanding of factors that must be weighed in choosing an optimal method of unitizing goods on pallets and slipsheets. These factors are many and, in most situations, a variety of persons are eventually involved in making the decision how a load is to be unitized.

Part I deals with major considerations in the preparation of the unit load. Discussion includes questions of standards for stacking a load; unitizing equipment, and the several ways to stabilize the load: by antiskid treatment to diminish the movement of its parts, or by strapping, shrink wrapping, or stretch wrapping or netting to restrain the load. When unitized, the load should be compatable with the storage, handling, and shipping facilities by which it is sent to its destination. Shipping cost must, of course, be kept to a minimum, and a number of the factors discussed bear on the total cost of shipment. Moreover, the level of production and the nature of the loads may justify more or less new investment in equipment to reduce overall cost and improve the system.

Most often unitization involves the use of wood pallets or wood-derived slipsheets as bases for the unitized load. Part II, therefore, is devoted to a discussion of pallets and slipsheets. It covers the classification by use of wood pallets, description of a variety of designs, and consideration of the properties intrinsic to the wood or resulting from how the wood members were prepared and the pallets constructed. Common defects and restrictions on substandard pallets are noted. Sometimes, nonwood pallets or slipsheets are desirable, end these also are discussed, to extend the usefulness of the, manual as a guide to the use of all the materials employed in unit-load preparation.

The manual contains sufficient information to provide only a general understanding of the factors involved in choosing an optimal unitizing method. To learn the specific requirements for individual products and situations, of which a wide variety exist, copies of the standards and specifications listed in Appendix B should be obtained from the issuing organizations.

Because every product and every situation is different, it is recommended that packaging, material-handling, warehousing, distribution, and marketing personnel should work together carefully to analyze the internal situation of the particular producer with regard to the method of unitization, and then work closely with outside material suppliers, equipment manufacturers, and the transport industry.

Contents

	Page
Preface	iii
Why Unitize?	iii
Shipping Environment	iii
Purpose and Use of This Manual	iii
Part I: Unit-Load Preparation	
Introduction	1
Stacking on Pallets and Slipsheets	1
Standards for Stacking a Unit Load	1
Unitizing Machines	2
Load Stabilization	4
Antiskid Treatment	4
Strapping	4
Shrink Wrapping	8
Stretch Wrapping	13
Stretch Netting	16
Part II: Pallets and Slipsheets	
Introduction	19
Pallets	19
Lumber Pallets	19
Pallet Wood Members	23
Pallet Fasteners	26
Nonlumber Pallets	28
Pallet-Handling Equipment	33
Slipsheets	36
Materials	36
Slipsheet-Handling Equipment	37
Part III: Appendixes	
Appendix A-References	40
Appendix B-Specifications and Test Methods	41
Appendix C-Specific Gravity and Modulus of Rupture	43

Part I
Unit-Load Preparation

Introduction

Because most products are shipped in corrugated fiberboard boxes of various designs, sizes, and shapes, the following discussion is for the most part about the preparation of unit loads of corrugated fiberboard boxes. Unitized loads may, in fact, consist of almost anything, from corrugated fiberboard boxes, sacks, bags, drums, pails, and trays to individual items such as stoves, refrigerators, washing machines, and clothes dryers. Each of these types of container or product presents its own peculiar unitization problems which are not covered here.

The essential steps in unitizing are, first, stacking the load on pallets or slipsheets, and then stabilizing the load by one of several methods. Antiskid or adhesive treatment may be applied to prevent movement of individual parts of the load. Strapping may be attached around the load, using a tensioner to tighten the strap and a seal (applied by crimp or notch sealer) to secure it in place, or using a combination tensioning-and-sealing tool. The load may be wrapped in shrink film and heat applied to shrink the film close about the load, or it may be wrapped in stretch film or stretch netting under tension so that it clings to the load. Each possibility is considered in what follows, together with Me equipment by which it may be accomplished.

Stacking on Pallets and Slipsheets

Standards for Stacking a Unit Load[1]

A comprehensive standard has been developed to accomplish on a modular basis the fining of the contents within the package, the packages within the unit load, and the unit loads within the truck trailer, freight container, or railroad boxcar. Five unit-load sizes are recommended in this standard, and dimensions are expressed both as net unit-load sizes (NULS) and as plan-view sizes (PVS). The difference between PVS and NULS is usually 4 percent of NULS and is the allowance made for stacking irregularity and storage bulge. Of the five unit-load sizes used in this standard, the 1,200 mm by 1,000 mm (47.24 in by 39.37 in) comes closest to matching the pallet sizes (1,219 mm by 1,016 mm (48 in by 40 in) or 1,016 mm by 1,219 mm (40 in by 48 in) commonly used in the United States. The other four NULS are 1,100 mm (43.31 in) by either 1,320, 1,100, 880, or 825 mm (51.97, 43.31, 34.65, or 32.48 in). The five unit-load sizes in this standard are termed “intermodal unit loads” because they fit not only the general purpose freight container which is intermodal to ship, truck, and rail, but the domestic closed-trailer truck and the domestic railroad boxcar.

Extensive lists of package dimensions and stacking patterns are given in Appendixes C and D of this ANSI text. Alternative patterns are illustrated in many instances. The choice of pattern depends on the nature of the package and its contents, as well as the expected conditions of transporting. stacking, and storage. Some of the more common patterns are shown in figure 1. When the contents of the package carry the load, it is common to interlock for greater stability during stacking. However, when the contents of the package carry the load only partially or not at all, columnar stacking is used to provide full-edge support and thereby utilize the maximum potential compressive strength of the package. Variables such as product volume and weight, vehicle door heights, interior heights, and load-carrying capacity, all influence unit-load heights. The following unit-load heights[2] based on alternating loads have been selected to achieve maximum volume: 813, 1,041, 1,092, 1,372, and 1,829 mm (32, 41, 43, 54, and 72 in).

---

[1]The American National Standard for Unit-Load and Transport-Package Sizes ANSI MH 10.1M-1980 (Appendix B)

[2]The American National Standard for Surface Vehicles—Unit-Load Heights for Palletized Loads, ANSI MH10.6M-1983 (Appendix B).

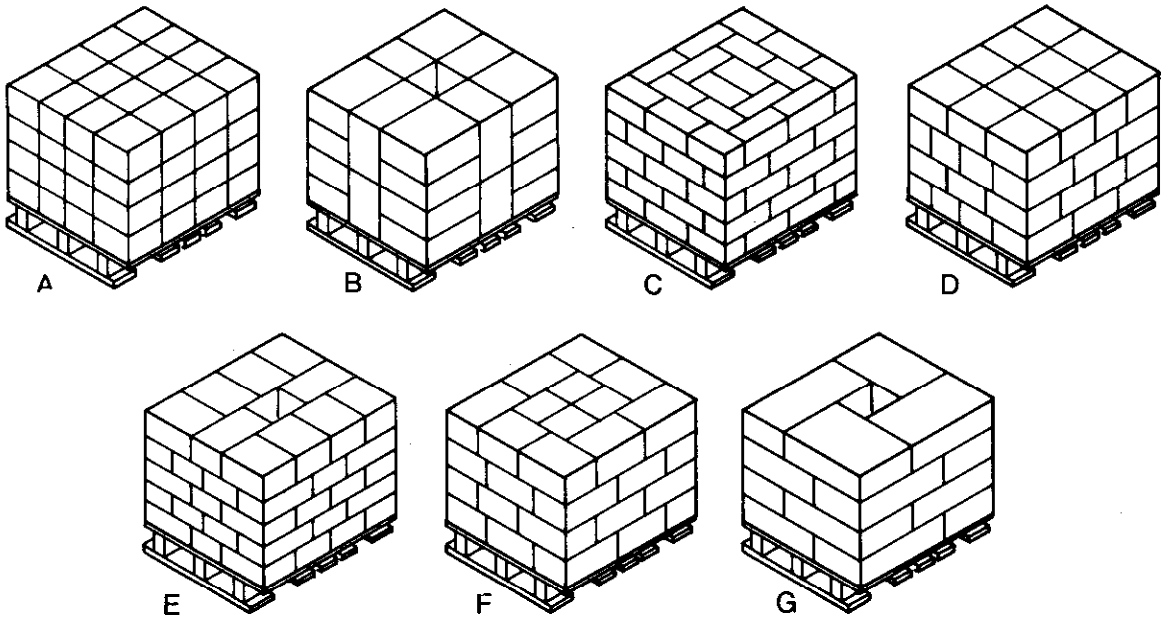

Figure 1.—Various case stacking patterns: A. Block, B. split Block, C. Brick, D. row, E. split row, F. pinwheel (nonvoid), and G. pinwheel (void). (M86 5116)

This standard contains an extensive table for total interior heights, ranging from 1,880 mm to 3,861 mm (74 in to 152 in); these are subdivided into the standardized unit-load heights to obtain the maximum percentage of total interior height utilization. Also contained in the appendix of this standard are average density of various cargos and average weight of unit loads at various heights for these cargos.

Unitizing Machines

The oldest method of unitizing was simply to stack the boxes on a base (either a pallet or slipsheet), using hand labor. Semiautomatic unitizing machines were soon developed in response to the need for higher productivity and lower labor costs. Unitizing machines have been improved through the years so that today they are fully automatic and can handle either pallets or slipsheets or even unitize without a base support. They have programmable solid-state controls, have box-size and unit-load-size changeover capabilities, and can handle a wide variety of stacking patterns and unit-load heights.

For slower lines, semiautomatic unitizing machines are usually the most cost-effective. The range is wide: the simplest models simply turn the load base to allow the operators to stack cases without walking around the base: the most complex only require the operator to push cases into the correct pattern, and the unitizer then lifts the layer and places it on the base. Automatic unitizers are made by many manufacturers: an example (fig. 2) illustrates how one functions. The sealed cases are automatically fed in and are oriented to a preprogrammed pattern. When one row has been formed, the cases move forward. The next row is formed and moved forward, and so on until me layer is complete and the loading plate is filled. The completed layer is then lifted to the height of the existing stack and moved into position just above the stack. The loading plate is then retracted, and the cases are allowed to settle row by row on top of the stack. The load is squared by a squaring bar which also assures complete unloading of the loading plate. The loading plate then returns to its starting position where another accumulated load is ready.

Automatic unitizers can be furnished with automatic dispensers of pallets or slipsheets and automatic dispensers of tier (tie) sheets. An automatic strapper can be built into the machine or the unitized load may be sent to another station where the load is strapped or shrink wrapped or stretch wrapped for load stabilization. Sometimes an adhesive applicator is mounted on the top of the feed conveyor line to apply an adhesive to each case just before unitizing. Unitizers are made with right- or left-hand infeeds and with discharges either to the right or left or at right angles to the infeed.

The speed of a unitizer is dictated by the number of cases per layer, the number of layers per load, and the type, size, and weight of the case being handled. High-speed lines usually have one unitizer on each line. Sometimes, on slower lines, one unitizer can serve two or more lines when sufficient conveyors, switches, stops, and electrical controls are used along with tier and stacking patterns that can be accommodated by the unitizer controls. While this reduces the cost of the unitizing equipment, it increases the cost of conveyors and storage space. In selecting a unitizer. it is best to work directly with the manufacturers of this type of equipment.

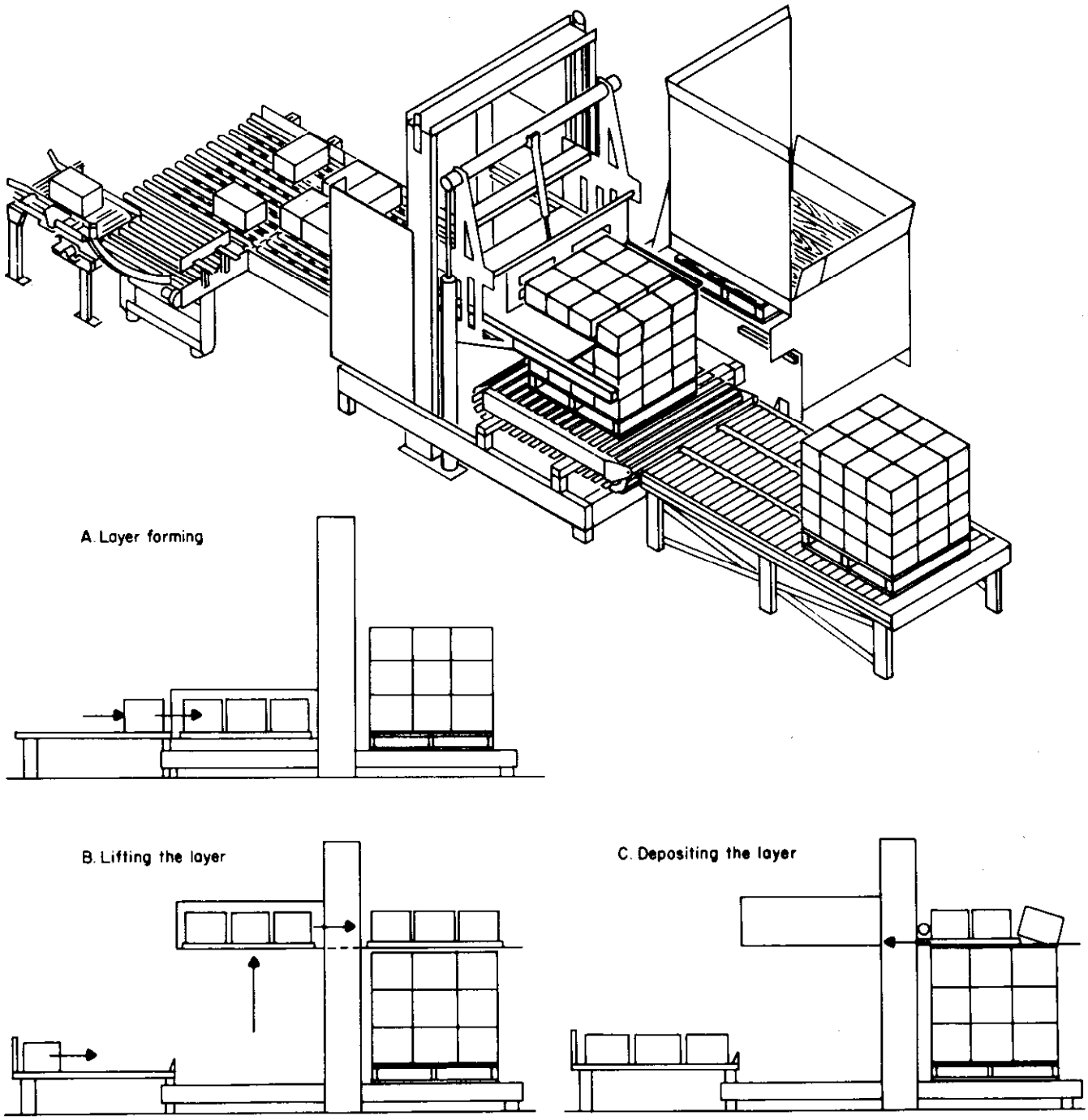

Figure 2.—Typical automatic unitizer and its operation: A. Layer forming. Sealed shipping cases feed in and are oriented to the preprogrammed pattern. When one row is formed, the cases move forward. The next row forms and moves forward, and so on until the layer is complete and the loading plate is filled. B. Lifting the layer. The layer is lifted to the height of the existing stack. The filled loading plate moves into position just above the stack. C. Depositing the layer. The loading plate retracts, allowing the cases to settle, row by row onto the top of the stack. The load is squared by a squaring bar which also assures complete unloading. The loading plate returns to starting position where another accumulated load is ready. (M86 5117)

Several techniques are commonly used to minimize or prevent movement of the individual units making up a unitized load. Each offers advantages and disadvantages.

Antiskid Treatment

Most unitized loads rely on friction between layers to resist slip; antiskid treatments simply increase the coefficient of friction between the packages. Antiskid treatment may be applied to the packaging container material during manufacture or as an adhesive coating on the tilled containers.

For corrugated boxes, friction materials suspended in water can be deposited on the paperboard at the corrugator. Inks or varnishes with antiskid additives can be applied during printing. In all cases of surface treatment with antiskid materials, the improvement in the coefficient of friction is limited by the characteristics of the materials rather than by the amount applied. Improvement is also limited because dust or other contaminants, falling on the container prior to stacking, tend to reduce or eliminate the antiskid properties. Also, disturbance of the antiskid surface during shipping and handling between manufacturer and end user has a tendency to reduce the effectiveness of the preapplied antiskid treatment.

A better approach is to apply an antiskid coating after the containers have been filled and sealed. Adhesives used as antiskid coating (cold glues or hotmelts) are known as breakaway or soft seal, meaning they have significantly lower adhesive properties than similar materials used for package sealing. They resist shear forces but can be broken away by a pulling force.

Cold glues may be applied by air- or airless-spray methods or by extrusion. The amount of glue deposited on the package is critical. Too little adds an insufficient resistance to slip. Too much may cause fiber tear. Also, because glue is usually spread over a wide area, the appearance of the package and sometimes its integrity may suffer substantially.

Hotmelt adhesives are the newest method of adding antislip properties to packages after sealing. A relatively small amount of hotmelt can significantly improve resistance to slip and costs less than cold glue despite the higher unit price. ‘Also, the possibility of package damage from fiber tear is minimized or eliminated.

Hotmelt offers better performance than other adhesives because it operates on different principles. It functions to increase skid resistance two ways: first, the adhesive used is relatively soft and tacky after it has cooled-it has a high coefficient of friction. Second, hotmelt is deposited in a bead which has a significant height (4.2-6.3 mm (1/6-1/4 in)) which makes a mechanical interlock where the meeting surface is slightly deformed by the weight of the package.

The thickness of the bead also insures adhesive contact even if the packages are somewhat uneven. Exact location and length of beads are best determined by experimentation under actual operating conditions. Short beads at four corners of boxes and single elongated beads across the center of bags (either longitudinally or crosswise) are generally best. When the hotmelts cool, they do not seal each case to each other but provide enough friction only to prevent the cases from slipping in the stack.

When corrugated boxes make up the load, applying hotmett on the top two or three layers of a six-tier load is usually adequate. Hotmelts are normally not applied to the top tier.

In automatic systems, a carton or bag is conveyed under one or more automatic guns triggered by a solenoid valve in response to a sensor located at the conveyor. Depending upon the carton size, a pair of guns each firing a single bead or multiple-cartridge automatic guns with suitable spacing are used to deposit the adhesive beads,

The bead pattern is essentially a bead-gap-bead. The sequence is activated by a sensing device and consists of a timed deposition of hotmelt. a delay (gap), and a second time-measured deposit.

Strapping[3]

Whereas antiskid treatment merely diminishes the tendency of cases to slip in the stack, strapping provides a positive means of retaining cases in place.

Strapping Tools

By strapping with handtools, product retention can be achieved without a large capital expenditure for automatic equipment. The single most significant feature of hand-strapping tools is their portability. Many use only hand labor and are low enough in cost for multiple sets to be located throughout a plant or warehouse as needed.

Handtools for tensioning and sealing straps come in a variety of styles and sizes for virtually all kinds of strap. Some are designed for light-duty applications, others for medium- or heavy-duty applications. Applying heavy steel strapping with handtools is difficult but, if dictated by the small number of loads or the need for mobility, may be the only way to do the job economically. A typical hand-strapping sequence is shown in figure 3.

Hand-strapping does not always mean low volumes. Often loads do not lend themselves to automatic strapping, but the number of loads may be large. In these circumstances, air-powered or electrically powered sealers or combination tools are used.

---

[3]The discussion on hand-strapping equipment is excerpted, with permission, from copyright of *Material Handiling Engineering* (1981).

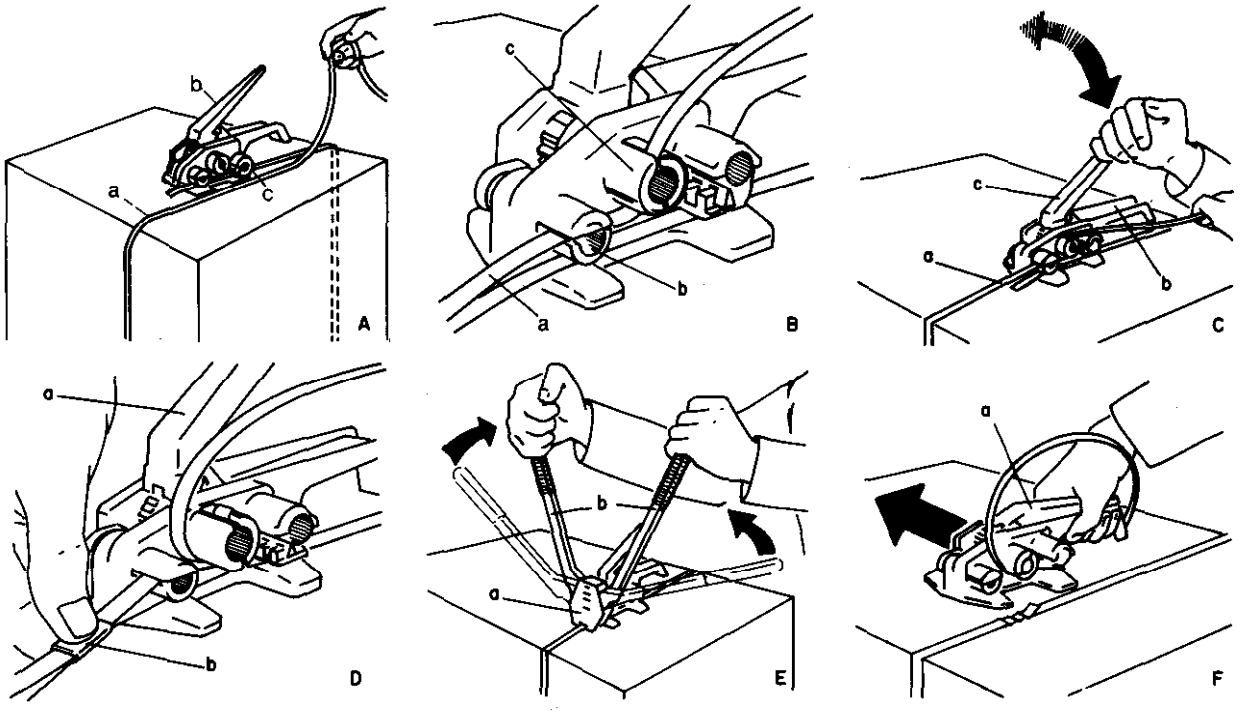

Figure 3.—Typical hand-strapping sequence. A. Place strap (a) around the load. Press tensioning handle (b) fully downwards, thus raising the back clamp (c). Slide strap between the front plate and the bottom section of cutter drum, and between the center plate and the back clamp (c). Leave approximately 3 inches of strap protruding from the front end of the tool. Release the tension handle (b). B. Slide the top strap (a) through the cutter slot (b), and the tensioning drum slot (c). C. Guiding the strap (a) and tool (b), ratchet the tensioning handle (c) forwards and backwards until the correct tension is achieved DO NOT pull the tensioning handle fully back against the grip holder (b). D. Place the grip handle (a) in the rest position and fit an open seal (b) over the top and bottom straps. (When using a closed seal, the seal must be placed on the strap before step A.) E. Open the crimp sealer (a) and crimp the seal by placing the jaws of the tool over the seal and pushing the handles together. F. Squeeze the tensioning handle (a) fully against the housing grip, thus cutting the strap at the seal. Open the clamp and slide the tool away from the strap. (ML86 5118)

Fully automatic strapping equipment is also available. This equipment can be installed directly on the unitizer or used separately as the next station in the line. Various types of automatic strapping equipment (fig. 4) can be used to apply either horizontal or vertical straps.

***Strap tensioners.*—These** fall into four categories: the feed wheel, push, windlass, and special purpose types (fig. 5). The feed wheel type uses a knurled wheel to grip the strap and move it through the seal before crimping. The push type is used for tensioning straps around irregular shapes and in applications where me load is not compressible. The distinguishing feature of me push type is that there is no base or shoe under the strap as with the feed wheel or windlass types.

The most basic type of strap tensioner is the windlass type (fig. 5B). A split capstan accepts the strap, and moving the tensioning ratchet lever turns the capstan to tension the strap. If a buckle is used, as on soft nonmetallic strap, the tensioner simply pulls the strap through the buckle where the strap returning on itself holds it tight.

Where steel strapping is used, the tensioner holds one end of the strap while tensioning the other by winding it around the capstan or moving it between gripper bars. When the desired tension is achieved, a metal seal is placed over the double thickness of strap, and a sealing tool is used to secure the seal to the strap.

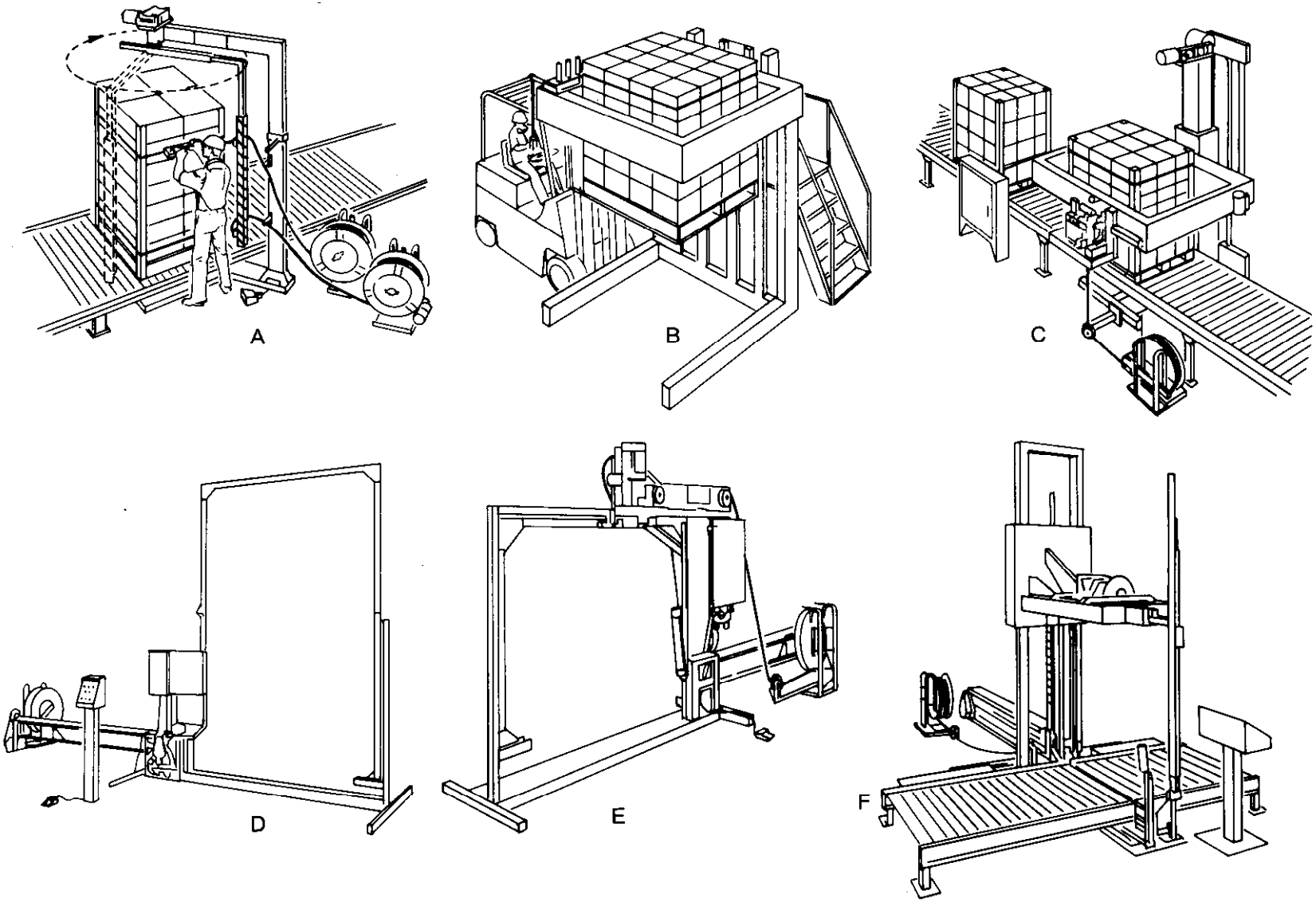

Figure 4.—Automatic strapping equipment. A, B, C. Unitizing with horizontal straps; D, E, F. Unitizing with vertical straps. (ML86 5119)

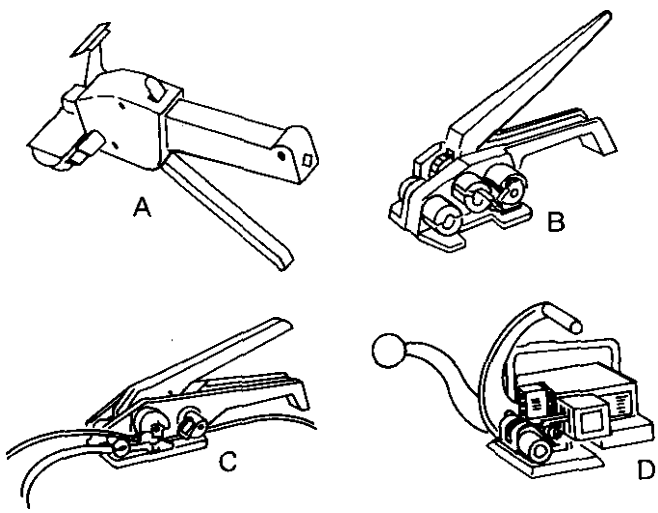

Figure 5.—Various hand-strapping tensioners: A. push type, B. windless type, C. feed wheel type D. special purpose. (ML86 5120)

Sealers for steel strapping.—Where metal seals are applied to steel strapping, the action of the sealers is either to crimp or notch the seal. This sealing action may be single notch, single reverse notch, double notch, double reverse notch, single crimp, or double crimp. Each of these sealing actions is done with a different type of tool (e.g., fig. 6A and B), and more than one style of tool may be available for each sealing action. Steel strap sealers are available for strap widths 9.5-50.8 mm (3/8-2 in). Handle length is varied to give better lever action for the larger seals and heavier straps and for notching instead of crimping.

Sealers for nonmetaltic strapping.—Nonmetallic strapping ends are held by a crimped metal seal, a heat seal, or a wire or plastic buckle. Nonmetallic strap is usually crimp-sealed by flattening, the seal having a rough interior surface, or by placing waves in it so that the strap is pressed firmly against itself in a friction grip against the seal and facing-strap surfaces.

Heat sealing of nonmetallic strap results when the sealer (or combination tool) rubs the strap surfaces against each other so that the friction causes heat and thus makes a seal. This type of friction seal can be removed easily by hand by turning the strap over and peeling off the back strap end. This kind of seal is only used in conjunction with specific types of strap. There are other kinds of heat sealers that actually melt the strap.

Combination tools.—Hand-powered combination tensioning and seating tools (fig. 6C and D) use a lever action to pull the strap tight and then another lever either to crimp or notch the seal while the ends are held. Electrically powered tensioners work in the same manner but use powered knurled wheels to grip and tension the strap.

Powered tensioners and sealers, still in the handtool category, are used for continuous production in areas where the loads are not uniform or where the need is infrequent. They are also used where straps must be applied fast and with greater tension or more uniformity than is usually possible with nonpowered handtools.

Strapping Materials

Strap.—There is great variety in both steel and nonmetallic strapping. In steel strap, the range of widths is 9.6-50.8 mm (3/8-2 in) and the range of thicknesses is 1.6-2.5 mm (0.065-0.1 in). The strap may be wound in flat or ribbon coils or in wide mill-wound coils. Lengths vary according to type and thickness. Round-end, precut-to-length straps are also available with a tolerance of ±12.7 mm (±1/2 in).

Steel strapping can be ordered with slightly curved edges to avoid snagging. Finishes for steel strap include low-friction coating, black-painted and waxed, black-painted and dry, waxed only, zinc-finished waxed, galvanized, or printed throughout the length with a message.

Nonmetallic strap comes in 6.3-15.9 mm (1/4-5/8 in) widths in a variety of colors or printed with a message. Coils are mill-wound to about 5,486 m (18,000 ft) per coil and come in dispenser boxes or with fiberboard cores ready to be placed in a permanent dispenser.

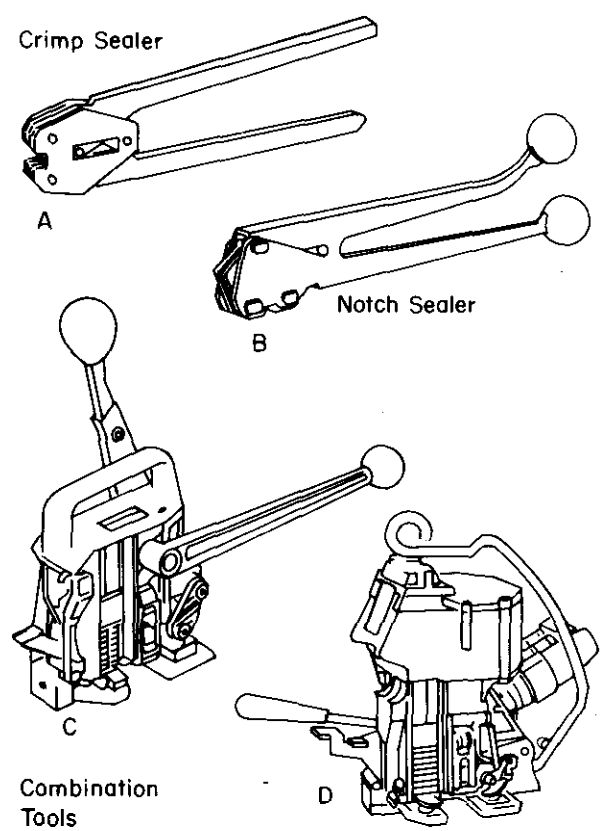

Figure 6.—Examples of A. crimp sealer, B. notch sealer, C. D. combination tools for strapping. (ML86 5121)

Nonmetallic strap may be of polypropylene, polyethylene, nylon, rayon cord, or one of several proprietary plastic compositions. Each exhibits specific properties under tension and ambient conditions, as well as in relation to the load being secured.

Buckles.— Buckles for hand tensioning and light windlass tensioning of flexible nonmetallic strap are made of bent-tempered wire or molded plastic. Plastic buckles are sometimes easier to use because they thread more quickly than their wire counterparts. Buckles are available for nonmetallic strap of widths: 6.3, 12.7, or 15.9 mm (1/4, 1/2, or 5/8 in). These are sometimes called self-sealing buckles.

Seals.—There are many basic kinds of seals, namely snap-on, open flange, push, thread-on. and open types for metallic strapping (fig. 7). and open seal, closed seal, double seal, combination tool seal, and heat seal for nonmetallic strapping.

- Push-type seals (fig. 7A) are fully closed and thread onto the strap before tensioning. They are used where strap is tensioned by using a push-type tensioner.
- Snap-on seals (fig. 7B) are placed over the overlapping strap ends during or after tensioning.
- Open-flange seals are a heavy-duty version of the snap-on seal and eliminate prethreading.
- Thread-on seals (fig. 7C) are slipped over the strap ends before tensioning and are generally used on bales, bundles, and on narrow surfaces.
- Intersection seals are a cross shape and are used where straps cross at right angles to each other. They are used primarily to prevent strap shift.
- Special seals (fig. 7D) with punched ears that remain after crimping can be nailed to the surface of a wood crate or box to prevent strap shift or to take extra abuse in shipping very heavy loads such as castings.

Seals for nonmetallic strap often have a roughened interior so that, when the seal is crimped into a wave pattern, the strap ends are held securely by the gripping action of the seal as well as the way in which it is distorted.

Miscellaneous Strapping Equipment

Balancers.— Powered sealers and combination tools can be handled more easily with less operator fatigue if they are suspended from a balancer. The balancer keeps the tool out of the way yet allows it to be brought into operation quickly and positioned easily. There are literally dozens of configurations of tool holders and balancing methods to present powered tools at the most advantageous orientation to the load being strapped. Tool balancers and counterweighted jib arrangements are available for fixed point, beam, and overhead monorail mounting.

Dispensers.—Many styles of strapping dispensers are available for millwound coils in fixed-mounting and portable styles for both plant and yard applications (fig. 8). Dispenser attachments feed off and brake the roll of strapping to prevent overrun and tangles. Reel carts with tool trays and casters hold rolls of steel or nonmetallic strap and carry all handtools with them around the plant.

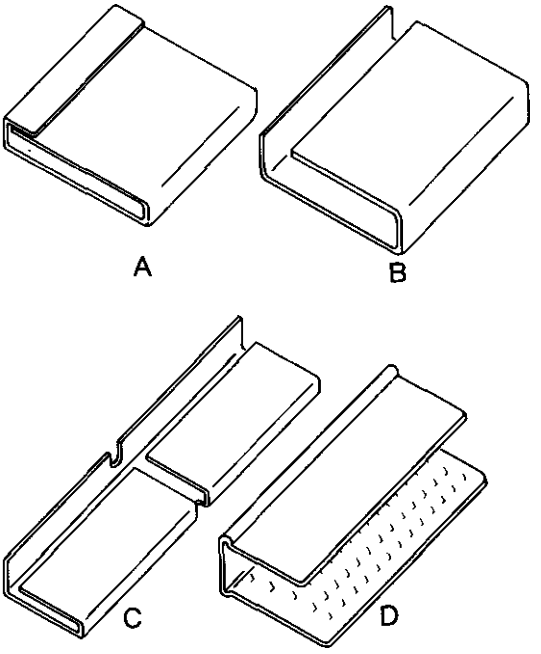

Figure 7.—Various strapping seals: A. push type, B. snap-on or open-flange type, C. thread-on type, D. special type. (ML86 5122)

Corner protectors.—Metal or plastic corner protectors in various sizes keep strapping from cutting into the edges of the loads. For wider support and more protection, angles of solid or corrugated fiberboard protect the package from strap cutting and distribute the holding force of the strap.

Strap cutters.—These range from simple tin or aviation snips to designs that slip easily under tightly embedded strap and those that cut the ends of heavy, wide (50.8 mm (2 in)) strap with safety. Some cutters hold the strap ends so that the released strap will not fly out of control and injure the operator. Many cutters have replaceable blades.

Shrink Wrapping[4]

Shrink wrapping involves the use of thermoplastic films that have been stretched or oriented during manufacture and have the property of shrinking with the application of heat. The idea of taking advantage of the shrink properties of films originated in France in 1936 with the use of natural latex to package perishable foods. During World War II, Dow Chemical Co. developed a family of vinylidene chloride/vinyl chloride copolymer films that were used to protect strategic armaments against moisture. In 1946 a joint development effort by Dow Chemical Co. and the Dewey and Almy Chemical Co. led ultimately to the Cryovac process which entailed prepackaging under vacuum in bags shrunk in hot water. During the 1950's. oriented polyvinyl chloride (PVC) and polypropylene were developed and hot air replaced hot water for shrinking.

[4]The discussions on shrink, stretch, and net wrapping are excerpted, with permission, from copyright of Cahners Publishing Company (1985).

In the early 1980's, flexible packaging with shrink films gained popularity as a display-packaging technique for a variety of consumer products. The process continued to make gains through the later 1960's as its applications expanded to include load unitization.

Unitizing with shrink film entails, first, wrapping the load, and then heating the film to shrink it about the load. Films vary in their quality, and selection of film depends on the manner of wrapping and shrinking. A load may be wrapped by dropping a bag or sleeve of film over it or by encircling it with a broad web from the side. Heat sources for shrinking vary from hand-held heat cannons, with a static load or, perhaps, one rotating on a turntable, to a fully automatic conveyor belt system with continuous heat tunnel. Selection depends much on the type and the number of loads and the floor space and investment available for unitizing.

Shrink-Wrapping Film

Production.— The methods of film production developed during the early years remain much the same today. Extrusion is the most common method, and either annular dies or slot dies may be employed, depending on the materials used and the subsequent methods of orientation. Calendering is sometimes used to produce PVC films. A third method, casting from a polymer solution. is also used for PVC but even less frequently. Both of the latter processes normally yield film with better thickness distribution than extruded film, but the capital investment for calendering or casting is high and, for the solution cast process, operating costs are almost prohibitive.

Orientation.— Shrink film is oriented by stretching the polymer sheet or tube at a temperature above its softening point whereby the polymer chains are aligned in the direction of stretch. After stretching the polymer alignment is locked in the film by cooling.

When the oriented film is subsequently heated to temperatures in the vicinity of the softening temperature, the frozen-in shrinkage stresses become effective and the film shrinks, reflecting strains and stresses related to the degree of orientation and the forces applied during stretching. This orientation can significantly change some of the basic properties of a polymer.

Generally, orientation improves tensile strength, impact strength, and clarity at both ambient and low temperatures. The degree of shrink and shrink energy derive from the orientation process. In certain cases, gas and moisture permeabilities are lowered. On the other hand, orientation generally has a detrimental effect on elongation, flexibility, ease of tear propagation, and sealability of a film, and the heat-sealing range is narrowed.

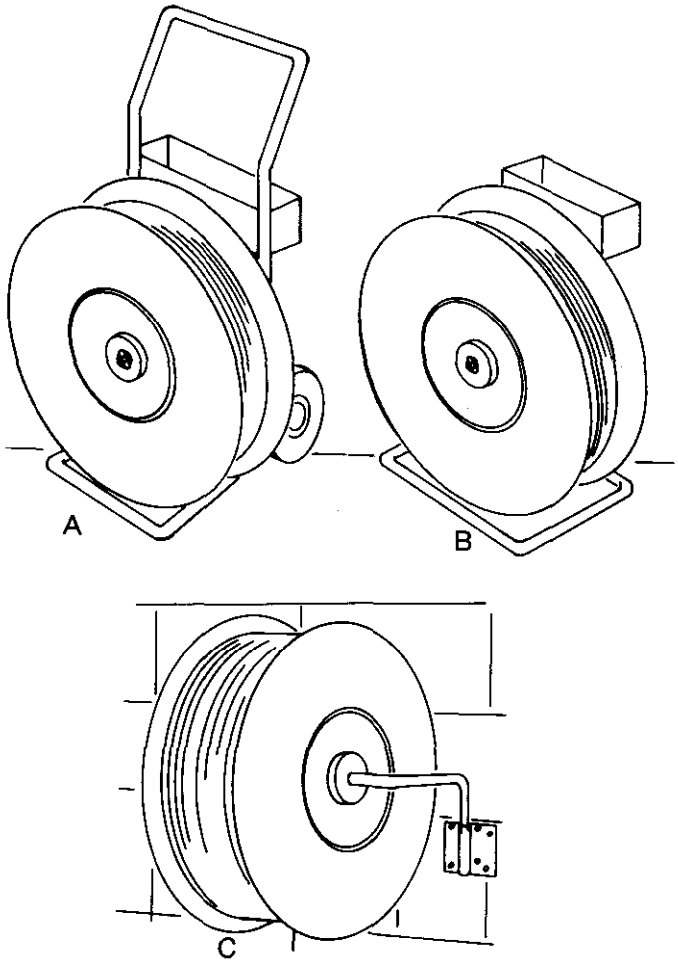

Figure 6.—Various strap dispensers: A. portable, B. heavy-duty free standing, C. wall-mounted (ML86 5123)

Shrinkage.—The shrinkage property of a film is determined by the degree of stretch imparted to it during orientation. The slope of the shrink-versus temperature curve also depends to a certain extent on composition and manufacturing techniques and differs for different polymers. The amount of shrink of commercial films varies from 15 to 80 percent. For most applications, balanced shrink in both the longitudinal and transverse direction is preferred (biaxial orientation), and most films available today are biaxially oriented. Some applications, such as sleeve wrap bundling, can be handled more effectively using a film with unbalanced or preferential shrinkage because shrink in one direction is all that is needed.

Shrink temperatures.—Shrink temperature range is also a consideration. For different films, shrink temperatures vary from 65 °C to 177 °C (150 °F to 350 °F). For example. polyvinyl chloride shrinks at temperatures 65 °C 149 °C (150 °F to 300 °F) while polypropylene requires a temperature of about 166 °C (330 °F) to obtain adequate shrinkage. There are some films with excellent heat tolerance that can be overheated or repeatedly heated and allowed to shrink in several stages without loss of the originally available, stored shrink energy. This broad heat tolerance allows great flexibility in setting the temperature and air velocity of the shrink tunnel. However, films which have shrinking and melting points close together require precise control of temperature and air velocity to give satisfactory results. A good operating principle is to use the minimum of heat and time necessary for sufficient shrinkage.

Shrink tensions.—Shrink tensions range from below 345 kPa (50 lb/in^2) to well above 6,895 kPa (1,000 Ib/in^2). Shrink tensions are calculated on the basis of film cross-sectional area. Some tension, between 345 and 1,034 kPa (50 to 150 lb/in^2), is usually desirable to provide a tight load after shrinking. Intermediate tensions of 689 to 1,379 kPa (100 to 200 lb/.in^2) are usually needed when packaging soft goods. Higher tension up to 3,447 kPa (500 lb/in^2) is desirable for applications in which the film becomes a structural part of the package. Generally, when using films with tensions greater than 2,068 kPa (300 Ib/in^2), care must be used to limit shrink temperature and time to prevent crushing or distorting the load.

Wrapping for shrink.—Placing bags manually over the load is the simplest method of wrapping a load. In some operations, the bags can be fed from a reel and drawn over the load (fig. 9). An alternative approach is to wind film from a reel around the load by turning the load on a turntable (fig. 10) or using a pass-through system which forms a vertical sleeve (fig. 11).

Figure 9.—Placing a shrink bag over a unitized load. (ML86 5124)

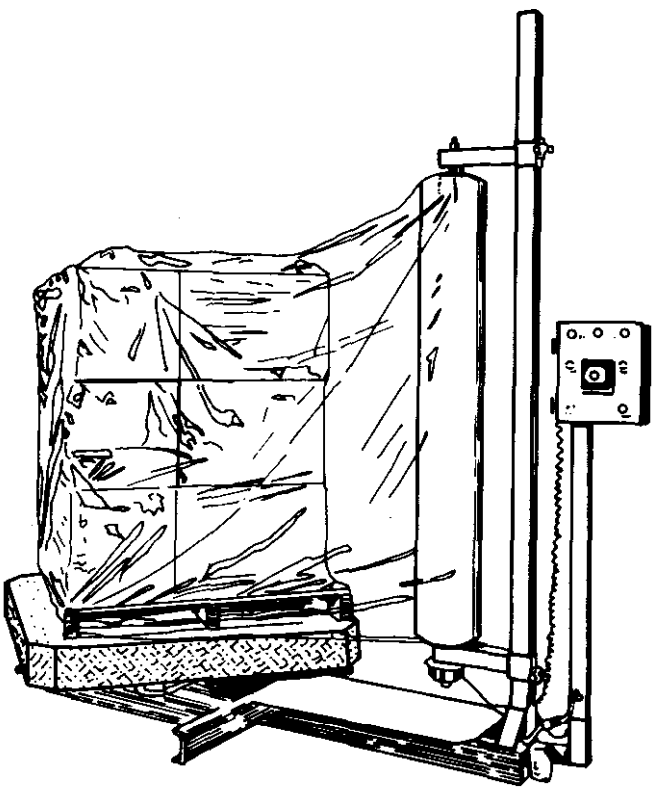

Figure 10.—Applying shrink wrap with a turntable (ML86 5125)

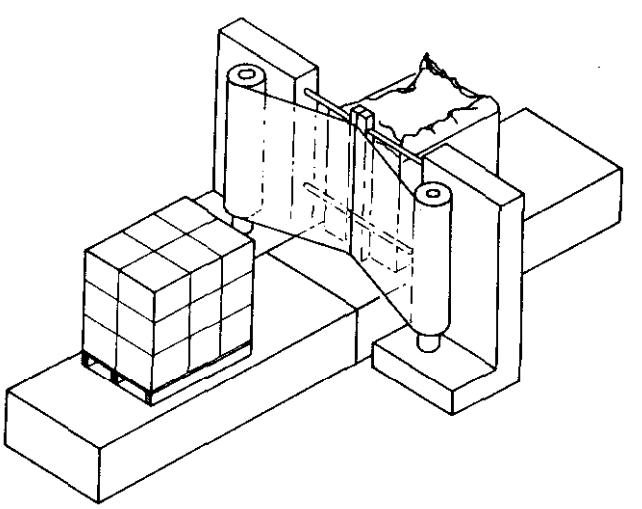

Figure 11.—Applying shrink wrap in a passthrough system. (ML86 5126)

Shrink Equipment

***Portable heat* cannon.—**The hand-held portable heat cannon (fig. 12) is the smallest piece of equipment available, least costly, and most economical to operate. It is designed, however, for sample load preparation and limited quantity production. Hand-shrunk loads are not as good as machine-shrunk loads in shipping performance.

When the gas-powered heat cannon (fig. 12A) is used continuously, propane gas consumption is approximately 4 pounds per hour. With intermittent usage, a 35-pound gas cylinder will shrink approximately 90 loads.

Specific procedures for safe operation include using the heat cannon in well-ventilated areas, checking for leaks on hose connections with soap solution, purging before startup to remove residual gas, and shutting off gas first at the cylinder, to remove gas from hose.

Time required to shrink-wrap a load varies; a film thickness of 0.076 mm (0.003 in) is shrunk in approximately 5 minutes while a film thickness of 0.152 mm (0.006 in) takes 15 to 20 minutes. Extreme care must be used in handling either the gas or electrically operated unit because discharge nozzle temperatures can reach 538 °C (1,000 °F).

In shrinking, the heat should be directed initially at the load bottom to lock the film underneath all edges and comers (fig. 13). Heat application should continue from the bottom up, shrinking one side at a time. Film on the top should be shrunk last. It is best not to dwell in one place too long or film will melt and form burn-holes. Such holes are easy to patch, however, by fusing a piece of film over the hole. With center-fold bags, the ears should be tucked manually and sealed before shrinking is begun at the bottom. This prevents film pulldown as sides are shrunk.

Ring heaters.—Ring types of equipment use gas or electric heat sources contained within a square or rectangular framework (fig. 14). The heat sources shrink all four load sides as it passes over the load. Units have a safety shutdown in case an object contacts the unit on its vertical travel. Cycle time varies with film gauge, unit-load size, and type of film.

Most commonly, the shrink unit moves downward at a fast rate, dwells at the bottom, shrinking film under the load, then finishes the shrinking as the unit moves upward. Slight ballooning that can occur at the load top usually disappears as the film cools.

Shrinking can also start at the load top, proceed downward, with a final dwell at the bottom. This eliminates ballooning. However, because film shrinks vertically as heat descends, biaxially oriented film must be approximately 127 mm (5 in) longer to achieve a bottom lock. Another way is for shrinking to begin part way down, with dwell at the bottom and completion of the shrinking as the frame comes up. This method also prevents ballooning and it should be considered when using film with high vertical shrink.

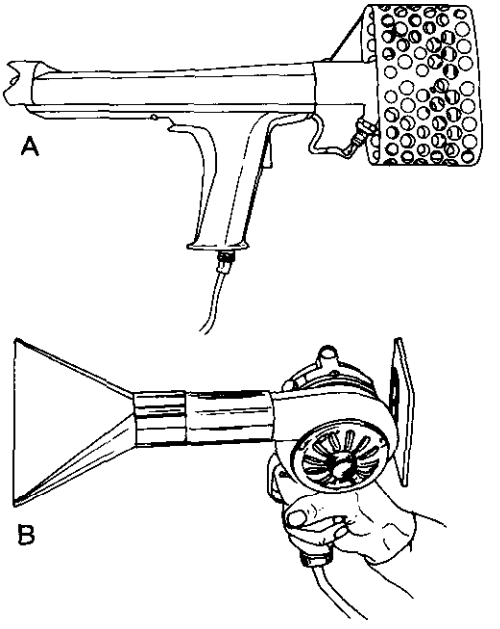

Figure 12.—Typical hand tools for applying heat to shrink wrap: A. gas-operated, B. electric. (ML86 5127)

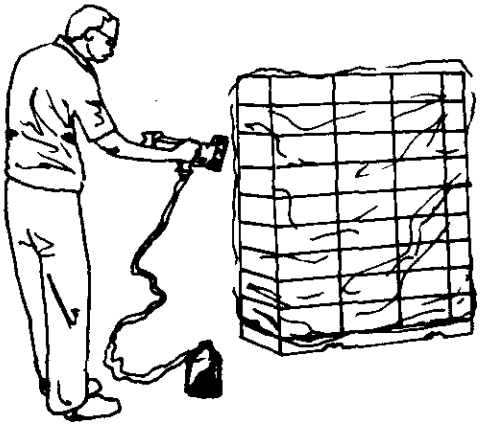

Figure 13.—Shrink wrapping with a hand tool. (ML86 5128)

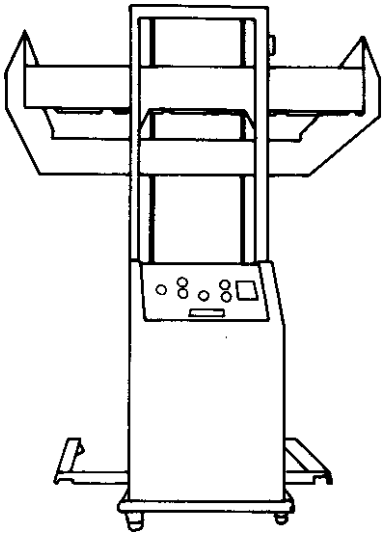

Figure 14.—Radiant ring-type equipment for applying heat to shrink-wrapped loads. (ML86 5129)

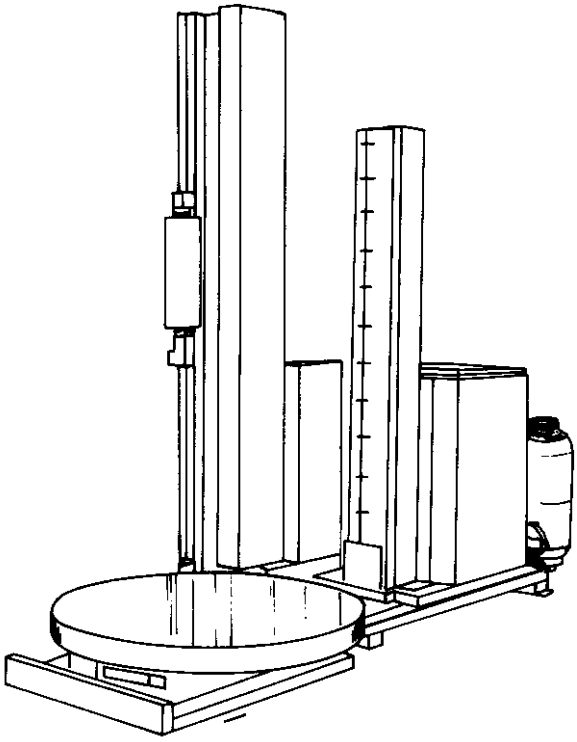

Figure 15.—Rotary tower for applying shrink wrap and heat for shrinking. (ML86 5130)

Rotary towers.—Rotary towers (fig. 15) use electrically heated hot air to shrink the film as it passes in front of the heat source. A complete installation consists of a tower, rotating table, and vertical film stand. The load rotates 360°, wrapping itself in film which is taped to the load. The film is then cut, and its trailing edge attached with tape or adhesive. The unit again rotates 360°, as hot air blows against the film. During this cycle, a cam rolls against the load to maintain uniform distance from the heat source.

A rotary units major advantages are its low floor-space requirement, low power consumption, lower shrink temperature, and low installation cost. Since the heat source follows the load contour at a fixed distance, optimum performance is obtained with straight-sided loads in a draft-free area. Because of its low temperature and openness, this unit is used for safety advantages when shrink-wrapping more hazardous products.

Stationary or movable chambers.—The stationary chamber (fig. 16A) consists of heat chamber or oven with a single door for entrance and exit and a conveyor or movable platform. The movable chamber (fig. 16B) moves vertically over a prepositioned load. Oven-operating temperatures depend upon film type and thickness and desired dwelltime. Once established, these variables are automatically controlled with thermostats and timers. In operation, the covered load goes on a conveyor or platform and automatically feeds either into the stationary chamber or into position for the movable chamber. Following a preset dwell cycle, the load discharges. Final shrink occurs during cooling.

Loads of nonuniform size are handled more effectively with a chamber than with shrink rings. However, since units enter and leave on the same conveyor or platform, production rates are lower than on double-door intermittent or continuous tunnels. Chambers can be heated either with gas or electricity.

Establishment of a time-temperature relationship for a given type and thickness of film is a key factor in efficient operation. Load inspection will show areas where airflow should be changed to eliminate direct hot-air blasts that can cause burn-through or to redirect airflow where no shrinking occurs because of poor circulation.

Available safety controls cover ignition failure or flameout, high temperature, high or low gas pressure, and low airflow. An internal safety shutoff switch which completely shuts down the system is desirable, as are internal lights and safety-glass windows.

Intermittent tunnels.—Intermittent tunnels (fig. 17) have operating characteristics similar to the chamber except in feed mechanisms and production rates. This equipment permits higher production rates because it is a conveyor-fad, straight-through operation. Purchase price and installation costs are higher than for chambers, and additional floor space is necessary.

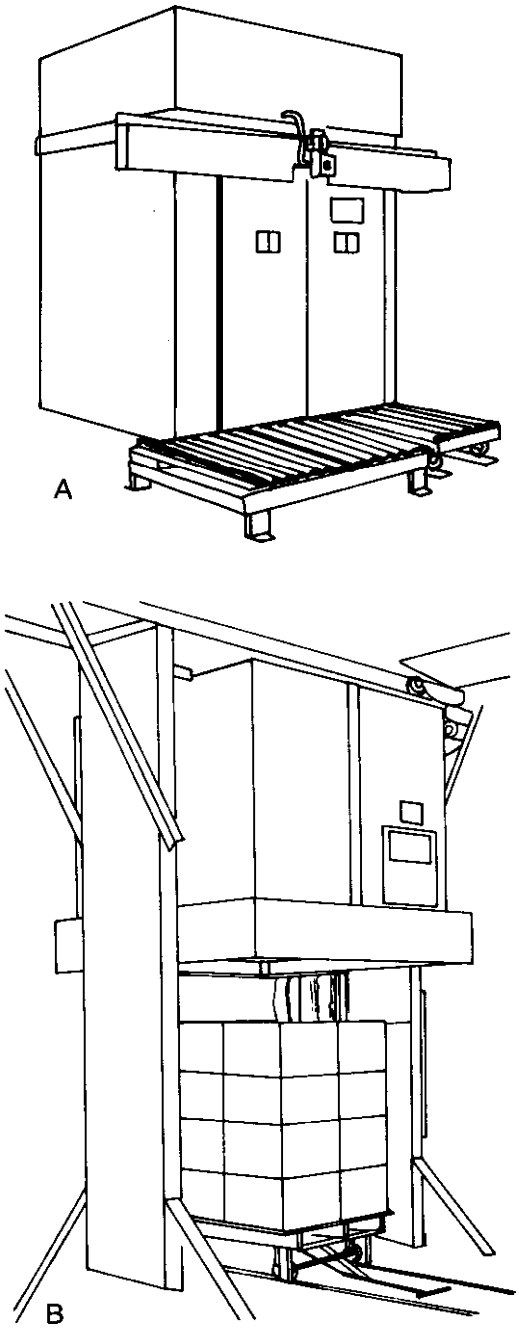

Figure 16.—Chambers for applying heat to shrink-wrapped loads: A. stationary B. moveable. (ML86 5131)

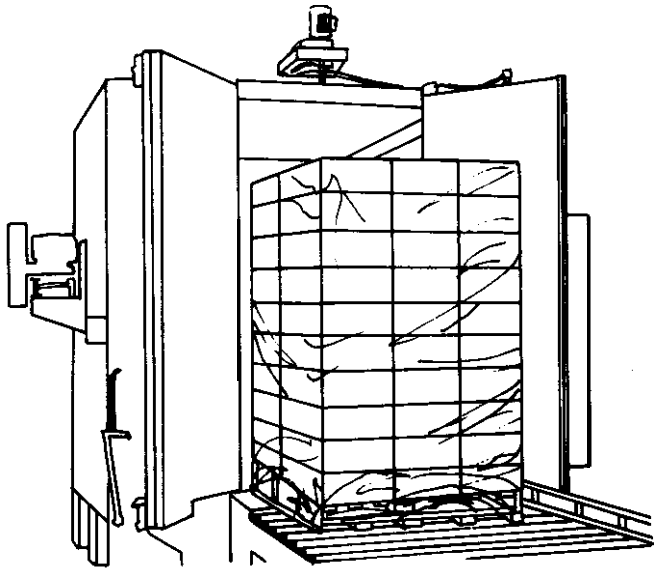

Figure 17.—Tunnel for applying heat to shrink-wrapped loads (ML86 5132)

Continuous tunnels.—These operate similarly to intermittent tunnels except the unit load does not stop during the heat cycle. Tunnel and conveyor are longer, permitting the load to continue moving while the film heats, thus providing increased production rates. Additional floor space is necessary, and investment costs are higher.

Stretch Wrapping

In stretch wrapping, an elastic film is stretched and wrapped around a load to maintain load integrity or provide product protection.

Important considerations in stretch wrapping are performance requirements and how best to meet them through a suitable choice of film and stretch method. These requirements in turn, together with the load or product configuration and the output level, influence the choice of equipment, Consideration of loading and feeding system and amount of automation is vital to efficient, economical operation.

Stretch-Wrapping Films

Currently, several types of stretch films are being used. The greatest usage involves polyvinyl chloride (PVC), low-density polyethylene (LDPE), ethylene vinyl acetate copolymers (EVA), and linear low-density polyethylene (LLDPE). Final performance of stretch films made from each of these materials varies depending on the material used and the conditions of film manufacture.

Polyvinyl chloride.—PVC was first introduced as a stretch film in the early 1970's; it is characterized by good stretch, excellent cling, good toughness, but poor stress retention.

Low-density polyethylene.—LDPE film was introduced shortly after PVC. Although LDPE is the most inexpensive stretch film available, its use is declining because of the superior properties of the newer EVA and LLDPE films.

Ethylene vinyl acetate copolymers—EVA copolymer stretch film was introduced in the mid-1970's. Cling, stretch, toughness, and stress retention of this material are generally very good to excellent.

Linear low-density polyethylene.—LLDPE stretch films first appeared in 1979 and have the highest overall performance and largest market acceptance of any currently being used. Cling is very good to excellent and all other properties are excellent.

Stretch Film Properties

The following properties relate directly to a film's ability to maintain load integrity during storage and shipping.

Cling.—Film-to-film cling (tack) describes the ability of a film to stick to itself. It is affected by many external variables such as humidity and dust. There are two primary ways of obtaining cling in film: to produce a smooth glossy surface which readily adheres to itself, and to add cling additives which migrate to the surface of the film and create a wetting effect at the film interface, enhancing cling.

Stiffness.—Film stiffness also affects cling, since a stiffer film tends to have less of a deadfold quality and wants to spring away from close contact with itself. Film stiffness is primarily determined by the material type and density, film thickness, temperature, and additives used.

Toughness.-Toughness is a term which combines the puncture resistance and tear propagation resistance of a film. It is the ability of a film to elongate and resist punctures and tears.

Resistance to tear propagation.—This is defined as the resistance to the propagation of a tear that has been initiated by puncturing the film under tension. It should be noted that resistance to tear propagation is critical in the cross-machine direction of the film. If the film propagates a tear in the cross-machine direction, it can come completely off the load. Conversely, if the film propagates a tear in the machine direction (the direction of the wrap), load integrity can still be maintained.

Stretch.—Stretch is the ability of a film to elongate when a pulling force is applied. Increased stretch in the machine direction is gained at a loss in final-applied film thickness and width.

Although it is advantageous to have a high machine-direction stretch, more stretch is not always better. As stretch increases, neckdown, tear propagation, and force on the load increases while film thickness decreases. Some stretch-wrap equipment isolates stretch from the load and is designed to enable films to be used at higher stretch levels while minimizing neckdown and load crushing.

Stress retention.—Stress retention is the capacity of a film to maintain the tension applied during stretch wrapping. All films start to relax as soon as they have been stretched, with most of the relaxation occurring within 24 hours.

Films stretched to 130 percent of their original length and allowed to relax for 16 hours typically have a stress retention of 60 to 65 percent for EVA, LDPE, and LLDPE films, and 25 percent for PVC films. Related to this property is the so-called rubberband effect which is the ability to contain a load which settles or shifts during storage and shipment,

Usable stretch.-Usable stretch is the maximum stretch at which a film can be used for a given application while maintaining the other necessary characteristics of toughness, load retention, unitization, etc. The usable stretch of a film can vary from application to application. Of course, the higher the usable stretch, the less film required per load, and thus the lower the cost of unitization.

Other properties such as optics and heat sealability may be of importance for specific applications.

Choosing the Right Film

Other factors should be considered along with film properties when selecting the right film for a specific application.

Shape of the load.—This is a key factor in film selection. The economics of various film types change substantially with various load shapes. A film that adequately unitizes and protects a regular load with rounded corners may not necessarily be the minimum-cost film for an application involving irregularly shaped loads with sharp protrusions, Even regularly shaped loads which are recessed from the corners of a pallet can change the type of film needed. The newer method of isolating the stretching from wrapping equipment makes load shape less important than it used to be.

Load-to-load uniformity.—This affects the selection of appropriate width of film and film-dispensing equipment, whether it be full web for uniform loads or spiral wrapping for variable-height loads.

Density and fragility.—These determine how much crushing force can be applied as well as the film type, gauge, and number of wraps required for unitization.

Equipment.— Equipment also affects the choice of film. Newer, faster units demand more from films than earlier units did. Consistently high quality is critical to the satisfactory performance of film on modern equipment. Indeed, all film-wrapping equipment, whether full web, spiral, hand held, or pass-through, affects film performance and should be considered in film selection.

Application of Stretch Wrap

There are two basic methods of stretch wrapping: with a full-web application (as tall as or taller than the load), or with a narrower web (usually 508-762 mm (20-30 in) in width) wrapped around the load spirally or in bands. Spiral wrapping allows the wrap to be patterned so that multiple windings can be overlapped strategically in areas where greatest strength is needed. This can contribute to economical use of film. Also, in some instances, a load needs to be wrapped or banded only partially.

Stretch-bagging employs tubular film that is stretched and pulled down over the load. The sleeve can be left open or the top can be sealed to produce, if desired, a five-sided, weathertight tent. Bags are most suitable for certain loads that, for example, might tear a wraparound film.

Equipment

Reels— The simplest way to apply stretch wrap is with a hand-held unit. This involves either a hand-held reel for spiral wrap (fig. 18A) or a caster-mounted reel for full-web wrapping (fig. 18B). These are for low output. **me** wrap is tucked into the load, and the operator simply walks around the load. A slightly more sophisticated system is one in which the operator remains stationary while activating a turntable to rotate the load (fig. 19).

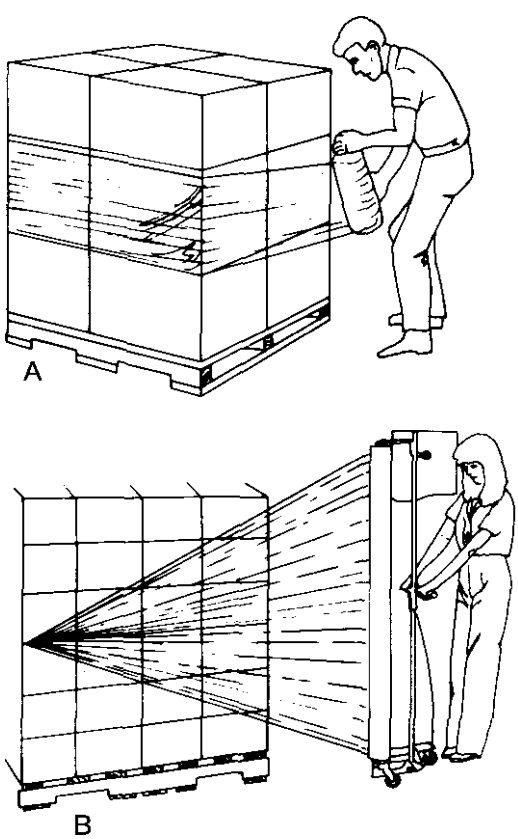

Figure 16.—Hand operated units for applying stretch wrap to palletized loads: A. hand-held reel, B. caster-mounted reel. (ML86 5133)

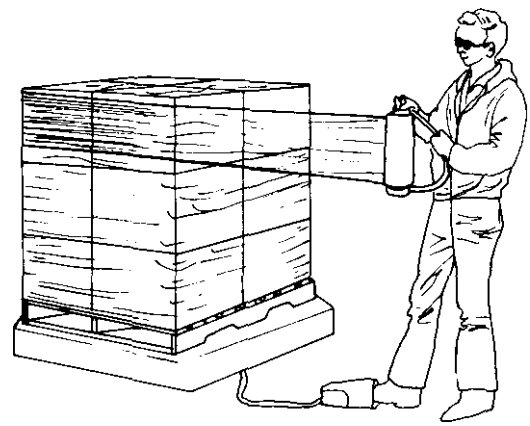

Figure 19.—Hand-held stretch wrapper with foot-controlled turntable. (ML86 5134)

Semiautomatic rotary system.— With semiautomatic rotaries (fig. 20) the load is brought to the platform and indexed into position. An operator starts a preprogrammed cycle and cuts film at the end of the cycle. The load is then removed by truck or conveyor. Special consideration must be given to equipment and methods used to feed the load to the platform and remove it after wrapping, especially when dollies or hand-lift trucks must be used anti when unusual or unstable loads must be handled.

Fully automatic system.— In fully automatic rotary systems (fig. 21), the load is fed into position, wrapped as programmed, and conveyed from the system without operator assistance. With pass-through systems (fig. 22). the load is advanced or ploughed into the web of film, and the film is heat sealed at the front and back of the load. The film is relatively heavy in gauge (0.025 to 0.076 mm (0.001 to 0.003 in)) and stretches about 20 to 35 percent. These systems, available in semiautomatic and automatic models, are generally designed for constant-size loads where high throughput is desired. Various conveyor layouts and methods can be specified. With some pass-through systems the load moves smoothly from powered infeed to powered outfeed with no conveyor gaps to permit the wrapping of nonpalletized loads and slipsheeted loads, as well as pallet loads.

Prestretch

A recent advance has been the development of prestretch methods (for both rotating and pass-through systems) in place of the older frictional-braking stretch method. The braking device generally employs a core, surface control, or tension bar to restrict film unwind. The turning or advance of the load pulls the film against the restrained, tensioned film.

Prestretch may be nonpowered or powered. Both operate on the same principle of stretching the film before (not during) application to load. The purpose is to provide greater stretch levels than can be obtained with braking or frictional methods.

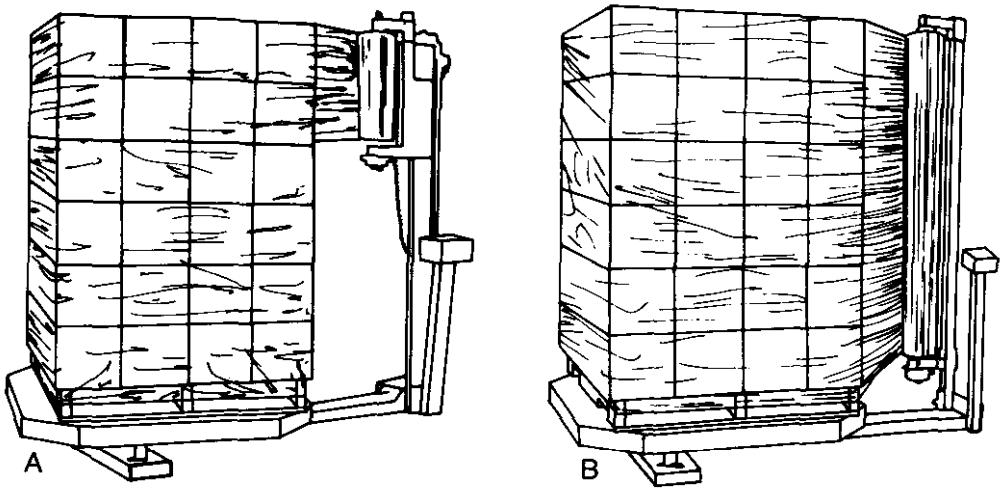

Figure 20.— Semiautomatic rotary systems for applying stretch wrap: A. spiral for random heights or nonuniform loads, B. full width for uniform loads.
(ML86 5135)

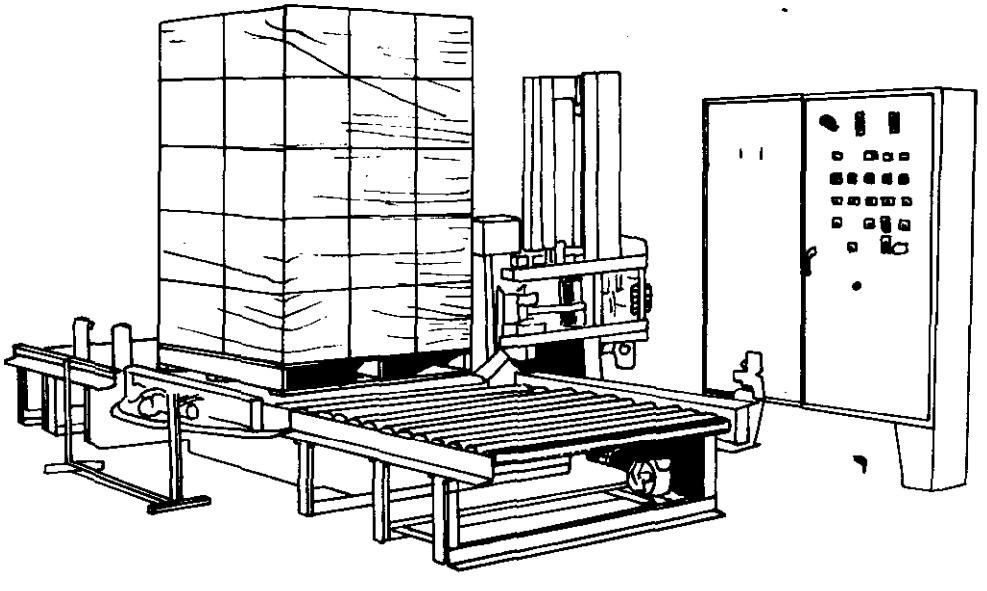

Figure 21.—Fully automatic rotary system for applying stretch wrap
(ML86 5136)

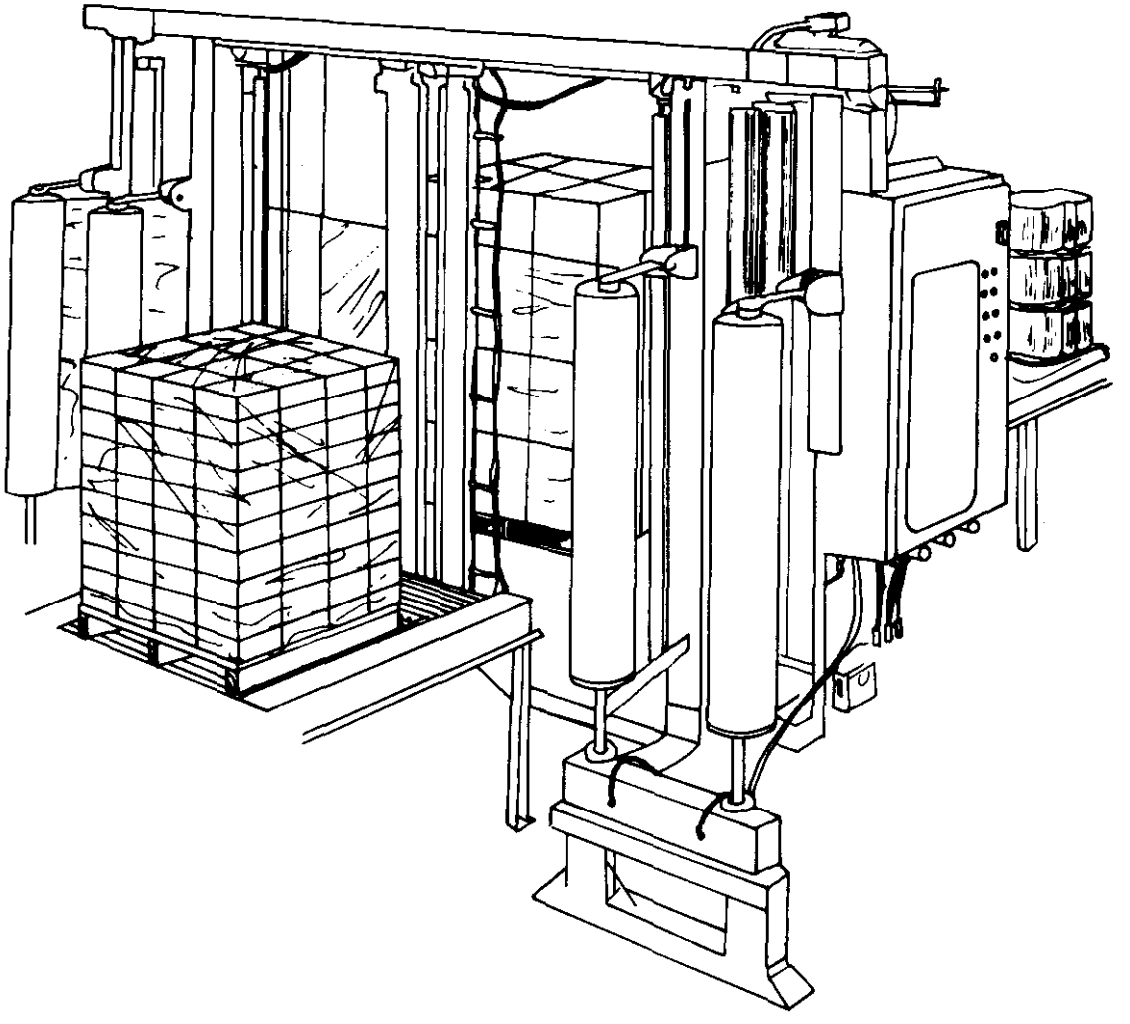

Figure 22.—Fully automatic passthrough system for applying stretch wrap. (ML86 5137)

With prestretch, the objective is greater control of the amount of stretch force applied to the load and the percentage of stretch applied to the film. This in turn can lead to savings in the cost of film for each load-savings, reportedly, as much as 25 to 60 percent, depending on the method used and the extent to which sophisticated electronic controls are employed.

Prestretch has limitations as well as benefits. If the stretching is excessive or improperly done, films can lose cling and can unwrap or become brittle. Prestretch is more satisfactory for loads requiring light tension to avoid crushing. It is less useful for loads requiring heavy tension.

These problems may be only temporary. Film softens and is more easily stretched when warm. Thus, the introduction of heated rolls in tensioning systems, together with improvements in films and in controls, are helping overcome existing stretch-wrapping problems. One system, for example, gathers the final laps of film into a kind of rope, knots it, and applies a metal clip to overcome loss of cling.

When rotating tables turn a load that is rectangular with four corners, film feed must speed up for the comers and then slow down for the sides, causing peaks in film tension and complicating braking operations. The film manufacturers have done much to provide films that perform under these adverse conditions. However, now that turntable speeds are increased to 10 or more revolutions per minute, the problem is magnified and demands attention from both the film manufacturer and machinery manufacturer.

Stretch films tend to relax after they are applied. Where films have been prestretched more than 100 percent they relax significantly more than when prestretched only 20 to 35 percent.

Most films lose cling if prestretched more than 100 percent in certain conditions. To make prestretch more successful, films specially designed for prestretching are being developed in heavier gauge and with improved cling characteristics,

Stretch Netting

In the 1980's, LLDPE, the most popular raw material for the manufacture of stretch film, was used to make netting for load unitization.

LLDPE-based netting gives performance comparable to film but at a lower cost. In one manufacturer's test market, LLDPE netting yielded cost savings to 90 percent of the film users contacted. There is less mass in netting, thus less raw material is required for production. Less material means lower unit cost and simpler disposal of the netting, without compromising strength. Because netting is lighter, it is available in longer rolls than film (3,048 m (10,000 ft)). That means fewer roll changes, reduced down time, and less waste.

Certain netting can be prestretched during manufacture: this delivers a high stretch-to-weight ratio and increased tensile strength in both machine and transverse directions. Joints in the structure of the netting help transmit stress equally. This structure resists the tear propagation often encountered in film. If one strand breaks, adjacent strands do not.

Like film, netting conforms to odd shapes and provides a complete enclosure to discourage and give evidence of pilferage (fig. 23). Load identification is easier with netting because the contents can be seen. Netting is appropriate for all film applications except those requiring complete dust or moisture protection. It is uniquely suited to loads that heed to breathe or to be heated, cooled, wet down, or frozen quickly (fig. 24).

Historically, a road block to acceptance of netting was that the product did not cling like film, so that tie-off was difficult, This problem has been solved by the development of a simple, easy-to-use clip.

Spiral or full-web netting configurations can be used to wrap loads with conventional stretch-wrap equipment. Netting can also be applied with most prestretch equipment. However, because the netting is prestretched during manufacture, prestretch equipment is usually not necessary to obtain the resulting economies.

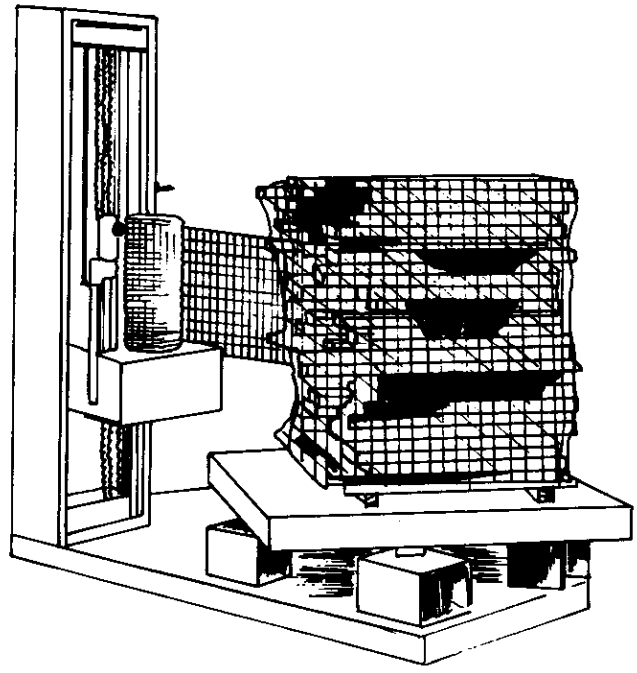

Figure 23.—Stretch net wrapping of odd-sized load using automatic stretch film equipment. (ML86 5138)

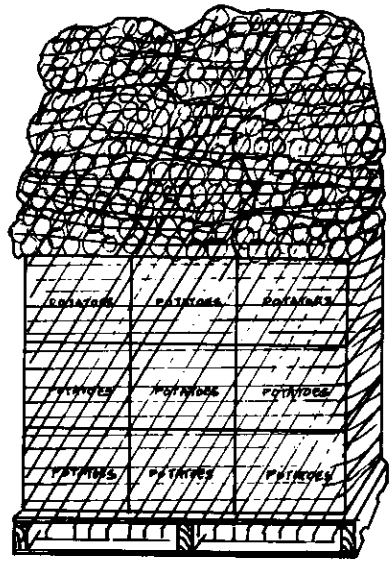

Figure 24.—Stretch net wrapping of products requiring ventilation. (ML86 5139)

Part II
Pallets and Slipsheets

Introduction

Unit-load bases for the most part take the form of lumber pallets. A small fraction of pallets are made of plywood or wood-derived material or, for special purposes, of plastic or steel. Slipsheets are light-weight unit-load bases in the form of flat sheets of solid or corrugated fiberboard or plastic and have their own place in materials handling.

Pallets

Pallets are made in a considerable variety of types, styles, sizes, and composition. Their principal virtue is that they are stiff, relatively inexpensive platforms that can support a wide variety of unit loads during handling, shipment, and storage. They are also used increasingly as captive platforms for temporary storage during shipment. Pallets are relatively simple in design and fabrication. Customarily, the user can select from a considerable variety of kinds, styles, and vendors. The choice depends greatly upon the characteristics of the loads. the handling facilities available during shipment the cost, reusability, and local availability of the pallets, and vendor aggressiveness. Several kinds of pallets exist that can be used for most purposes.

Lumber Pallets

According to a recent estimate of the National Wooden Pallet and Container Association, at least 95 percent of all pallets are manufactured from lumber. Generally, this is from 3A to 3C common grade lumber. The quality of lumber used in pallet manufacture is established by the kinds and sizes of defects present. Knots, checks, splits, and cross grain must be limited to ensure satisfactory performance. The use of low-grade lumber to make pads is acceptable so long as excessive defects are eliminated in the cutting or are located in the finished pallet so as not to impair its assembly, strength, and serviceability.

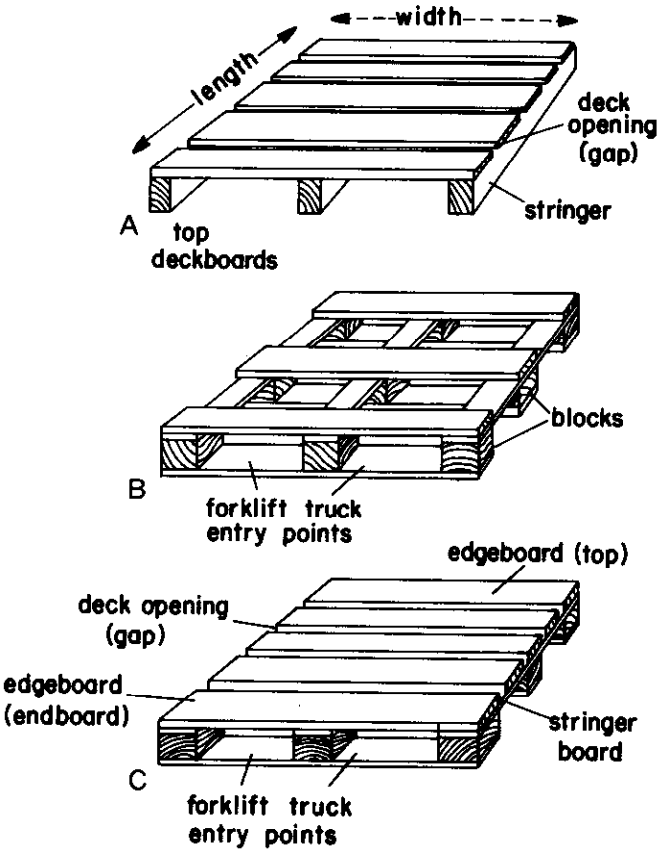

Figure 25.—Expendable pallets: A. no-block type, B. 9-block type with three top deckboards, C. 9-block pallet with five top deckboards. (ML86 5140)

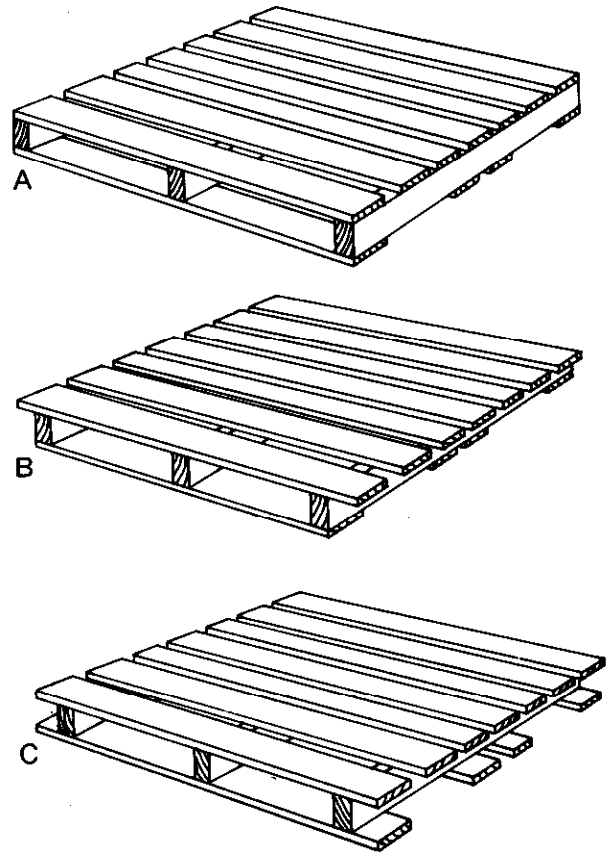

Figure 26.—Two-way entry, general-purpose nonreversible pallets: A. flush-stringer type, B. single-wing type, C. double-wing type. (ML86 5141)

Classification

Pallets are usually classified by use in three general groups: (a) expendable (also called nonreturnable or shipping), (b) general purpose (often called returnable, warehouse, or reusable), and (c) special purpose. Expendable pallets (fig. 25 on which component parts are labeled) are frequently used only for one or few trips. General purpose pallets (fig. 26 and 27) are suitable for continuous service in warehousing and shipping up to 4 years, depending upon the style, use conditions, and various other factors.

The majority of pallet-manufacturing plants make all three general groups of pallets. Others specialize in either expendables or nonexpendables, while a few specialize in producing parts to be assembled into pallets by the user.

Pallets are constructed as either singleface or doubleface units. The singleface (nonreversible) pallets have only a top deck (fig. 25A). They are sometimes referred to in the industry as skids, particularly if they have only two stringers. Doubleface (reversible) pallets have both top and bottom decks. The ends of the deckboards in either style may be flush with the stringers or project beyond them in single- or double-wing constructions (fig. 26). Winged styles are particularly common where overhead hoists with slings are used for loading or unloading as in shipboard transportation.

Pallets of all these types are made to provide either two-way or four-way entry. Entry refers to the number of sides with openings for insertion of material-handling equipment, such as the tines on forklift trucks. Many expendable wood pallets are four-way entry with nine blocks (fig. 25, B and C). A sizable demand also exists for two-way expendable pallets. Another popular design has notched stringers to permit forklift entry in four directions (fig. 27C). This notched stringer-design is referred to as partial four-way entry. One of the most rugged pallet designs is the picture frame style (fig. 28).

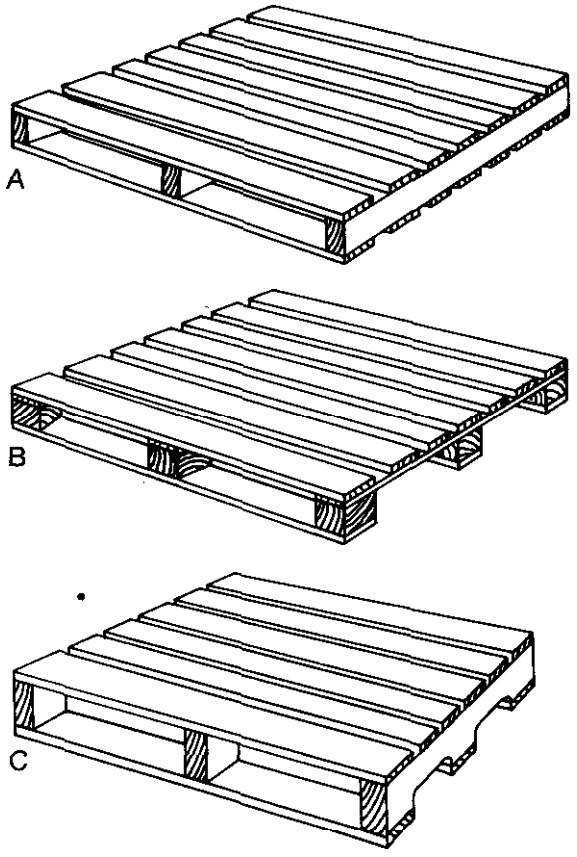

Figure 27.—Three popular designs of lumber pallet: A. two-way entry, reversible pallet, B. block-type four-way nonreversible pallet, C. notched stringer, nonreversible, partial four-way pallet. (ML86 5142)

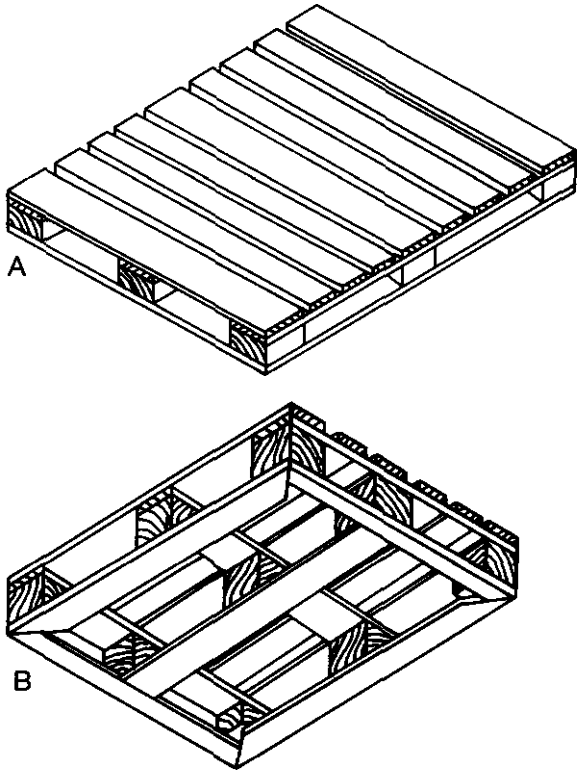

Figure 28.—A picture frame pallet. A. top view, B. bottom view. (ML86 5143)

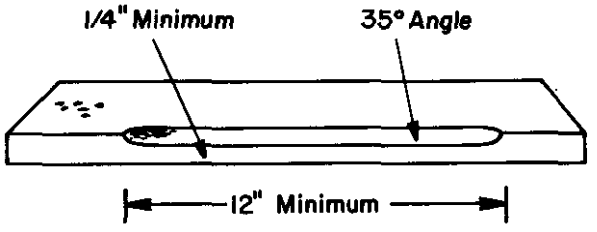

Figure 29.—Properly manufactured chamfer. (ML86 5144)

Occasionally, the lower edge deckboards of pallets are chamfered to allow easier access by handtrucks or other types of trucks with wheeled extensions. These chamfers should be at least 305 mm (12 in) in length and cut at a 35° angle to the major flat faces of the board. This leaves a surface adjacent to the chamfer of not less than 6.4 mm (1/4 in) from the outer edge of the deckboard, as shown in figure 29.

Another style, the bin pallet, has vertical sides to form a box or container (fig. 30). Sometimes bin pallets are equipped with tops, and occasionally one vertical side or part of a side is collapsible or removable so that the pallet may be used as a supply bin.

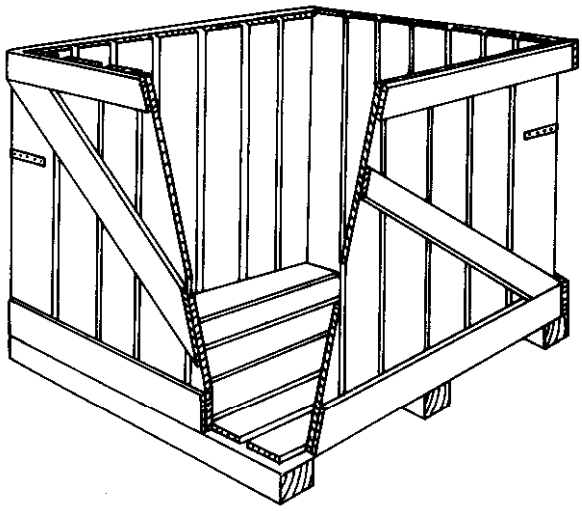

Figure 30.—A typical bin pallet (also called container pallet or box pallet). (ML86 5145)

Sizes

Pallet dimensions vary widely. Generally, lengths range from 610 mm to 1,829 mm (24 in to 72 in). Pallet manufacturers define the first dimension of the pallet size as the length of stringer for two-way entry or partial four-way entry pallets, and as length of stringerboard or subdeckboard in full four-way entry pallets. Currently, the most common pallet size in the United States is 1,219 mm by 1,016 mm (48 in by 40 in) or the inverse, 1,016 mm by 1,219 mm (40 in by 48 in).

Pallet dimensions are often dictated by the interior dimensions of carrier equipment, intermodal containers, package sizes held thereon, and special industrial requirements. No pallet size is common to all industry, but some groups have standardized pallet sizes, and many companies have improved their operating procedures by such standardization. Although the use of a relatively small number of standard pallet and unit-load sizes is necessary to foster reusability and thereby reduce handling and shipping cost, existing investment in differing systems is a formidable obstacle to standardization. Some factors affect both domestic and international shipment of palletized unit loads:

- Incompatability between U.S. customary units (especially for length and width) and metric units.
- Differences between existing vehicles and handling and shipping systems, some of which are geared to U.S. units, others to metric units.
- Differing specifications and standards generated by organizations such as American National Standards Institute (ANSI), American Society for Testing and Materials (ASTM), National Wooden Pallet and Container Association (NWPCA), General Services Administration (GSA), Department of Defense (DOD), and others shown in Appendix B.

Design

Historically, pallet designs have been developed by trial and error using laboratory or field tests to determine acceptance. Designs found to work satisfactorily in one situation have then been recommended by pallet manufacturers or pallet users for other similar situations. While the resulting designs are usually reliable, they are seldom optimal; the pallets are overdesigned for some situations, underdesigned for others. Recognizing a deficiency in design procedures, the National Wooden Pallet and Container Association, in cooperation with Virginia Polytechnic Institute and State University and the USDA Forest Service, have developed a new design procedure based on accepted engineering principles and the latest technologies for designing wood structures.

The new Pallet Design System (PDS) is a series of tables, charts, equations, and program statements which allow use of a small computer. The program contains a reliability-based design procedure starting from engineering fundamentals and results of laboratory and field testing. The computer program is menu-driven and simply asks the designer for the necessary input information. Once this information is provided, the analysis is performed by the computer.

The PDS program is available for the Apple and IBM personal computers. Compiled program diskettes and user guides are available on lease from the National Wooden Pallet and Container Association. For those who choose not to implement their own computer-assisted design system, design assistance based on PDS is available from the Pallet and Container Research Laboratory, Department of Forest Products, Virginia Polytechnic Institute and State University.

Manufacture

Basically, there are two stages to wooden pallet manufacture: first, the cutting of the pallet parts is done by variously equipped sawmills, wherein low-grade material (usually green) is rough sawn and finished as pallet parts; second. the parts are nailed or stapled together as pallets. They are then shipped expeditiously to the buyer and often arrive in nearly green condition. Pallet members are customarily used while green because the lower driving resistance of green wood allows the use of cost-effective nailing machines. Also, less splitting results. However, less fastener tightness and nailhead pull-through resistance accompanies manufacture in the green or near-green condition. Moreover, splitting may occur during subsequent use as the wood dries below the fiber saturation point. For most aspects of pallet manufacture, information about manufacturing equipment and procedures can be found in publications from Eichler Associates (1976), Forest Products Laboratory (1971), Kurtenacker (1969, 1975). and the National Wooden Pallet and Container Association specifications and standards cited in Appendix B.

Moisture Content Requirements and Determination
Most pallet specifications contain specific requirements for the moisture content of the various pallet parts. Requirements vary, often depending on whether the species is hardwood or softwood. Frequently, the dense hardwoods are nailed into pallets at high moisture content to facilitate assembly with automatic-nailing machines. The lower density hardwoods and most softwoods are nailed easily enough regardless of moisture content.

The two recognized methods of determining the moisture content of wood are by drying a sample in an oven and by using an electric moisture meter. Because the moisture content varies within and between boards, a large enough number of tests should be made to obtain a reliable average, which ever method is used. Intelligent selection of test pieces and a suitable number of samples will minimize error.

Detailed procedures for determining moisture content may be found in the Wood Handbook. published by the Forest Products Laboratory (1974).

Trade terms, such as green, shipping dry, air dry, and kiln dried, although widely used, have only general meaning with respect to moisture content, except in a few instances where lumber association rules define moisture content limits for kiln-dried and air-dried lumber. The wide range of moisture contents to which these generally accepted terms may be applied are given in the specifications and standards cited in Appendix B.

Prevention of Decay in Pallets
Regardless of species, decay-resistance is not important for pallets kept at a moisture content of less than 20 percent but is an important factor when pallets are used in unprotected outdoor storage.

Pallets of wood of low decay-resistance, used under conditions that favor decay (as in a warm, wet climate), may last less than 1 year, but the heartwood of some hardwood species may give several years of satisfactory service. If outdoor exposure is less severe, several years of service may be expected from wood of low decay-resistance. Most commercially important hardwood pallet species have moderate or low resistance to decay. In all woods the sapwood has lower decay-resistance than the heartwood.

A water-repellent preservative treatment can be used to advantage for the less durable species.[5] The pallet manufacturer and user may select from various preservatives and methods of application a combination that is best suited to end-use requirements. Some popular preservatives are copper-8-quinolinolate, copper naphthenate, zinc napthenate and polyphase.

Water-repellent preservatives are particularly effective in reducing decay associated with intermittent welting. An effective water-repellent material in the preservative solution also retards moisture changes in the wood but will not prevent them. It helps reduce dimensional changes caused by moisture changes when the wood is exposed to rain, dew, or dampness for a short time.

Caution must be exercised if treated pallets are to be used with or around foodstuffs or other materials susceptible to toxic contamination. The acceptability of preservatives for use in such instances falls under the jurisdiction of the Food and Drug Administration. Currently, copper-8-quinolinolate is the only preservative approved for treatment of pallets if foodstuffs being shipped might make contact with the preservative.

Pallet Wood Members

Intrinsic Wood Properties
Almost all of the native wood species found in the United States can be used and a variety of wood species and materials are actually used to make pallet parts. Although a number of properties are commonly used to represent the nature of wood, few were found to indicate the strength of pallets made from the wood. Pallet bending strength was selected as the single most important characteristic of pallets. The wood modulus of rupture (MOR) when green was selected as the strength rating because of its direct relationship with the failure of pallets just going into service, i.e. in their weakest condition.

The name, specific gravity, and MOR of the woods used more commonly as pallet stock in the United States are tabulated in Appendix C. MOR is given both for green wood and at 12 percent moisture content to illustrate the large effect of moisture on MOR. As shown, there is generally a good correlation between specific gravity and MOR, the higher strength woods also having a higher specific gravity.

Shrinkage and Warping of Wood Members
Wood is dimensionally stable when the moisture content is above the fiber saturation point which for most species is about 30 percent (based on the ovendry weight). Wood changes dimension as it gains or loses moisture from that point. It shrinks when losing moisture from the cell walls and swells when gaining moisture in the cell walls. This shrinking and swelling may result in warping, checking, splitting, or performance problems that detract from the usefulness of the wood. It is important to understand these phenomena and to consider how they may affect a pallet in which wood is used.

[5]See pesticide precautionary statement inside back cover

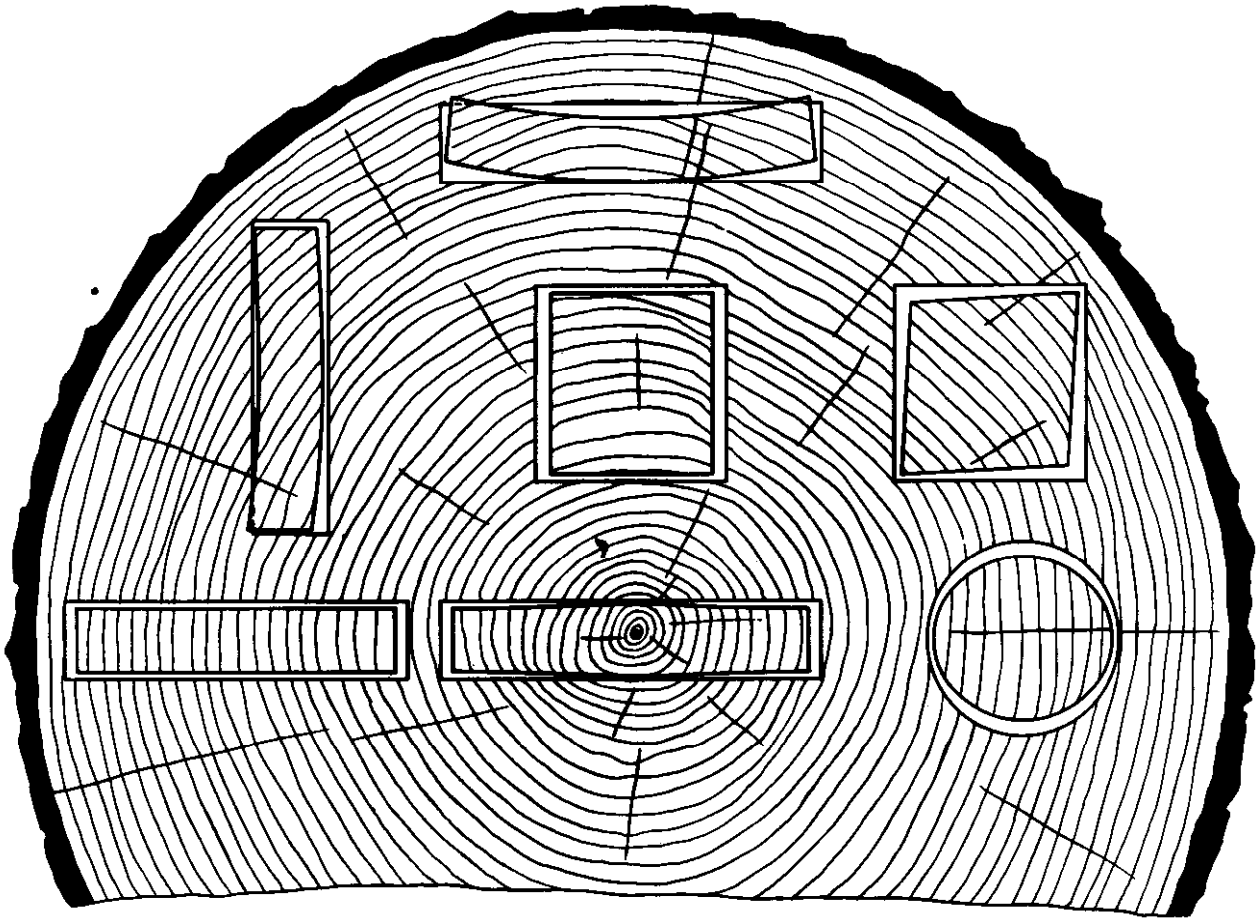

Figure 31.—Characteristic shrinkage and distortion of flats, squares, and rounds as affected by the direction of annual rings. (ZM12 494F)

Wood shrinks most in the direction of the annual growth rings (tangentially), about one-half as much across the rings (radially), and only slightly along the grain (longitudinally). The combined effects of radial and tangential shrinkage can distort the shape of wood pieces because of the difference in shrinkage and the curvature of annual rings. Figure 31 illustrates the major types of distortion from these causes.

Longitudinal shrinkage of wood (shrinkage parallel to the grain) is generally quite small. Average values for green to ovendry shrinkage are between 0.1 and 0.2 percent for most species of wood. Reaction wood, whether compression wood in softwoods or tension wood in hardwoods, tends to shrink excessively along the grain. Wood from near the center of trees (juvenile wood) of some species also shrinks excessively along the grain. Wood with cross grain (see below) exhibits increased shrinkage along the longitudinal axis of the piece.

Reaction wood exhibiting excessive longitudinal shrinkage may occur in the same board with normal wood. The presence of this type of wood, as well as cross-grain wood, can cause serious warping, such as bow, crook, or twist, and cross breaks may develop in the zones of high shrinkage.

Lumber may become crooked, bowed, cupped, or twisted during air seasoning or kiln drying. Crook is deviation edgewise from a straight line from end to end. Cup is a curve across the grain or width of a piece. Deep cup deflection 9.5-12.7 mm (3/8-1/2 in) across a board width of 305 mm (12 in)—or in like proportion for other widths-is never permitted in pallets and is reason for rejection. Twist is a distortion caused by the turning of the edges of a board so that the four comers of any face are no longer in the same plane. Bow or twist in pallet deckboards can usually be straightened by nailing, but nailing the two edges of cupped boards may result in splitting.

Common Wood Defects

Knots.—Knots in pallet lumber are objectionable because distortion and discontinuity of grain surrounds them. This weakens the wood, causes irregular shrinkage, and makes machining more difficult. When lumber dries, knots shrink more than the surrounding wood and may check, loosen, or drop out.

The size of knots permitted in various pallet parts is governed by the proportion of their width to the width of the piece containing them as well as by their location in the finished pallet part. A wide range of knot sizes is acceptable in pallet parts, but me pallet specifications and standards given in Appendix B should be consulted because they outline the restrictions on location and size of permissible knots.

Checks, splits, and shakes.—These are three types of longitudinal cracks that occur in wood. All are acceptable to some degree in pallet parts. Limitations are generally established by the specification documents.

A check is a longitudinal crack, generally in the radial direction (across the annual rings). Checks usually result from shrinkage in seasoning. Thick lumber checks more severely Man thin lumber. A split is a longitudinal crack that extends through the full thickness of a board. It often takes a radial direction and may be called a through check. A shake is a longitudinal crack between two annual rings caused by violent flexing during windstorms or because of heavy snow loading. Shakes are present in green timber, and they may extend during seasoning. They indicate a weakness of bond between annual rings. This weakness may extend lengthwise beyond the visible opening.

Cross grain.—The term cross grain indicates that the wood fibers are not parallel to the length of the board. The two principal types of cross grain are diagonal grain and spiral grain.

Diagonal grain often results from sawing a board at an angle other than parallel with the bark. It is easily detected by noting the slops of the annual rings on an edge-grain or radial surface.

Spiral grain results when the fibers grow spirally around the trunk of a tree instead of vertically. In lumber, it is not always apparent to the eye, but can often be detected by the direction of a split in the radial plane.

The maximum tolerable slope of cross grain in pallet parts varies with the specification involved. For example, the National Wooden Pallet and Container Association specification for hardwood pallets (Appendix B) allows a maximum slope of grain of 25.4 mm (1 in) in 127 mm (5 in).

Pockets.— A bark pocket is a patch of bark partially or wholly enclosed in the wood. This slight separation or lack of cohesion has a definite weakening effect.

Pitch pockets are well-defined openings extending parallel to the annual rings. They may be present in pines, spruces, Douglas-fir, tamarack, and western larch. The effect of such pockets on strength characteristics depends upon their number, size, and location in the board. A board with a large number of pitch pockets indicates a lack of bond between annual growth rings. Such a piece should be inspected for shakes or separations along the grain.

Streaks.— Mineral streaks are dark brown or black streaks, frequently with a green tinge. They vary in length from less than an inch to a foot or more along the grain and at their widest portion may extend from 3.2 mm (1/8 in) to more than 25.4 mm (1 in) across the grain. Their limits may be sharply defined, or they may fade out gradually into the surrounding wood. Mineral streaks are frequently infected by fungus, and they check more easily in seasoning than normal wood. Mineral streaks are common in maple, hickory, basswood. yellow-poplar, and yellow birch and are occasionally found in other hardwoods. The streaks have little effect on strength or other mechanical properties and are not considered objectionable in pallet lumber.

Stain and Decay

Many stains and all forms of decay or rot are caused by fungi that grow on and in wood.

The most common stain is the blue stain or sap stain that occurs in the sapwood of many species. The sapwood is mottled or streaked with a bluish or grayish stain which in advanced stages becomes dark bluegray or almost black. A stain of this type ordinarily does not seriously affect wood strength and is not considered objectionable in pallet lumber. Its presence, however, indicates exposure to conditions that favor the development of decay. Stained pieces should be carefully examined for decay.

Incipient decay usually appears as a discoloration, often in rather irregular streaks or elongated areas having a reddish or brownish tinge. The streaks extend lengthwise in a board but are not limited to certain annual rings, as is the case with most normal color variations in wood. Decay in this stage has only moderate effect on properties important in pallet lumber. Parts with incipient decay should be rejected.

More advanced decay or rot results in a distinct change in color, a soft or brittle texture, a dry or dead appearance, and pronounced crosscracking. Some types of decay produce discolorations in the wood known as zone lines. These are narrow black, orange, or yellow lines of various lengths that tend to run somewhat in the direction of the grain of the wood. They are often more prevalent at or near the border of the most conspicuously discolored areas. Sometimes they border areas only slightly discolored, but their presence is certain evidence of decay.

Decay in any stage seriously reduces the strength and toughness of wood and should be excluded from pallet lumber. Small amounts of decay in knots may tie allowed if specifications permit and if the decay does not extend to adjacent areas outside the knots. Stain and discoloration that are not associated with decay are permitted in pallet construction.

Lumber Manufacturing Defects

Undersized or offsize lumber may result from errors in sawing or surfacing. Specifications or accompanying drawings for pallets usually indicate permissible tolerances in size.

Wane is the presence of bark or lack of wood along one or both edges of boards that are sawed from the outer portion of the tree trunk. Excessive wane could have a serious influence on the strength of pallet parts and might interfere with nailing or other fastener systems.

Lumber may be surfaced on one side (S1S), two sides (S2S). one edge (S1E), two edges (S2E), four sides (S4S), or some combination thereof. Some areas, where dimensions are scant, may not surface smoothly. These areas are known as skips and may be defined and limited by area, depth, or both. A slight skip does not have measurable depth: a shallow skip is one that the planer knife failed to touch by not more than 0.8 mm (1/32 in), and a deep skip by not more than 1.6 mm (1/16 in). The term “hit and miss” describes a series of surfaced areas with skips not more than 1.6-mm (1/16 in) deep. This type of defect is not considered critical in pallets and is permitted.

Where areas of irregular grain occur. a part of the wood may be torn out below the general dressed surface. A depth of torn grain up to 0.8 mm (1/32 in) is classed as slight, up to 1.6 mm (1/16 in) as medium, and up to 3.2 mm (1/8 in) as heavy. A depth up to 1.6 mm (1/16 in) is permitted in pallets. Torn grain may also be limited to a fraction of the face area of a board.

Pallet Fasteners

Nails

Nails are the most common fasteners used for pallets. A properly nailed pallet should utilize the maximum strength of its wood members. Many service or maintenance problems can be traced to use of the wrong number, size, or type of nails in fabrication. Nails may be applied singly with a hammer or with a nailing gun. However, in the manufacture of a considerable number of pallets, the most cost-effective method of construction is to use a preset nailing machine. By this means the entire set of nails for one side of a pallet is driven simultaneously.

Laboratory withdrawal tests show that for heavier members, where clinching is impractical, symmetrically deformed shank nails can develop withdrawal resistance two or three times that of common or coated nails. Helically and annularly threaded nails are particularly effective in pallet construction. Typical kinds of nails used to make different styles of wood pallets are shown in figure 32A through D. The smallest (A) is a fivepenny cement-coated, diamond-pointed nail used to fasten deckboards to subdeckboards in block-type pallets, (B) represents a 63.5 mm by 3.0 mm (2-1/2 in by 0.120 in) helically threaded, hardened pallet nail, again with a diamond point, (C) is a 63.5 mm by 3.0 mm (2-1/2 in by 0.120 in) annularly grooved, hardened, pallet nail, and (D) an 88.9 mm by 3.8 mm (3-1/2 in by 0.148 in) helically threaded, hardened pallet nail. The fastener (E) is a 63.5 mm (2-1/2 in) 15-gauge galvanized, plastic-coated, chisel-pointed staple with a 11.1 mm (7/16 in) crown.

Nails used to fasten deckboards to stringer or posts should be long enough for the portion penetrating the stringer or post to be 2 to 2-1/2 times the thickness of the deckboard. The correct number of nails for each deckboard crossing varies: two nails for material of less than nominal width of 152 mm (6 in), three for a nominal width of 152 mm to 203 mm (6 in to 8 in), and four for material of nominal width of 203 mm (8 in) or wider. To prevent splitting and to provide maximum performance the nails should be staggered. If pallet parts are predrilled to reduce splitting, the lead holes should be about 75 to 80 percent of the outside diameter of the nail shank.

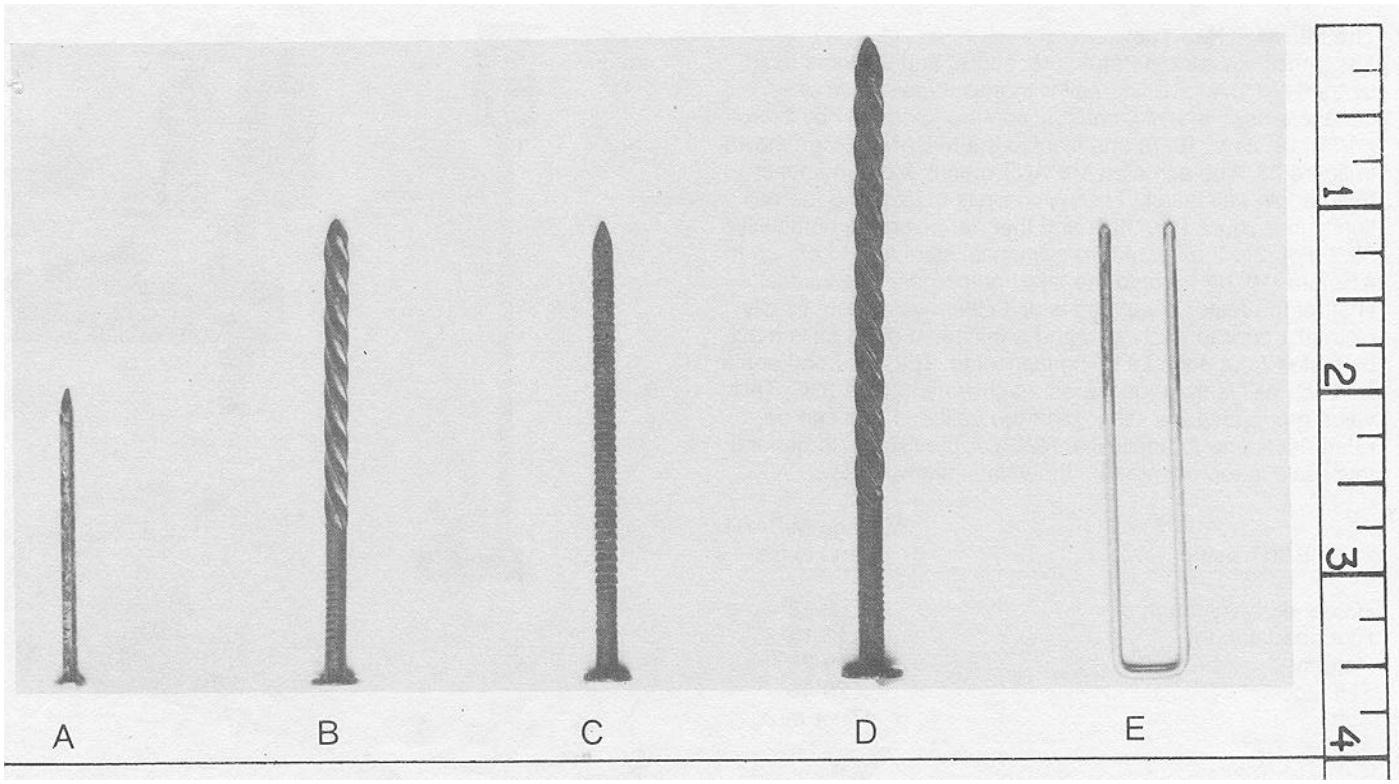

Figure 32.—Some styles and sized of fasteners used in wood pallet construction. A. 5-penny (5d) cement-coated nail, B. 2-1/2-inch helically threaded pallet nail, C. 2-1/2-inch annularly groved pallet nail, D. 3-1/2-inch helically-threaded pallet nail, E. 2-1/2-inch plastic-coated staple. (M153 097)

Excessive overdriving of nails or embedding nail heads in the wood crushes the fibers and reduces the resistance to shear failure and nailhead pullthrough. This condition is more critical with thin boards where the reduction in performance is almost directly proportional to the amount the nail is overdriven. Slight overdriving is usually desirable to reduce the tendency for snagging goods by protruding nailheads. It also tends to compensate for any nailhead protrusion resulting from shrinkage. However, overdriving should not exceed 1.6 mm (1/16 in) in thicker deckboards (nominal 25.4 mm (1 in) or more). If pallets are assembled by use of nailing machines, uniform thickness of pallet parts is necessary to avoid excessive overdriving or underdriving.

For most expendable pallets it is good practice to drive nails through the thinner into the thicker member and, when practical, clinch the nails. Sinker or cement-coated corker nails are used for this purpose. Clinching the nail across the grain is many times more effective than clinching with the grain. Minimum clinch should be 3.2 mm (1/8 in).

Staples

The fastener in figure 32E is a plastic-coated staple used as an alternative to nails. Recent development in driving equipment and the introduction of staples with longer plastic-coated legs have established that similar joint strength can be achieved with staple joints of this type if more staples than nails are used. A rule-of-thumb is that five 63.5 mm (2-1/2 in) staples must be used to equal three standard helically threaded, hardened pallet nails of the same length. One advantage of using staples is that much less splitting occurs in pallet production.

The MIBANT Nail Test

The principal test apparatus, procedure, and systems used by the NWPCA for rating nail withdrawal resistance of fasteners used in pallet construction are described by Stern (1970, 1972a,b, 1973) and involve the MIBANT tester shown in figure 33. The acronym MIBANT means Morgan impact bend-angle nail tester. Testing consists of securing the nail tightly in a chuck (fig. 33B) and then dropping the nominally 88.9 mm (3-1/2 in) standard cylindrical steel head from up to 419 mm (16-1/2 in) onto the head of the nail. The vertical shaft of the tester should be wiped clean with a slightly oily cloth just prior to each test, and a minimum of 25 nails must be tested from each tot being inspected. The nail bend angle for each nail is then measured as shown in figure 33C. This value represents the stiffness of the nailhead and can be rated according to applicable NWPCA provisions. In general, this scale is represented by the values shown below:

MIBANT rating	Average MIBANT bend angle
Hardened, very tough	8-12°
Hardened, tough	13-18°
Hardened	19-28°
Stiff stock	29-46°
Soft	47° or more

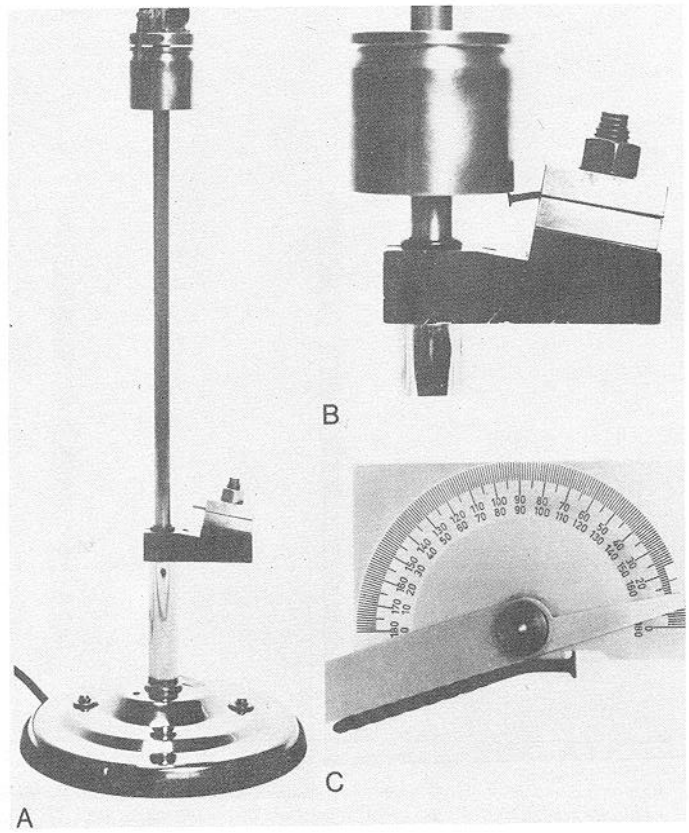

Figure 33.—The MIBANT impact-bending test apparatus for nails: A. overall view of apparatus before testing, B. enlarged view of bent nail after impact, C. measurement of the bending angle to determine nail hardness. (M 153099, M 153102)

Nonlumber Pallets

Plywood Pallets

Softwood plywood pallets enjoy a small portion of the total market for pallets. Various combinations of plywood and softwood and hardwood lumber are used to construct different kinds of so-called "softwood plywood pallets"—the phrase is inaccurate; nevertheless, unless specified otherwise, the top deck is always made of exterior-type plywood, bonded with exterior (fully waterproof) glue.

Plywood pallets are made in combinations of the following designs, styles, and construction.

Designs	styles	Construction
Two-way entry	Single face	Flush stringer
Partial four-way entry	Double face	Single wing
Four-way entry	Reversible	Double wing
	Nonreversible	

For the mutual convenience of pallet users and manufacturers, the following numerical designations have been adopted to express combinations of styles and constructions.

Type 1—Single-face, nonreversible pallet.
Type 2—Double-face, flush stringer or block, nonreversible pallet.
Type 3—Double-face, flush stringer or block, reversible pallet.
Type 4—Double-face, single-wing, nonreversible pallet.
Type 5—Double-face, double-wing, nonreversible pallet.
Type 6—Double face, double wing, reversible pallet.

Advantages.— Softwood plywood pallets show the following advantages over their all-hardwood counterparts of the same style and type:

- Have more dimensional stability for a wide range of ambient moisture contents.
- Give a flatter, more continuous support base for items during shipment and interim storage.
- Have a high strength/weight ratio.
- Have relatively long life and low maintenance cost.

Disavantages.— They have the following disadvantages:

- Cost more by about 30 to 50 percent, depending on conditions.
- Are less available in some areas.
- Are less likely to be returned in noncaptive operations, being more expensive and generally of better quality.
- After repeated loading, the edges of decks tend to splinter during handling and shipment.

Miscellaneous Wood or Wood-Derived Pallets

Unusual articles may best be handled on specially designed pallets. Some are particularly lightweight, but adequately strong for their use. Others are designed to carry unusually large loads. Pallets of this type often have one or more additional stringers, are made from the stiffest wood, and have heavier members and smaller gaps.

Take-it-or-leave-it.—The "take-it-or-leave-it" design (fig. 34) permits the goods to be handled by forkliff trucks, with or without involving the pallets. These pallets are used in operations involving at least one step wherein goods cannot be bundled on pallets, for example in a warehouse where merchandise is shipped without pallets and where their design still permits loading without manual handling.

Paticleboard.— Particleboard pallets (fig. 35) are reusable, nestable, and can be made from chipped wood waste. The nestability feature allows pallets of this type to be stacked in compact columns when not in use. For example, 50 pallets of this type can be stacked in a column height only slightly more than 2,134 mm (84 in).

Paper-overlaid veneer.—Two-way and four-way entry, expendable pallets are also made from paper-overlaid veneer (POV) (fig. 36). The two-way entry pallet (fig. 36A) is made entirely of POV parts, bonded together as shown. The four-way entry design (fig. 36B) in a pallet size 1,219 mm by 1,016 mm (46 in by 40 in) weighs about 4.5 kg (10 lb) and is nestable. Its principal features are a POV base with a POV matching top with lumber deckboards. The parts are stapled together as shown. Pallets of this nature are best suited for handling and shipping lighter loads.

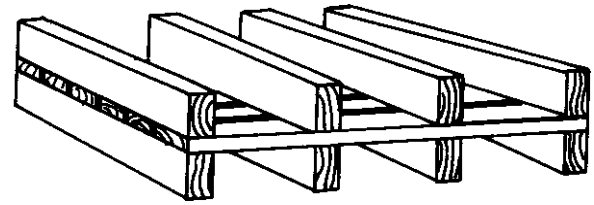

Figure 34.—Typical t&?-it-or-leave-it pallet. (ML86 5146)

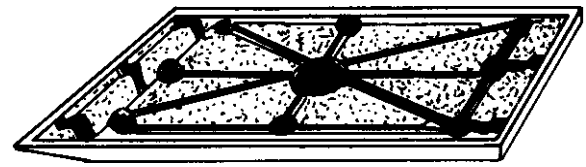

Figure 35.—The particleboard pallet. (ML86 5147)

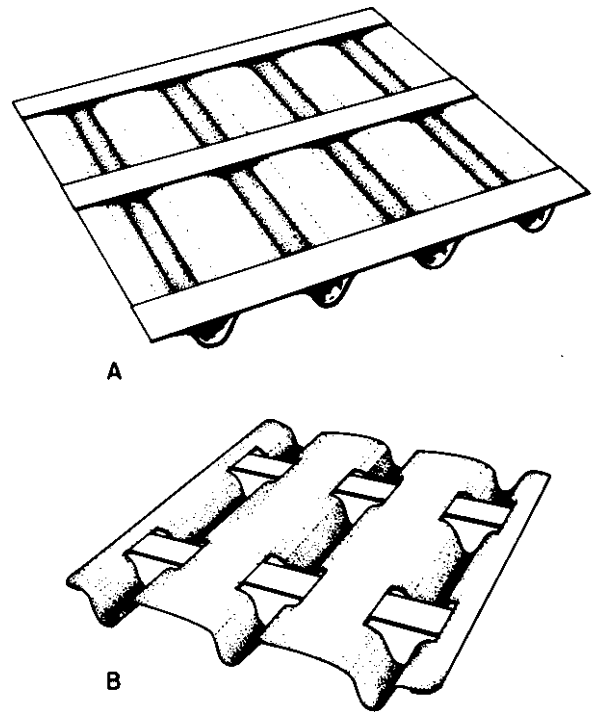

Figure 36.—Expendable, paper-overlaid veneer pallets: A. a two-way entry design, B. a four-way entry, nestable design. (ML86 5148)

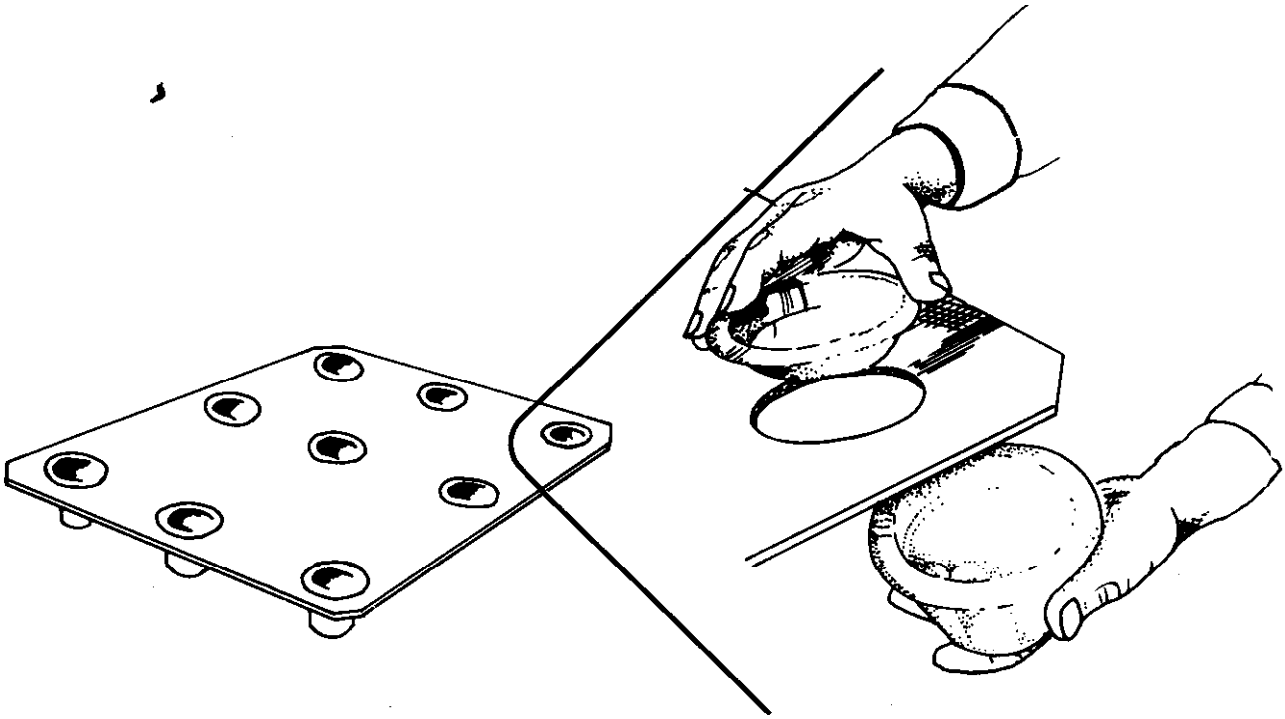

Figure 37.—Corrugated fiberboard pallet with plastic legs. (ML86 5149)

Fiberboard deck with polystyrene legs.—Another type of expendable pallet consists of a wax-treated (if specified), doublewall corrugated fiberboard top deck supported by hollow, conical, high-impact, polystyrene legs, four, five, six, or nine in number depending upon the size of the pallet (fig. 37). According to one company estimate, 100 pallets of this type can be stacked as a column 1,629 mm (64 in) high. Pallet variations are available. Diverse attachments to the tops of the basic pallets are available to enable shipment of particular merchandise. These pallets are inexpensive and are presently being used to ship and store textiles, plastic parts, power tools, switches, stereo equipment, electronic parts, food products, and paper.

Corrugated fiberboard—The corrugated fiberboard pallet is another variation of inexpensive, expendable pallets (fig. 38). Typically, 12.7 mm (1/2 in) triplewall is used to make the decks. Built-up sections of the material also serve as blocks or stringers. Because it is fabricated with glue, the decks remain free from protruding nailheads or staples. Its principal virtues are low cost, a smooth load-bearing surface, and support for loads up to 907 kg (2,000 lb). A disadvantage of the corrugated fiberboard pallet is its sensitivity to moisture, which can significantly reduce performance.

Molded wood chip.—Still another variation of expendable pallet is made of wood chips bonded under heat and pressure with synthetic resins. The basic manufacturing process for molded wood chip pallets can use sawmill and pulping wastes, municipal wood waste, and hogged scrap pallets. The end product is estimated to cost less than comparable conventional lumber pallets. Of course. total cost depends on many factors, especially the number of pallets involved. The pallet is an expendable, nestable, nine-block, single-face pallet, capable of supporting light loads. The double-face pallet shown in figure 39 is made by bonding the bottoms of two single-face pallets. It is said to be capable of carrying 907 kg (2,000 lb). Because pallet construction does not involve nails, these pallets handle goods relatively snag free.

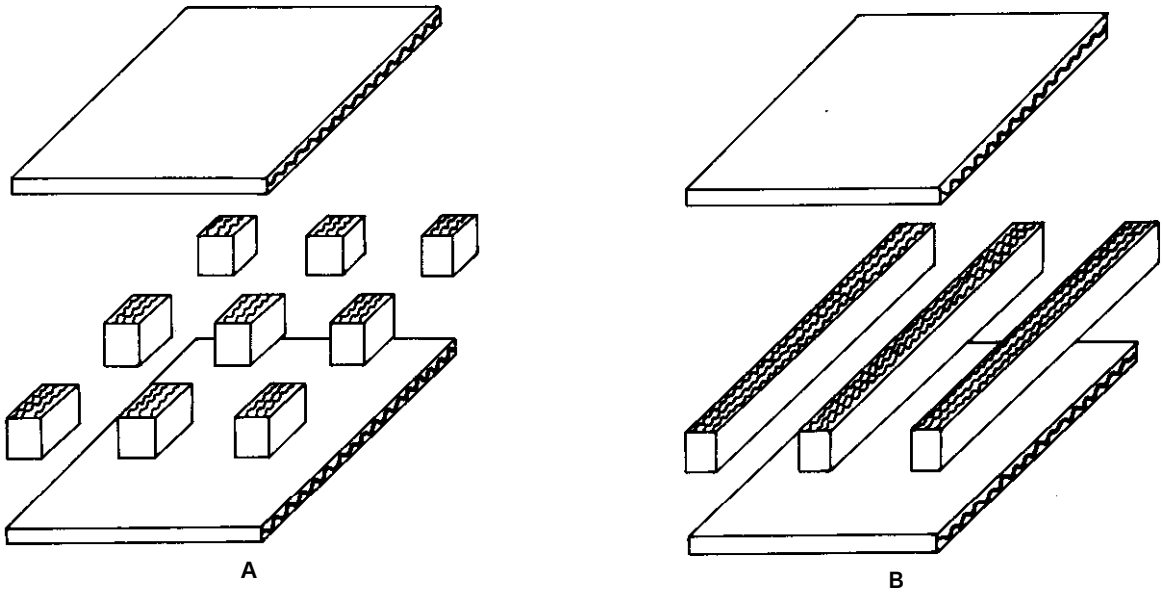

Figure 38.—Styles of all-corrugated fiberboard pallets: A. nine-block, B. double-face, two-way entry style. (ML86 5150)

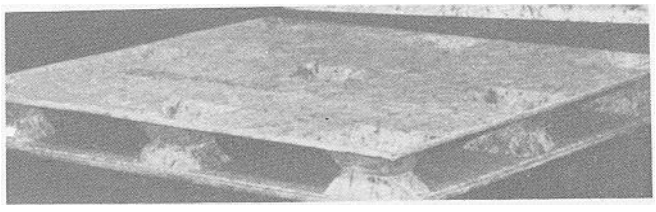

Figure 39.—Molded wood-chip pallet. (M 152103)

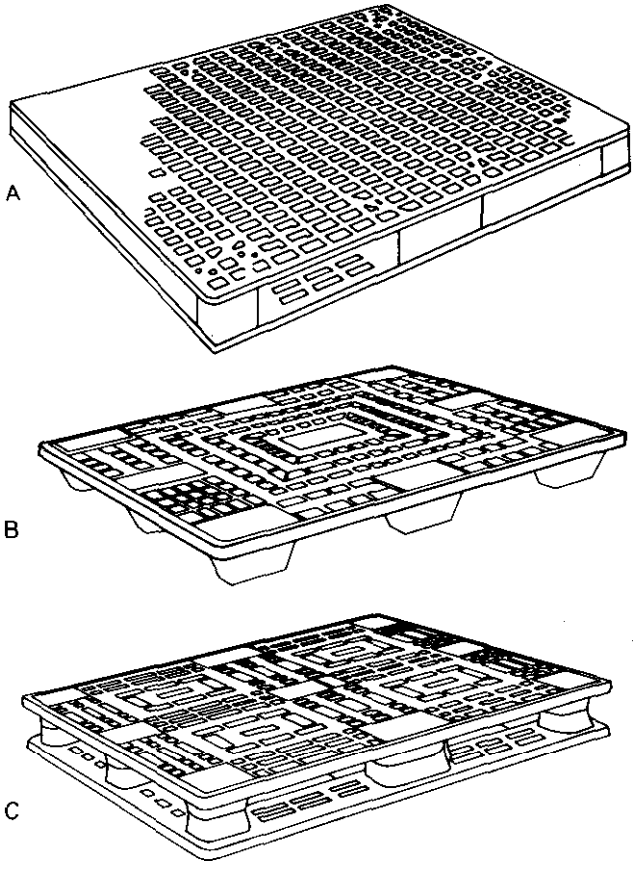

Figure 40.—Typical styles of plastic returable pallets: A. pallet used for fast-freezing of food, B. lightweight general purpse pallet and C. heavier duty general purpose pallet (ML86 5151)

Nonwood Pallets

Plastic.— Plastic pallets are especially suited to particular applications, such as transportation of food or medicine, so long as the pallets are retained or returned. They are made principally of high-density polyethylene (HDPE) and polystyrene, and they are chemically inert, strong (rigid), easily cleaned, and reusable. However, they are also relatively expensive so that they are usually limited to captive storage and shipment operations where pallet loss can be minimized. Typical versions of plastic pallets are shown in figure 40 A, B, and C. Their characteristics are summarized in table 1.

Pallet A in figure 40 is made of HDPE resin, does not splinter or check, and can be obtained in different sizes. The special lattice-like construction of the top deck permits cold air circulation around food for fast, uniform freezing. This feature, together with the ability to support food directly without odor or taste transfer, makes this type of pallet ideal for special applications.

Steel.—Steel pallets provide for maximum durability and load-carrying capacity with a minimum of maintenance. Most steel pallets are of welded construction and are usually protected with baked enamel, zinc plating, or hot-dip galvanizing. These pallets can be steam cleaned quickly and easily and are commonly used where scrupulous cleanliness is required. However, steel pallets are relatively expensive and are usually limited to captive storage and preshipment operations. Some typical versions of steel pallets are shown in figure 41, and their characteristics are summarized in table 1.

Table 1.—Characteristics of nonwood pallets

Figure	Composition and use	Weight	Load-carrying ability	size
		kg (lb)		*mm (in)*
40A	HDPE resin. Applications in freezing.		907-1,814 (2,000-4,000)	**Various**
40B	Single-face, polyethylene or polystyrene. Nestable.	12.7 (28)	1,361 (3000)	1.210 × 1,016 (48 × 40)
40C	Double-face, polyethylene or polystyrene. Nestable.	20 (44)	(4000)	1,210 × 1.016 (48 × 40)
41A	All-wire, nestable. Four-way fork-lift entry. Freezer and grocery use.	22.7 (50)	(8000)	Various
41B	Universal steel shipping pallet. Automotive industry use.	27.2 (60)	4,536 (10,000)	Various
41C 41D	Steel, rugged.	34 (75)	18,143 (40,000)	Various

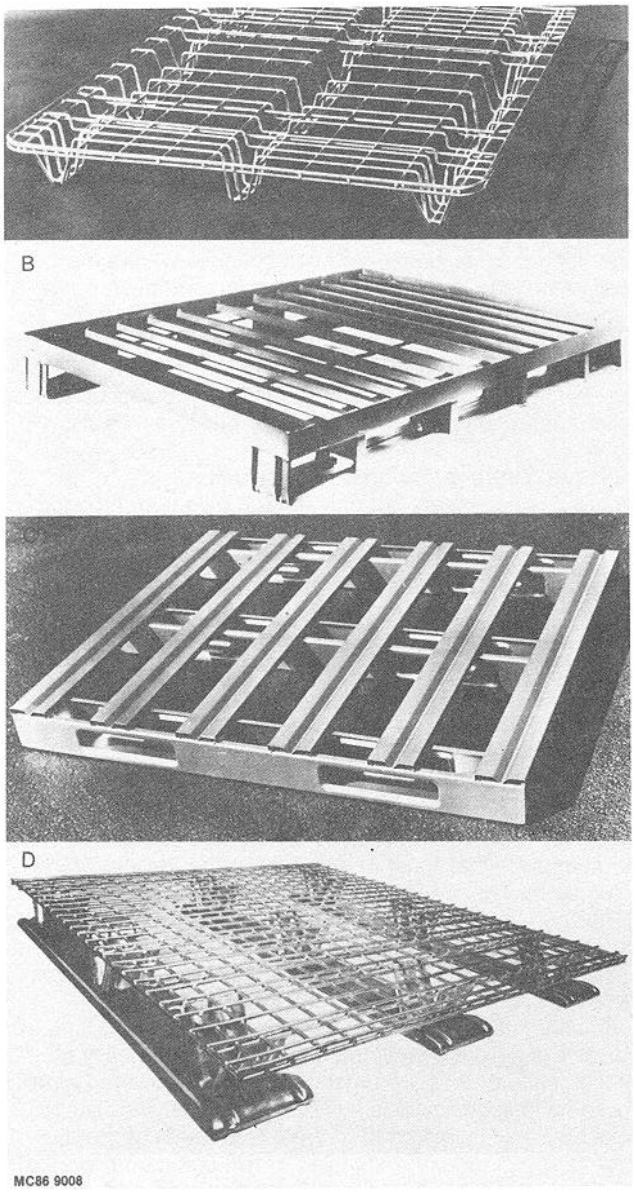

Figure 41.—Different models of steel reusable pallets: A. all-wire pallet, B. universal-shipping pallet, C. a more rugged pallet than B, D. very rugged pallet design. (ML86 9008)

Pallet-Handling Equipment

Hydraulic Handtrucks

The most elementary and economical device to lift, transport, and deposit pallets on the floor is the hydraulic handtruck, sometimes referred to as a pallet jack (fig. 42). It enables an operator to lift a pallet to a maximum of about 127 mm (5 in) off the floor through a manually-actuated, hydraulically-powered lifting mechanism. Once raised, the pallet may be pulled or pushed manually to a desired location and deposited. The truck shown in figure 42A consists of a frame, steering handle and grip, pallet entry forks, hydraulic pump, mechanical-lifting mechanism, and wheels. The manually actuated hydraulic pump is its most important and complex component, Generally, all popular models of pallet trucks have totally enclosed, field-repairable pumps that operate under the same principles. When the pump is required to lift a load, the downward movement of the truck handle or a pedal causes the pump piston to lower, thus forcing oil out of the pump chamber. Upward movement of the handle or spring return of the foot pedal causes the pump piston to rise. At each successive upward and downward stroke more oil is drawn from the reservoir and pushed into the lift cyclinder, forcing the ram upwards. The rising cylinder activates the trucks mechanical lifting system. To deposit a load, either a hand lever is tripped or a foot-pedal valve is positioned to open the system and allow oil to flow back to the reservoir at a controlled rate to control the lowering speed.

Forks are available in a variety of lengths and spacings between the tines. The most frequently ordered configuration has a length of 1,219 mm (46 in) and a spacing of 686 mm (27 in). Second in popularity are a length of 1,067 mm (42 in) and a spacing of 559 mm (22 in). Obviously, the nature of the pallet to be handled is the determining factor in choosing the dimensions of a hand pallet truck.

A key factor in the effective and safe operation of a hand pallet truck is the ease with which it rolls. Most pallet trucks are available with a variety of wheel materials depending on user preference and floor conditions. Generally, steel wheels are the easiest to push or pull, but they are the hardest on the floors, especially those made of concrete. Wheels are also made of nylon, polyurethane, rubber, and aluminum. The choice among these materials depends on the condition of the floors, the weights of the loads to be carried, and the severity of the work environment. Hand pallet trucks require relatively smooth, flat floors for easy rolling, regardless of the composition of the wheels.

Pallet trucks are designed to move relatively light loads horizontally and are used most productively over only short distances. Longer hauls of heavy loads that require unstacking and stacking is better done with more expensive powered mobile equipment designed for the purpose.

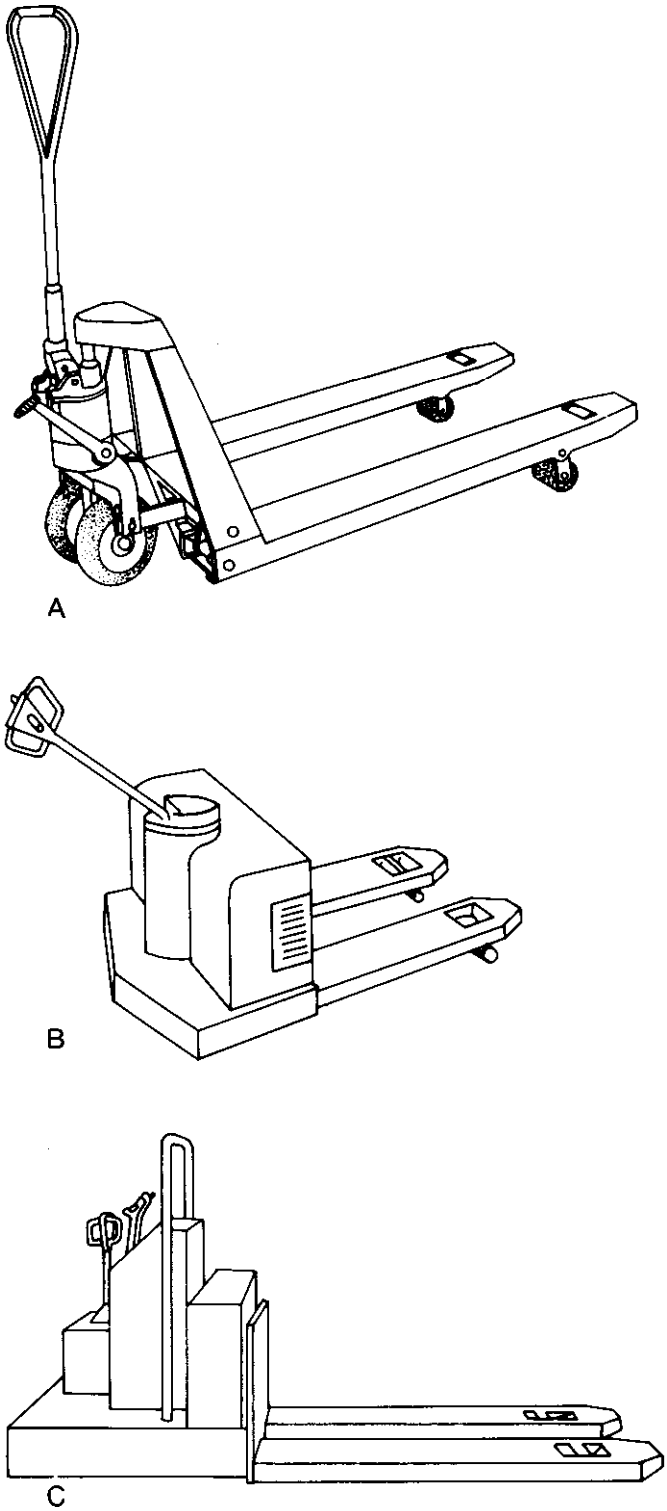

Figure 42.—Various handtrucks for pallet handling: A. hydraulic handtruck, B. motorized handtruck, and C. motorized hand/rider truck. (ML86 5152)

Battery-Powered Handtrucks
The battery-powered handtruck performs the same functions as the hydraulic handtruck and consists essentially of the same parts, except for replacement of the hydraulic power by battery power for lifting, and replacement of manual power by battery-operated motorized power for horizontal movement. The most elementary battery-powered handtruck (fig. 42B) is commonly referred to as a "walkie" because the operator is required to walk with the device as it moves. Operation is quite simple and combines easy steering, positive braking, precision travel control, and push-button lifting and lowering.

The rider type, which has a platform area adjacent to the handle for the operator to ride (fig. 42C), is designed for pallet applications that involve longer horizontal hauls.

High-lift, Battery-Powered, Handtrucks
Where it is necessary not only to lift a pallet off the floor and move it a short distance horizontally, but also to stack or unstack it, the simplest device is a high-lift, battery-powered, handtruck (fig. 43). This device, commonly referred to as a "narrow-aisle stacker," is usually riderless and is used for moderate duty cycles of warehouse materials handling and where light-weight, uniform-size pallet loads are encountered.

Powered Forklift Trucks
Forklift trucks are powered by either gasoline, LP-gas, diesel, or electricity, and range in capacity from 907 kg (2,000 lb) to 13,608 kg (30,006 lb). All make provision for the operator either to sit or stand while the forklift truck is being used. The tires are either solid cushioned for indoor use or pneumatic for use outdoors. Hundreds of makes and models of powered forklift trucks are available. Selection of a specific model depends on many factors, including cost, capacity, speed, maneuverability, lift height, ease of operation, maintenance required, operator comfort, time in use, the terrain, the environment, and the availability of attachments. The various manufacturers of powered forklift trucks have specifications for all of their products. These must be carefully matched to the exact needs of the user prior to any purchase. Examples of two common powered "sit-down" type forklift trucks, electric-powered and fuel-powered, are shown in figure 44. One of the most popular warehousing forklift trucks is the narrow aisle "stand-up" rider style shown in figure 45.

Automatic Pallet-Handling Equipment
Automatic storage/retrieval systems (AS/RS) are becoming increasingly popular, and there are many varieties and styles available. One example (fig. 46) shows the automatic pallet-handling equipment being used to stock and unstock pallets stored in metal racks.

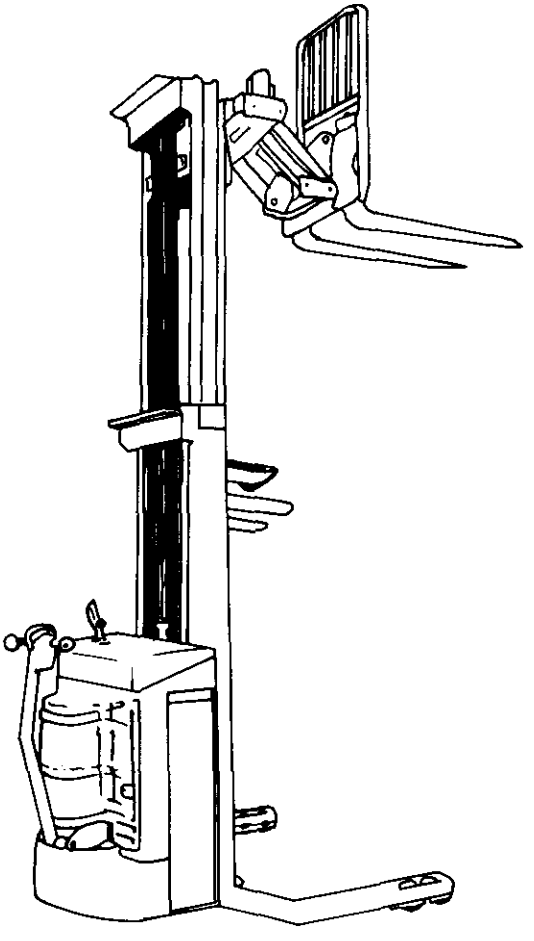

Figure 43—High-lift, battery-powered handtruck. (ML86 5153)

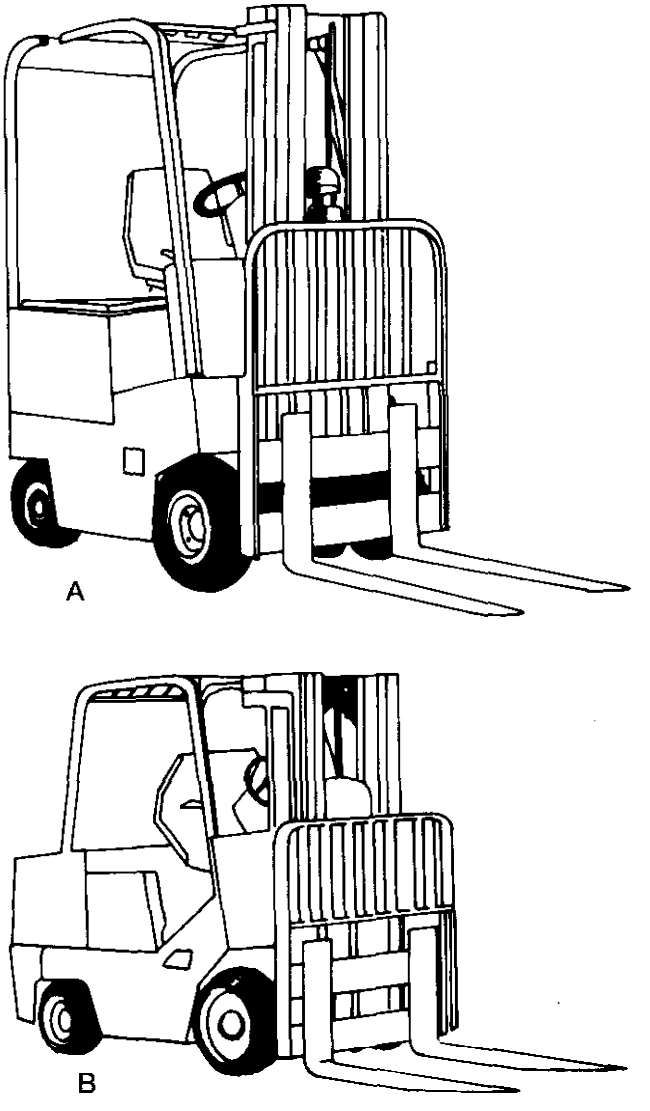

Figure 44.—Powered, sitdown forklift trucks: A. battery-powered, B. fuel-powered. (ML86 5154)

Slipsheets

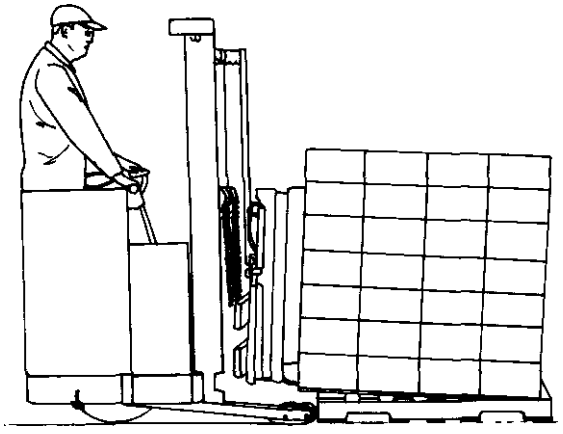

Figure 45.—Narrow aisle, standup rider, forklift truck (ML86 5165)

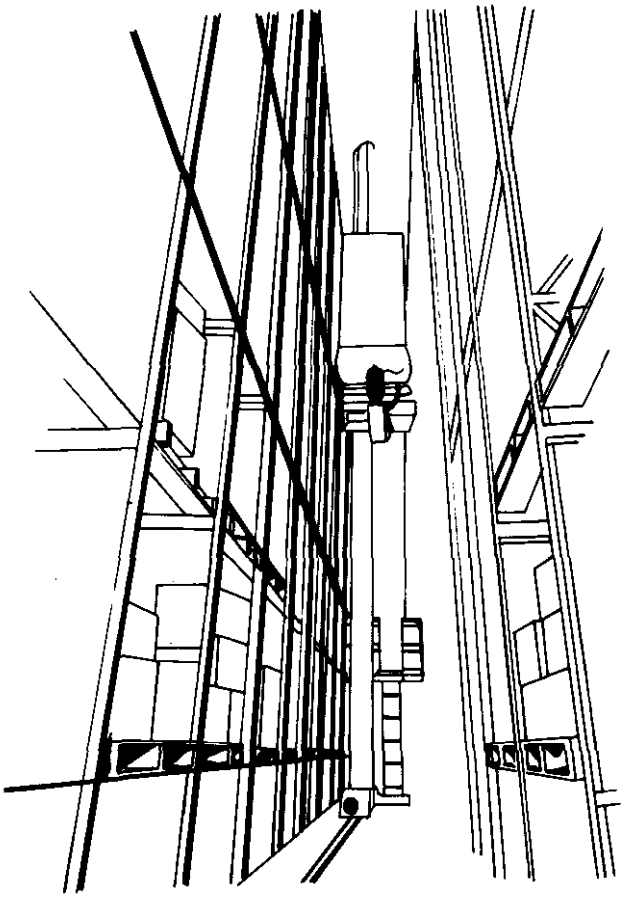

Figure 46.—Automatic pallet-handling equipment. (ML86 5156)

A slipsheet is defined as a flat, thin sheet of material such as corrugated fiberboard, solid fiberboard, or plastic which is used as a base for assembling, storing, handling, or transporting goods and products in a unitized load. Tabs are located on one or more sides of the slipsheet to facilitate handling with specialized equipment. The principal styles of slipsheets are shown in figure 47. The most common configurations of slipsheet tab corners are shown in figure 48.

Although the concept of using a slipsheet as a replacement for the pallet was started in 1946, the more recent acceptance of load unitization to reduce excessive handling of individual containers and to reduce both labor costs and product damage has been the prime driving force behind the broadened use of slipsheets. The slipsheet and the pallet each has its own place in the material-handling system, and the advantages and disadvantages of each must be carefully weighed.

Materials

Corrugated fiberboard are the least expensive of slipsheets and are used primarily for one-way trips. Originally they were not moisture-resistant and were easily affected by changes in humidity and temperature, for example in cold-storage applications. If not properly handled, the gripper tab was often ripped from the sheet. These early problems have been mostly overcome. Paper-making methods have improved, tabs are now reinforced for added strength, and surfaces are coated to resist shipping and storage environments.

Solid fiberboard is another material commonly used for slipsheets. Solid fiberboard are more expensive than corrugated fiberboard slipsheets, but they are more durable and more resistant to extreme humidity. They are constructed by laminating three or more sheets of heavy paperboard with a water-resistant adhesive.

me most durable slipsheets available are made of plastics including but not limited to polyethylene and polypropylene. The plastic is completely moisture proof, can be cleaned for reuse, and has the highest tensile strength of the materials commonly used to manufacture slipsheets.

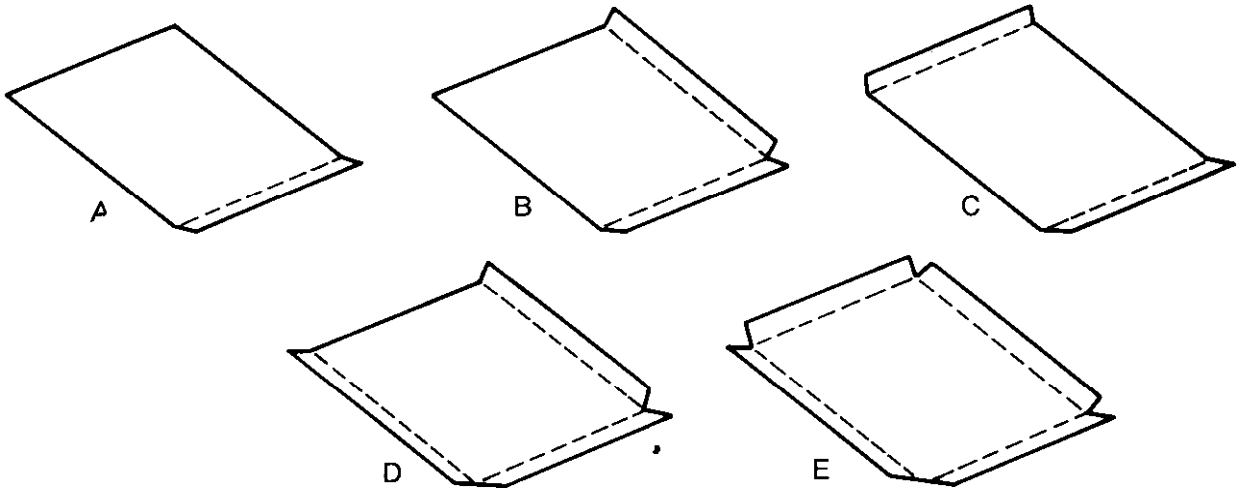

Figure 47.—Common slipsheet tab configurations: A. one-tab slipsheet, B. two-tab slipsheet (tabs on adjacent sides), C. two-tab slipsheet (tabs on opposite sides), D. three-tab slipsheet, E. four-tab slipsheet. (ML86 5157)

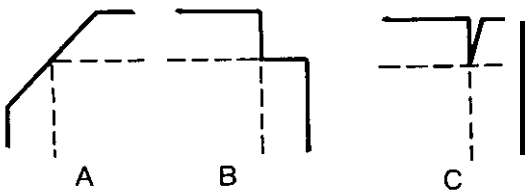

Figure 48.—Common tab corner configurations: A. diagonal cover cutout, B. 90 degree corner cutout, C. slit corner. (ML86 5158)

Slipsheet-Handling Equipment

Slipsheeted loads are handled primarily by the use of attachments fitted to a variety of forklift trucks and powered walkies. The basic attachment is a "push-pull" which is a generic term for a mechanical/hydraulic-powered attachment to retrieve or discharge slipsheeted loads. A forklift truck equipped with one type of push-pull attachment is shown in figure 49 in operation with a load. An essential part of any push-pull attachment is the gripper jaw (fig. 50A). The gripper jaw is a mechanical assembly which clamps the tab of the slipsheet uniformly along its length to pull the unit load onto the forks or platens during load retrieval. Platens are similar to conventional forks, but wider, and serve to support the load while it is being handled by the truck. The lift truck operator extends the faceplate to full extension, and the slipsheet tab is clamped by the gripper jaw before the faceplate starts to retract. As the load is being pulled onto the forks or platens (fig. 50B), the operator puts the lift truck into forward motion until the load is secure. Moving the load is shown in fig. 50C. The gripper jaw is automatically opened as the push cylinders are activated. As the faceplate is pushed forward, the operator simultaneously puts the lift truck into reverse until the load is removed from the forks or platens.

Push-pull attachments can be ordered with new forklift trucks or installed by the local dealer on existing vehicles. The push-pull attachment is best suited to sit-down, counterbalanced rider forklift trucks. One factor that must be kept in mind is that a push-pull attachment reduces the lifting capacity of the forklift truck. This results from the attachments weight which shins the center of gravity of the load out from the truck. For example, a forklift truck with 1,814-kg (4,000-lb) capacity could be expected to be rerated with an attachment at approximately 40 percent lower, or 1,089 kg (2,400 lb). If lift capacity is not sufficient for the loads being handled, the use of a push-pull attachment may require a larger capacity truck.

Mechanizing the handling at the receiving dock is a problem with slipsheeted loads. Of course, handling can be performed with the general purpose counterbalanced forklift trucks equipped with a push-pull attachment as described above. But trucks of this type require a relatively large investment, and managers of warehouses in which the volume of incoming slipsheeted loads is low have been reluctant to make such an investment.

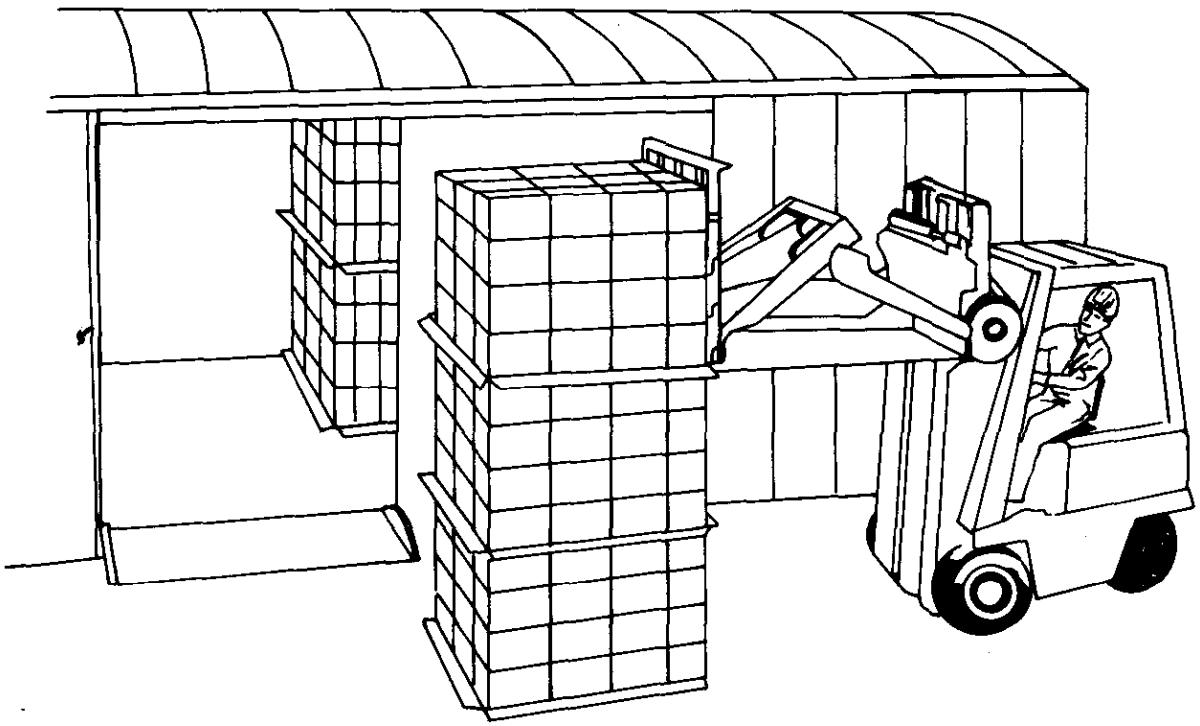

Figure 49.—Forklift truck equipped with push-pull attachment in operation with load. (ML86 5159)

The development of a new family of outrigger push-pull trucks, at about half the cost of a general purpose counterbalanced forklift truck and push-pull attachment, has dramatically improved the dock-handling capability of warehouses receiving slipsheeted loads. Most of the new trucks are low-lift walkie and walkie-rider versions which resemble modified pallet trucks. However, a recently introduced standup-rider truck with a 1,524 mm (60 in) lift can stack or unstack two loads high, and it also has side-shifting capability.

These outrigger trucks are highly maneuverable for unloading trailers and railcars, and they can place slipsheeted loads on pallets in dock areas where loads are staged before moving to storage. By having a pair of platens that enable pickup of pallet loads as well as slipsheeted loads, the new outrigger push-pull trucks have gained a reputation as universal handlers. Three different styles of outrigger push-pull trucks are shown in figure 51,

A popular method of handling lightweight loads (i.e. 227 kg (500 lb) or less) is the use of a so-called “chisel-fork” which has much thinner and wider forklift tines. The “chisel-fork” truck is not restricted to slipsheets but can be used for regular pallets.

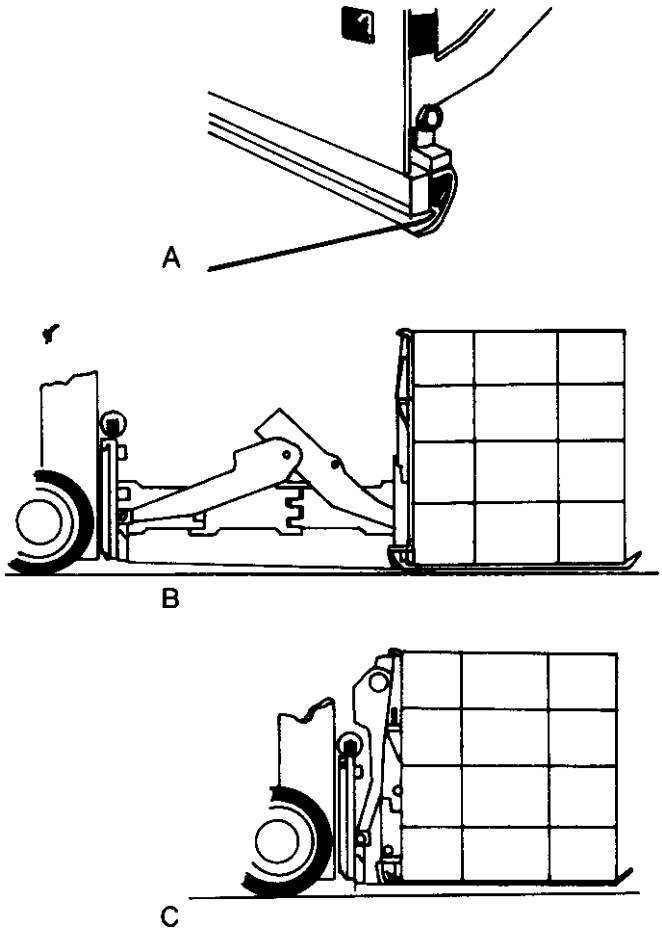

Figure 50.—The gripper jaw and ifs function during loading and unloading operations: A. the gripper jaw, B. pulling load on platens, C. moving load. (ML86 5160)

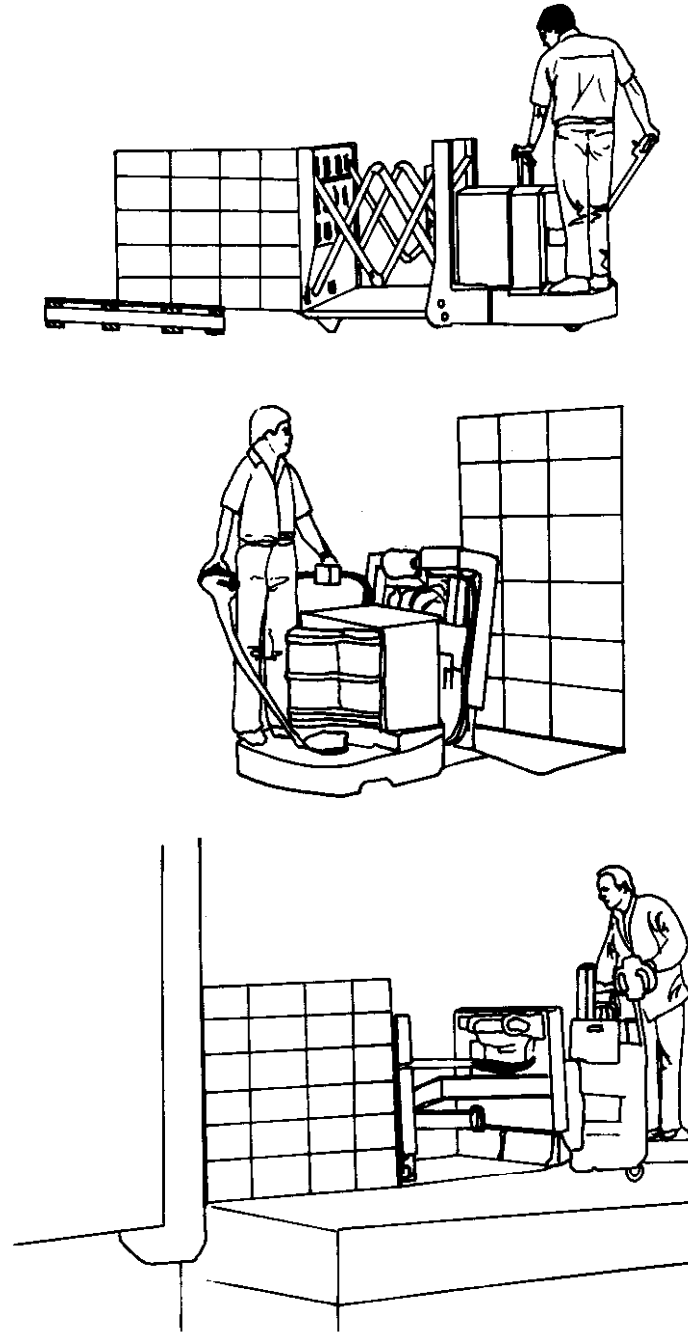

Figure 51.—Various styles of outrigger push-pull handtrucks. (ML86 5161)

Part III
Appendixes

Appendix A
References

Anonymous. Hand-strapping equipment. Material Handling Engineering, 36(2): 151-155; 1981.

Cahners Publishing Company, Division of Reed Holdings, Inc. Packaging encyclopedia and yearbook 1985. Boston, MA. 30(4); 1985.

Eichler Associates. Wood pallet manufacturing practices. Revised edition. Cape Coral, FL: 1976.

Forest Products Laboratory. Wood pallet manufacturing. Res. Note FPL-0213. Madison, WI: U.S. Department of Agriculture, Forest Service, Forest Products Laboratory; 1971.

Forest Products Laboratory. Wood handbook: Wood as an engineering material. Agric. Handb. No. 72. Washington, DC: U.S. Department of Agriculture, Forest Service; 1974.

Kurtenacker, R. S. Appalachian hardwoods for pallets: effect of fabrication variables and lumber characteristics on performance. Res. Pap. FPL 112. Madison, WI: U.S. Department of Agriculture, Forest Service, Forest Products Laboratory; 1969.

Kurtenacker, R. S. Staple- and nail-assembled pallets under impact loading. Res. Pap. FPL 272. Madison, WI: U.S. Department of Agriculture, Forest Service, Forest Products Laboratory; 1975.

Markwardt, L. J.; Wilson, T.R.C. Strength and related properties of wood grown in the U.S.A. Bull. 479. Washington, DC: U.S. Department of Agriculture; 1935.

Oetrem, F. E.; Godshall, W. D. An assessment of the common carrier shipping environment. Gen. Tech. Rep. FPL-22. Madison, WI: US. Department of Agriculture, Forest Service, Forest Products Laboratory; 1979.

Stern, E. George. Influence of variations in test procedures on nail properties obtained with “Morgan impact bend-angle nail tester.” Bull. No. 98. Blacksburg, VA: Virginia Polytechnic Institute and State University; 1970 December.

Stern, E. George. The MIBANT quality-control tool for nails. Bull. No. 100. Blacksburg, VA: Virginia Polytechnic Institute and State University; 1972a February.

Stern, E. George. MIBANT test criteria for pallet nails. Bull. No. 115. Blacksburg. VA: Virginia Polytechnic Institute and State University: 1972b December.

Stern, E. George. Reconfirmation of MIBANT test criteria for pallet nails. Bull. No. 122. Blacksburg. VA: Virginia Polytechnic Institute and State University: 1973 December.

Appendix B
Specifications and Standards

Unitized Loads

1. American National Standards Institute, Inc. (ANSI)
   1430 Broadway
   New York, NY 10018
   a. ANSI MH10.1M-1980. American National Standard for Unit-Load and Transport-Package Sizes
   b. ANSI MH10.6M-1983 American National Standard for Surface Vehicles-Unit-Load Heights for Palletized Loads
2. American Society for Testing and Materials (ASTM)
   1916 Race Street
   Philadelphia, PA 19103
   a. ASTM D1083-85, Methods of Testing the Mechanical Handling of Unitized Loads and Large Shipping Cases and Crates
   b. ASTM D3951-82, Standard Practice for Commercial Packaging
   c. ASTM D4169-82. Practice for Performance Testing of Shipping Containers and Systems
3. Department of Defense (DOD)
   Navy Publications and Printing Service Office
   Fourth Naval District
   700 Robbins Avenue
   Philadelphia, PA 19111
   a. MIL-STD-147, Palletized and Containerized Unit Loads, 40 × 48 Inches, 4-Way (Partial) Pallet Skids, Runners, or Pallet Type Base (September 1981)
   b. MIL-STD-1187, Standard Size Unit, Intermediate and Exterior Containers for Modular Packaging and Unitization on the 40- × 48-Inch Pallet (February 1976)
   c. MIL-HDBK-236R, Index to Standards for Palletizing, Truck Loading, Railcar Loading, and Container Loading of Hazardous Materials (December 1981)
   d. MIL-STD-1320/3, Truck Loading of Hazardous Materials, Palletized Unit Loads, Chimney Pattern (January 1975)
   e. MIL-STD-1320/2, Truck Loading of Hazardous Materials, Palletized Unit Loads, Double Row Pattern (January 1975)

Strapping

1. ASTM
   a. ASTM D3953-83 Flat Steel Strap and Connectors
   b. ASTM D3950-80 Strapping, Nonmetallic (and Connectors)
2. General Services Administration (GSA)
   Specifications Unit (WFSIS)
   7th & D Streets, SW.
   Washington, DC 20406
   a. A-A-687, Strapping, Nonmetallic (and Connectors) (December 1979)
   b. A-A-880, Strapping, Steal Flat and Seals (May 1980)
   c. PPP-S-760B, Strapping, Nonmetallic (and Connectors) (September 1973)
   d. QQ-S-781H, Strapping, Steel, and Seals (May 1977)
3. DOD
   a. MIL-S-43104B, Strapping and Sealing Kits, Hand Operated (February 1968)

Shrink, Stretch, and Net Wrapping

1. ASTM
   a. ASTM 4503-85, Standard Guide for the Selection of Stretch, Shrink, and Net Wrap Materials
2. DOD
   a. A-A-1827, Plastic Sheet (Polyethylene, Heat Shrinkable) (April 1982)
   b. MIL-HDBK-770, Shrink Film in Military Packaging (May 1976)

Pallets

1. ANSI
   a. ANSI MH1.1.2-1978 Pallet Definitions and Terminology
   b. ANSI MH1.2.2-1975 Pallet Sizes
   c. ANSI MH1.4.1-1977 Procedures for Testing Pallets
2. ASTM
   a. ASTM D 143-83 Standard Methods of Testing Small Clear Specimens of Timber
   b. ASTM D 1185-84 Standard Methods of Testing Pallets
   c. ASTM D 1761-77 Standard Methods of Testing Mechanical Fasteners in Wood
   d. ASTM D 2555-81 Standard Methods for Establishing Clear Wood Strength Values
   e. ASTM F 680-80 Standard Methods of Testing Nails
3. National Wooden Pallet and Container Association (NWPCA)
   1619 Massachusetts Avenue NW.
   Washington, DC 20036
   a. NWPCA Logo-Mark Hardwood Pallet Standards (March 1982)
   b. NWPCA Logo-Mark West Coast Pallet Standards (March 1982)
   c. NWPCA PP 61-80 Specifications for Softwood Plywood Pallets (in cooperation with American Plywood Association) (February 1980)
   d. NWPCA Specifications and Grades for Hardwood Warehouse, Permanent or Returnable Pallets (1962, amended 1969, 1974, and 1977)
4. Grocery Manufacturers of America (GMA)
   1010 Wisconsin Avenue, NW.
   Suite 800
   Washington DC 20007
   a. Recommended Hardwood Pallet Specifications for the Grocery Industry (May 1978)
5. Western Wooden Box Association (WWBA)
   430 Sherman Avenue
   Suite 206
   Palo Alto, CA 94306
   a. Standard Grading Rules, Expendable Produce Pallets (August 1976)
6. American Society of Agricultural Engineers (ASAE)
   2950 Niles Road
   P.O. Box 410
   St. Joseph, MO 49085
   a. Standards for Agricultural Pallet Bins (1975)

7. Society of Automotive Engineers, Inc. (SAE)
   400 Commonwealth Drive
   Warrendale, PA 15096
   a. Recommended Practices for Air-Land Demountable Cargo Pallets (1977)
   b. Pallet Sizes (1967)
   c. Minimum Requirements for Air Cargo Pallets (1987)
8. GSA
   a. PPP-P-1660A, Pallet, Expendable (April 1973, amended March 1975)
   b. A-A-889, Pallet, Material Handling (Wood, Double Faced, Stringer Construction) (August 1981)
   c. NN-P-71C, Pallets, Material Handling, Wood, Stringer Construction, 2-way and 4-way (partial) (September 1973, amended May 1977)
9. DOD
   a. MIL-P-27443E, Pallet, Cargo, Aircraft, Type HCU-6/E, HCU-12/E, and HCU-10/C (February 1987)
   b. MIL-P-52910A, Pallet, Cargo, For Ribbon Bridge Transporter (May 1983)
   C. MIL-P-52971, Pallet, Material Handling, General Cargo 40 × 48 Inch, Non-Wood, 4 Way (October 1979)
   d. MIL-P-23312C, Pallet, Material Handling, Metal (For Ordnance Items) Mar 3 Mod 0, Mar 12 Mod 0, and Mar 12 Mod 1 (November 1976)
   e. MIL-P-52999, Pallet, Material Handling, Wood Stringer Construction, 4-Way Partial, 48 × 40 Inches (December 1981)
   f. MIL-P-15011H, Pallet, Material Handling, Wood, Post Construction, 4-Way Entry (September 1982)
   g. MIL-P-43465, Pallet, Material Handling, Wood, Double Food, (Special Design for use with Conex Containers) (November 1988)
   h. MIL-P-15943D, Pallet, Material Handling, Wood, Ship Cargo, Stevedoring, 48 Inches Long by 72 Inches Wide, 2-Way Entry (March 1982)
   i. MIL-P-45449A, Pallet, Units, Wood, For Shipment of Projectile Metal Parts and Projectile Ammunition (March 1972)
   j. MIL-P-87089, Pallets, Material Handling, Molded Wood Particles 40 × 48 Inch, 4-Way (November 1981)
   k. MIL-STD-731, Quality of Wood Members for Containers and Pallets, (December 1959)

Slipsheets

1. ANSI
   a. ANSI MH1.5M-1980 Slipsheets

Appendix C
Specific gravity and modulus of rupture

The specific gravity and the modulus of rupture (MOR) of various woods are a guide to the strength of the pallets made from them. Observations of these characteristics are shown in table Cl for some of the species those wood is commonly used as pallet stock in the United States. MOR is given both for green wood and at 12 percent moisture content to illustrate the large effect of moisture on MOR.

Table C1.—Specific gravity and modulus of rupture of woods commonly used as pallet stock in the United States[1]

Common and botanical names of species	Specific gravity[2]	Modulus of rupture[3]	
		Green	At 12-percent moisture content
		------ MPa -----	
HARDWOODS			
Alder, red (*Alnus rubra*)	0.37	44.8	67.6
Ash:			
Black (*Fraxinus nigra*)	.45	41.4	86.9
Blue (*F. quadrangulata*)	.53	66.2	95.1
Green (*F. pennsylvanica*)	.53	65.5	97.2
Oregon (*F. latifolia*)	.50	52.4	87.6
White (*F. americana*)	.55	65.5	103.4
Aspen:			
Bigtooth (*Populus grandidentata*)	.36	37.2	62.7
Quaking (*P. tremuloides*)	.35	35.1	57.9
Basswood, American (*Tilia americana*)	.32	34.5	60.0
Beech, American (*Fagus grandifolia*)	.56	59.3	102.7
Birch:			
Paper (*Betula papyrifera*)	.48	44.1	84.8
Sweet (*B. lenta*)	.60	64.8	116.5
Yellow (*B. alleghaniensis*)	.55	57.2	114.4
Buckeye, yellow (*Aesculus octandra*)	.38	33.1	51.7
Butternut (*Juglans cinerea*)	.36	37.2	55.8
Catalpa (*Catalpa speciosa*)	.42	35.8	64.8
Cottonwood:			
Balsam poplar (*Populus Balsamifera*)	.31	26.9	46.9
Black (*P. trichocarpa*)	.31	33.9	58.6
Eastern (*P. deltoides*)	.37	36.5	58.6
Elm:			
American (*Ulmus americana*)	.46	49.6	81.3
Hard (*Rock*) (*U. thomasii*)	.57	65.5	102.0
Slippery (*U. rubra*)	.48	55.1	89.6
Hackberry (*Celtis occidentalis*)	.49	44.8	75.8
Hickory, pecan:			
Bitternut (*Carya cordiformis*)	.60	71.0	117.9
Pecan (*C. illinoensis*)	.60	67.6	94.4
Water (*C. aquatica*)	.61	73.8	122.7
Hickory, true:			
Mockernut (*Carya tomentosa*)	.64	76.5	132.3
Pignut (*C. glabra*)	.66	80.7	138.6
Shagbark (*C. ovata*)	.64	75.8	139.3
Shellbark (*C. laciniosa*)	.62	72.4	124.8
Locust, black (Robinia pseudoacacia)	.66	95.1	133.7

Table C1.—Specific gravity and modulus of rupture of woods commonly used as pallet stock in the United States[1]—con.

Common and botanical names of species	Specific gravity[2]	Modulus of rupture[3]	
		Green	At 12 percent moisture content
		------ MPa ------	
HARDWOODS—con.			
Madrone (*Arbutus menziesii*)	.58	32.4	50.3
Magnolia:			
Cucumbertree (*Magnolia acuminata*)	.44	51.0	84.8
Southern (*M. grandiflora*)	.46	46.9	77.2
Maple:			
Bigleaf (*Acer macrophyllum*)	.44	51.0	73.8
Black (*A. nigrum*)	.52	54.4	91.7
Red (*A. rubrum*)	.49	53.1	92.4
Silver (*A. saccharinum*)	.44	40.0	61.3
Sugar (*A. saccharum*)	.56	64.8	108.9
Oak, red:			
Black (*Quercus velutina*)	.56	56.5	95.8
Cherrybark (*Q. falcata* var. *pagodifolia*)	.61	74.5	124.8
Laurel (*Q. laurifolia*)	.56	54.4	86.9
Northern red (*Q. rubra*)	.56	57.2	98.6
Pin (*Q. palustris*)	.58	57.2	96.5
Scarlet (*Q. coccinea*)	.60	71.7	120.0
Southern red (*Q. falcata*)	.52	47.6	75.1
Water (*Q. nigra*)	.56	61.4	106.2
Willow (*Q. phellos*)	.56	51.0	100.0
Oak, white:			
Bur (*Q. macrocarpa*)	.58	49.6	71.0
Chestnut (*Q. prinus*)	.57	55.2	91.7
Live (*Q. virginiana*)	.80	82.0	126.8
Overcup (*Q. lyrata*)	.57	55.2	86.9
Post (*Q. stellata*)	.60	55.8	91.0
Swamp chestnut (*Q. michauxii*)	.60	58.6	95.8
Swampy white (*Q. bicolor*)	.64	68.3	122.0
White (*Q. alba*)	.60	57.2	104.8
Persimmon (*Diospyros virginiana*)	.64	68.9	122.0
Sweetgum (*Liquidambar styraciflua*)	.46	48.9	86.2
Sycamore, American (*Platanus americana*)	.46	44.8	68.9
Tupelo:			
Black (*Nyssa sylvatica*)	.46	48.3	66.2
Water (*N. aquatica*)	.46	50.3	66.2
Willow, black (*Salix nigra*)	.36	33.1	53.8
Yellow-popular (*Liriodendron tulipifera*)	.40	41.4	69.6

Table C1.—Specific gravity and modulus of rupture of woods commonly used as pallet stock in the United States[1]—con.

Common and botanical names of species	Specific gravity[2]	Modulus of rupture[3]	
		Green	At 12 percent moisture content
		- - - - - - - MPa - - - - - - -	
SOFTWOODS			
Cedar:			
Alaska- (*Chamaecyparis nootkatensis*)	.42	44.1	76.5
Atlantic white- (*C. thyoides*)	.31	32.4	46.9
Eastern redcedar (*Juniperus virginiana*)	.44	48.3	60.7
Incense- (*Libecedrus decurrens*)	.35	42.7	55.2
Northern white- (*Thuja occidentalis*)	.29	29.0	44.8
Port-Orford- (*Chamaecyparis lawsoniana*)	.39	45.5	87.6
Western redcedar (*Thuja plicata*)	.31	35.8	51.7
Douglas-fir:[4]			
Coast (*Pseudotsuga menziesii*)	.45	53.1	85.5
Interior West (*P. menziesii*)	.46	53.1	86.9
Interior North (*P. menziesii*)	.45	51.0	90.3
Interior South (*P. menziesii*)	.43	46.9	82.0
Fir:			
Balsam (*Abies balsamea*)	.33	37.9	63.4
California red (*A. magnifica*)	.36	40.0	72.4
Grand (*A. grandis*)	.35	40.0	61.4
Noble (*A. procera*)	.37	42.7	73.8
Pacific silver (*A. amabilis*)	.40	44.1	73.1
Subalpine (*A. lasiocarpa*)	.31	33.8	59.3
White (*A. concolor*)	.37	40.7	67.6
Hemlock:			
Eastern (*Tsuga canadensis*)	.38	44.1	61.4
Mountain (*T. mertensiana*)	.42	43.4	79.3
Western (*T. heterophylla*)	.42	45.5	77.9
Larch, western (*Larix occidentalis*)	.48	53.1	89.6
Pine:			
Eastern white (*Pinus strobus*)	.34	33.8	59.3
Jack (*P. banksiana*)	.40	41.4	68.3
Loblolly (*P. taeda*)	.47	50.3	88.3
Lodgepole (*P. contorta*)	.38	37.9	64.8
Longleaf (*P. palustris*)	.54	58.6	100.0
Pitch (*P. rigida*)	.47	46.9	74.5
Pond (*p. serotina*)	.51	51.0	80.0
Ponderosa (*P. ponderosa*)	.38	35.1	64.8
Red (*P. resinosa*)	.41	40.0	75.8
Sand (*P. clausa*)	.46	51.7	80.0
Shortleaf (*P. echinata*)	.47	51.0	90.3
Slash (*P. elliottii*)	.54	60.0	112.4
Spruce (*P. glabra*)	.41	41.4	71.7
Sugar (*P. lambertiana*)	.34	33.8	56.5
Virginia (*P. virginiana*)	.45	50.3	89.6
Western white (*P. monticola*)	.35	32.4	66.9

Table C1.—Specific gravity and modulus of rupture of woods commonly used as pallet stock In the United States[1]—con.

Common and botanical names of species	Specific gravity[2]	Modulus of rupture[3]	
		Green	At 12 percent moisture content
		- - - - - - - MPa - - - - - - -	
SOFTWOODS—con.			
Spruce:			
Black (*Pica mariana*)	.38	42.1	74.5
Engelmann (*P. engelmannii*)	.33	32.4	64.1
Red (*P. rubens*)	.37	41.4	74.5
Sitka (*P. sitchensis*)	.37	39.3	70.3
White (*P. glauca*)	.33	34.5	64.8
Tamarack (*Larix laricina*)	.49	49.6	80.0

[1]Based on values given in Forest Products Laboratory (1974) and Markwardt and Wilson (1935).

[2]Based on ovendry weight and green volume.

[3]Results of tests on small, clear straight-grained specimens (1 MPa = 145 psi).

[4]Coast Douglas-fir is defined as Douglas-fir growing in the States of Oregon and Washington west of the summit of the Cascade Mountains, Interior West includes the State of California and all counties in Oregon and Washington east of but adjacent to the Cascade summit. Interior North includes the remainder of Oregon and Washington and the States of Idaho, Montana, and Wyoming. Interior South is made up of Utah, Colorado, Arizona. and New Mexico.

U.S. GOVERNMENT PRINTING OFFICE:1986-724-044/40008

Pesticide Precautionary Statement

Pesticides used improperly can be injurious to humans, animals, and plants. Follow the directions and heed all precautions on the labels.

Store pesticides in original containers under lock and key-out of the reach of children and animals-and away from food and feed.

Apply pesticides so that they do not endanger humans, livestock, crops, beneficial insects, fish, and wildlife. Do not apply pesticides when there is danger of drift, when honey bees or other pollinating insects are visiting plants, or in ways that may contaminate water or leave illegal residues.

Avoid prolonged inhalation of pesticide sprays or dusts; wear protective clothing and equipment if specified on the container.

If your hands become contaminated with a pesticide, do not eat or drink until you have washed. In case a pesticide is swallowed or gets in the eyes, follow the first-aid treatment given on the label, and get prompt medical attention. If a pesticide is spilled on your skin or clothing, remove clothing immediately and wash skin thoroughly.

Do not clean spray equipment or dump excess spray material near ponds, streams, or wells. Because it is difficult to remove all traces of herbicides from equipment, do not use the same equipment for insecticides or fungicides that you use for herbicides.

Dispose of empty pesticide containers promptly. Have them buried at a sanitary land-fill dump, or crush and bury them in a level, isolated place.

NOTE: Some States have restrictions on the use of certain pesticides. Check your State and local regulations. Also, because registrations of pesticides are under constant review by the Federal Environmental Protection Agency, consult your county agricultural agent or State extension specialist to be sure the intended use is still registered.