Approach Rail Transition General Configuration

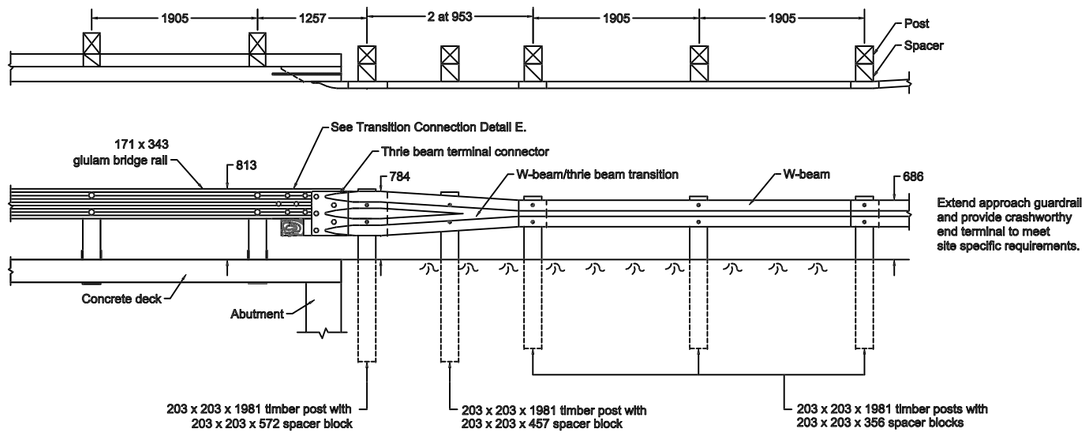

D Steel Transition Plate

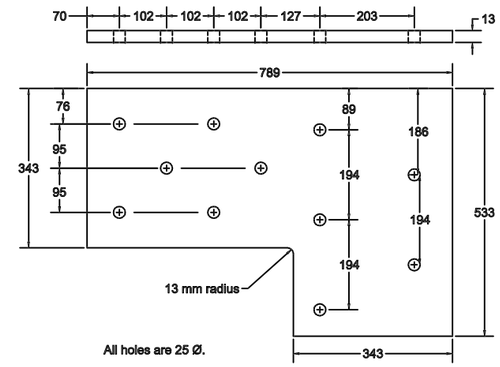

In addition to the notes on Sheet 1, the following apply to the approach rail transition:

17. Thrie beam terminal connector shall be 10 gage. W-beam/thrie beam transition and w-beam shall be 12 gage. All shall comply with the requirements AASHTO M180.

18. W-beam and thrie beam rail splice bolts and post bolts shall comply with AASHTO M180.

E Transition Connection Details

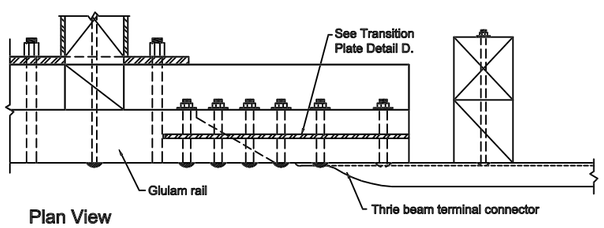

Plan View

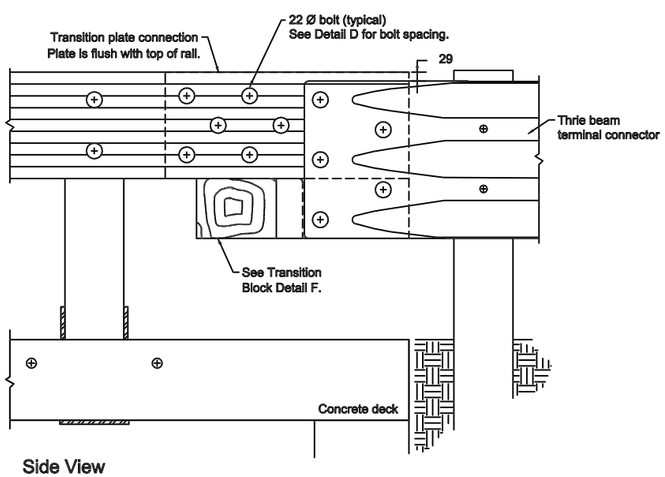

Side View

3 Dimensional View of Transition Connection

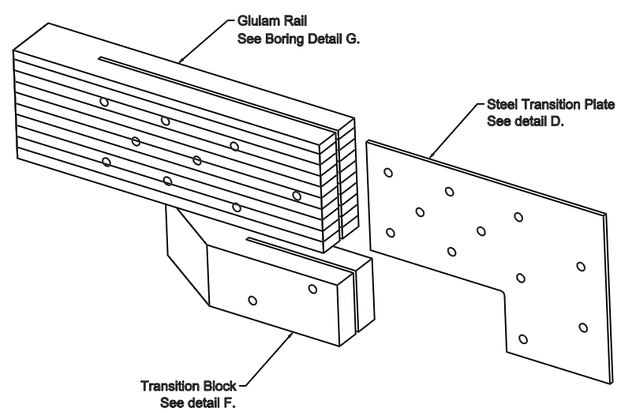

F Transition Block

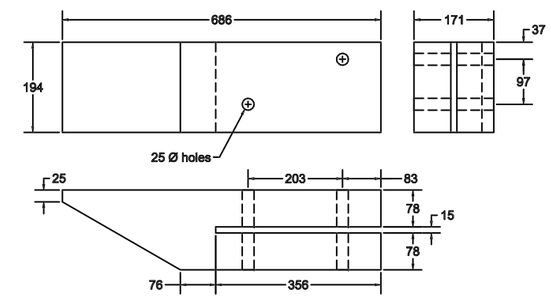

G Transition Glulam Rail Boring Detail

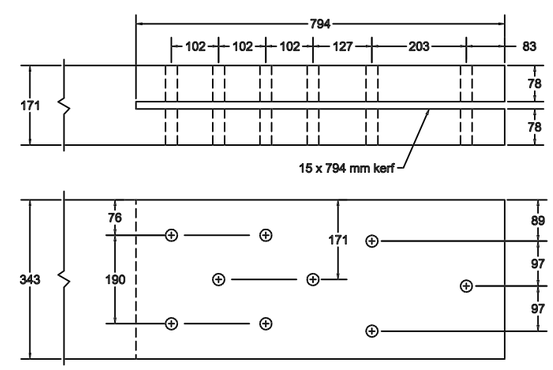

The bridge railings depicted on these drawings were developed and crash tested under a cooperative research agreement between the Midwest Roadside Safety Facility of the University of Nebraska-Lincoln, the USDA Forest Service, Forest Products Laboratory, and the U.S. DOT Federal Highway Administration.

University of Nebraska Lincoln

Crash-Tested Wood Bridge Railings for Concrete Decks

Glulam Timber Rail without Curb
NCHRP 350 Test Level 2 (TL-2)

August 1998

Sheet 2 of 2