Approach Rail Transition General Configuration

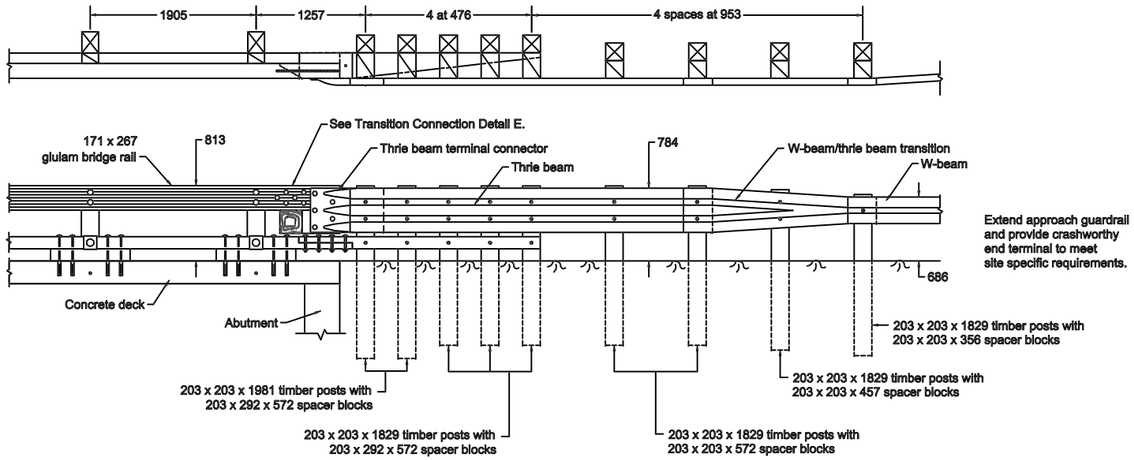

D Transition Block

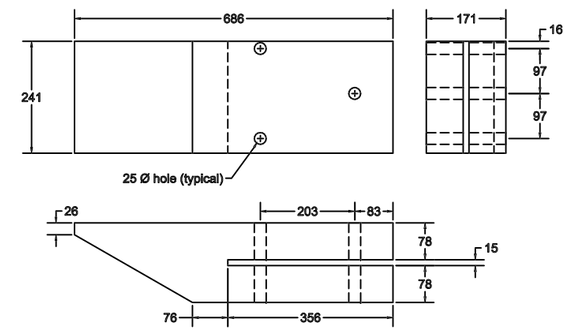

Depth of the transition block is based on a rail depth of 267 mm and surfaced curbs and scuppers (both 140 mm in height). If dimensions of any components increase, the depth of the transition block must be verified and reduced as necessary.

In addition to the notes on Sheet 1, the following apply to the approach rail transition:

16. Thrie beam and thrie beam terminal connector shall be 10 gage. W-beam/thrie beam transition and W-beam shall be 12 gage. All shall comply with requirements of AASHTO M180.

17. W-beam and thrie beam rail splice bolts and post bolts shall comply with AASHTO M180.

E Transition Connection Details

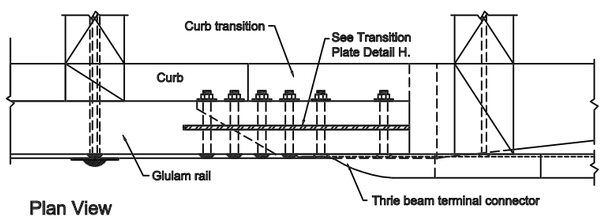

Plan View

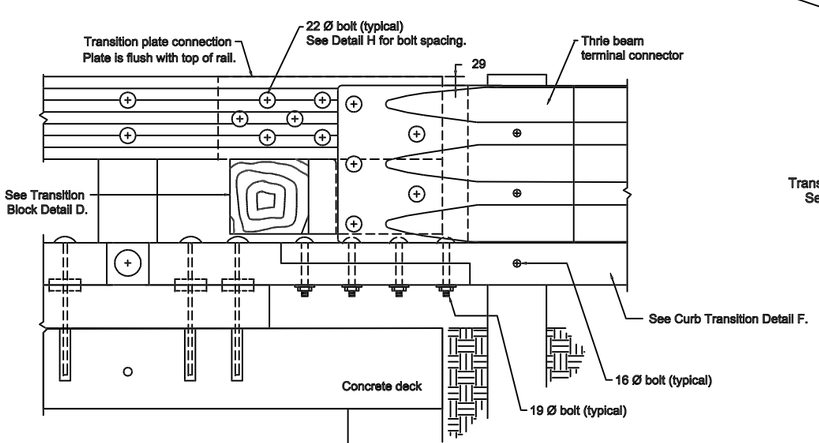

Side View

3 Dimensional View of Transition Connection

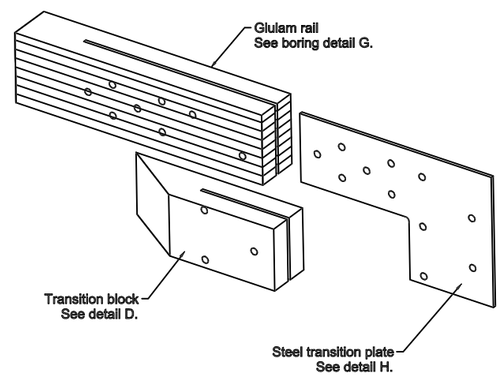

F Curb Transition

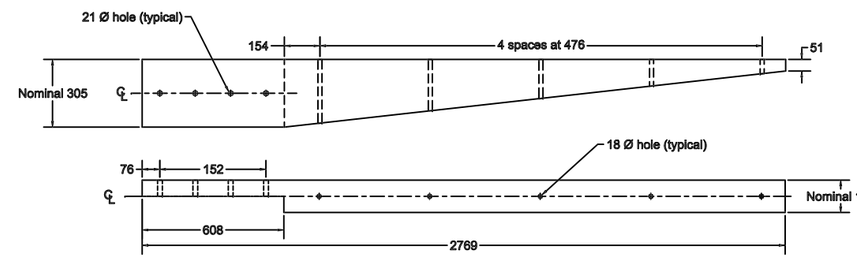

G Transition Glulam Rail Boring Detail

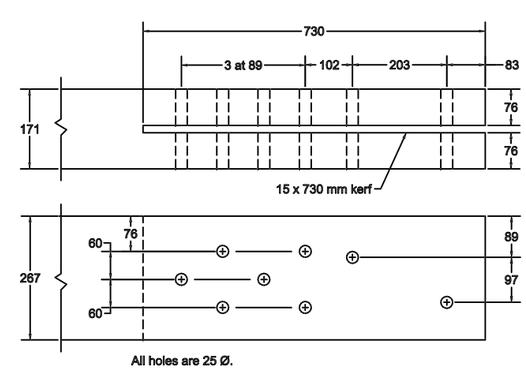

H Steel Transition Plate

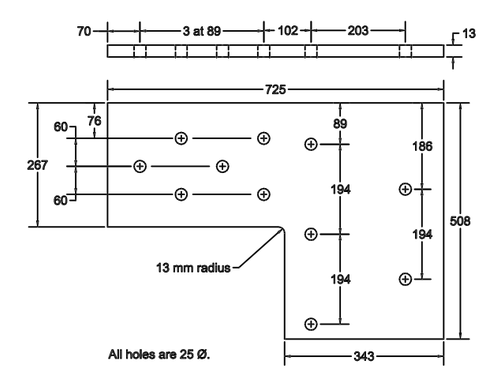

The bridge railings depicted on these drawings were developed and crash tested under a cooperative research agreement between the Midwest Roadside Safety Facility of the University of Nebraska-Lincoln, the USDA Forest Service, Forest Products Laboratory, and the U.S. DOT Federal Highway Administration.

University of Nebraska Lincoln

Crash-Tested Wood Bridge Railings for Concrete Decks

Glulam Timber Rail with Curb NCHRP 350 Test Level 2 (TL-2)	August 1998	Sheet 2 of 2